CODE OF ORDINANCES
CITY OF EAU CLAIRE, WISCONSIN

Current through December 31, 2022

TABLE OF CONTENTS

TITLE 1	**GENERAL PROVISIONS**
TITLE 2	**ADMINISTRATION AND PERSONNEL**
TITLE 3	**REVENUE AND FINANCE**
TITLE 4	**(REPEALED IN ENTIRETY)**
TITLE 5	**BUSINESS LICENSES AND REGULATIONS**
TITLE 6	**ANIMALS**
TITLE 7	**(RESERVED)**
TITLE 8	**HEALTH AND SAFETY**
TITLE 9	**PUBLIC PEACE, MORALS AND WELFARE**
TITLE 10	**VEHICLES AND TRAFFIC**
TITLE 11	**(RESERVED)**
TITLE 12	**(RESERVED)**
TITLE 13	**STREETS AND SIDEWALKS**
TITLE 14	**WATERWORKS**
TITLE 15	**SEWERS AND SEWERAGE**
TITLE 16	**BUILDING AND CONSTRUCTION**
TITLE 17	**SUBDIVISIONS**
TITLE 18	**ZONING**
TITLE 19	**STORMWATER**
	TABLES

Title 1

GENERAL PROVISIONS

Chapters:

1.01 Code Adoption
1.04 General Provisions
1.06 Review of Administrative Determinations
1.08 Public Records
1.12 Ward Boundaries
1.16 General Penalty
1.24 Citations for Ordinance Violations
1.25 Enforcement--Orders--Inspections

Chapter 1.01

CODE ADOPTION

Sections:

1.01.010 Adoption.
1.01.020 Title--Citation--Reference.
1.01.030 Codification authority.
1.01.040 Ordinances passed prior to adoption of the code.
1.01.050 Reference applies to all amendments.
1.01.060 Title, chapter and section headings.
1.01.070 Reference to specific ordinances.
1.01.080 Effect on past actions and obligations.
1.01.090 Effective date.
1.01.100 Constitutionality.

1.01.010 Adoption. Pursuant to the provisions of Section 66.0103 of the Wisconsin Statutes, there is hereby adopted the "Code of Ordinances of the City of Eau Claire", as published by Book Publishing Company, Seattle, Washington. (Ord. 3458 §1, 1974).

1.01.020 Title--Citation--Reference. This code shall be known as the "Code of Ordinances of the City of Eau Claire", and it shall be sufficient to refer to said code as the "Code of Ordinances of the City of Eau Claire" in any prosecution for the violation of any provision thereof or in any proceeding at law or equity. It shall be sufficient to designate any ordinance adding to, amending, correcting, or repealing all or any part or portion thereof as an addition to, amendment to, correction or repeal of the "Code of Ordinances of the City of Eau Claire". Further reference may be had to the titles, chapters, sections, and subsections of the "Code of Ordinances of the City of Eau Claire", and such references shall apply to that numbered title, chapter, section or subsection as it appears in the code. (Ord. 3458 §2, 1974).

1.01.030 Codification authority. This code consists of all the regulatory and penal ordinances and certain of the administration ordinances of the city of Eau Claire, Wisconsin, codified pursuant to the provisions of Section 66. 0103 of the Wisconsin Statutes Annotated. (Ord. 3458 §3, 1974).

1.01.040 Ordinances passed prior to adoption of the code. The last ordinance included in the initial code is Ordinance 3415, passed December 27, 1973. The following ordinances, passed subsequent to Ordinance 3415, but prior to the adoption of this code, are hereby adopted and made a part of this code: Ordinances 3415, 3423, 3424, 3425, 3427, 3431, 3432, 3444, 3445, 3446, 3447 and 3448. (Ord. 3458 §4, 1974).

1.01.050 Reference applies to all amendments. Whenever a reference is made to this code as the "Code of Ordinances of the City of Eau Claire" or to any portion thereof, or to any ordinance of the city of Eau Claire, Wisconsin, the reference shall apply to all amendments, corrections and additions heretofore, now or hereafter made. (Ord. 3458 §5, 1974).

1.01.060 Title, chapter and section headings. Title, chapter, and section headings contained herein shall not be deemed to govern, limit, modify or in any manner affect the scope, meaning, or intent of the provisions of any title, chapter, or section hereof. (Ord. 3458 §6, 1974).

1.01.070 Reference to specific ordinances. The provisions of this code shall not in any manner affect matters of record which refer to or are otherwise connected with ordinances which are therein specifically designated by number or otherwise and which are included within the code, but such reference shall be construed to apply to the corresponding provisions contained within this code. (Ord. 3458 §7, 1974).

1.01.080 Effect on past actions and obligations. Neither the adoption of this code nor the repeal or amendments hereby of any ordinance or part or portion of any ordinance of the city shall in any manner affect the prosecution for violations of ordinances, which violations were committed prior to the effective date hereof, nor be construed as a waiver of any license, fee, or penalty at said effective date due and unpaid under such ordinances, nor be construed as affecting any of the provisions of such ordinances relating to the collection of any such license, fee or penalty, or the penal provisions applicable to any cash deposit in lieu thereof required to be posted, filed, or deposited pursuant to any ordinance and all rights and obligations thereunder appertaining shall continue in full force and effect. (Ord. 3458 §8, 1974).

1.01.090 Effective date. This code shall become effective on the date the ordinance adopting this code as the "Code of Ordinances of the City of Eau Claire" becomes effective. (Ord. 3458 §9, 1974).

1.01.100 Constitutionality. If any section, subsection, sentence, clause, or phrase of this code is for any reason held to be invalid or unconstitutional, such decision shall not affect the validity of the remaining portions of this code. The council hereby declares that it would have passed this code, and each section, subsection, sentence, clause, or phrase thereof, irrespective of the fact that any one or more sections, subsections, sentences, clauses or phrases had been declared invalid or unconstitutional, and if for any reason this code should be declared invalid or unconstitutional, then the original ordinance or ordinances shall be in full force and effect. (Ord. 3458 §10, 1974).

Chapter 1.04

GENERAL PROVISIONS

Sections:

1.04.010 Definitions.
1.04.020 Words and phrases--Meaning.
1.04.030 Acts by agents.
1.04.040 Grammatical interpretation.
1.04.050 Ordinances--Severability.
1.04.060 Ordinances--Effective date.
1.04.065 Reorganization and modernization of Chapter 66 of the Wisconsin Statutes.
1.04.070 Prohibited acts include causing, permitting, etc
1.04.080 Construction.
1.04.090 Ordinances--Repeal shall not revive.
1.04.100 Notice to owners of property.

1.04.110 Publication of ordinances.

<u>1.04.010 Definitions</u>. The following words and phrases, whenever used in the ordinances of the city of Eau Claire, Wisconsin, shall be construed as defined in this section unless from the context a different meaning is intended or unless different meaning is specifically defined and more particularly directed to the use of such words or phrases:

A. "City" means the city of Eau Claire, Wisconsin, or the area within the territorial limits of the city of Eau Claire, Wisconsin, and such territory outside of the city over which the city has jurisdiction or control by virtue of any constitutional or statutory provision.

B. "Computation of time" means the time within which an act is to be done. It shall be computed by excluding the first day and including the last day; and if the last day be Sunday or a legal holiday, as defined by Wisconsin Statutes s. 985.09, that day shall be excluded.

C. "Council" means the city council of the city of Eau Claire, Wisconsin. "All its members" or "all councilmen" means the total number of councilmen as provided by the city under the laws of the state of Wisconsin.

D. "County" means the county of Eau Claire, Wisconsin.

Dm. “Holiday” means the following days: January 1; the last Monday in May; July 4; the first Monday in September; the 4th Thursday in November; December 25; and December 31. For the exclusive purpose of enforcement of parking restrictions, “holiday” shall also mean the following days: the third Monday in January; the third Monday in February; the second Monday in October; November 11; and December 24.

E. "Law" denotes applicable federal law, the constitution and statutes of the state of Wisconsin, the ordinances of the city, and when appropriate, any and all rules and regulations which may be promulgated thereunder.

F. "May" is permissive.

G. "Month" means a calendar month.

H. "Must" and "Shall". Each is mandatory.

I. "Oath" shall be construed to include an affirmation or declaration in all cases in which, by law, an affirmation may be substituted for an oath, and in such cases the words "swear" and "sworn" shall be equivalent to the words "affirm" and "affirmed".

J. "Or" may be read "and" and "and" may be read "or", if the sense requires it.

K. "Ordinance" means a law of the city; provided that a temporary or special law, administrative action, order or directive may be in the form of a resolution.

L. "Owner" applied to a building or land includes any part owner, joint owner, tenant in common, joint tenant or tenant by the entirety of the whole or a part of such building or land.

M. "Person" means natural person, joint venture, joint stock company, partnership, association, club, company, corporation, business, trust, organization, or the manager, lessee, agent, servant, officer or employee of any of them.

N. "Personal property" includes money, goods, chattels, things in action and evidences of debt.

O. "Preceding" and "following" mean next before and next after, respectively.

P. "Property" includes real and personal property.

Q. "Real Property" includes lands, tenements and hereditaments.

R. "Sidewalk" means that portion of a street between the curb line and the adjacent property line intended for the use of pedestrians.

S. "State" means the state of Wisconsin.

T. "Street" includes all streets, highways, avenues, lanes, alleys, courts, places, squares, curbs, or other public ways in this city which have been or may hereafter be dedicated and open to public use, or such other public property so designated in any law of this state.

U. "Tenant" and "occupant", applied to a building or land, includes any person who occupies whole or a part of such building or land, whether alone or with others.

V. "Title of office". Use of the title of any officer, employee, board or commission means that officer, employee, department, board or commission of the city.

W. "Written" includes printed, typewritten, mimeographed or multigraphed.

X. "Year" means a calendar year. (Ord. 6947, 2011; Ord. 5897, 1998; Ord. 3396 §1.25(1), 1973).

1.04.020 Words and phrases--Meaning. All words and phrases shall be construed and understood according to the common and approved usage of the language. Technical words and phrases, and such others as may have acquired a peculiar and appropriate meaning in the law, shall be construed and understood according to such peculiar and appropriate meaning. (Ord. 3396 §1.25(2), 1973).

1.04.030 Acts by agents. When an act is required by an ordinance, the same being such that it may be done as well by an agent as by the principal, such requirement shall be construed as to include all such acts performed by an authorized agent. (Ord. 3396 §1.25(3), 1973).

1.04.040 Grammatical interpretation. The following grammatical rules shall apply in the ordinances of the city:

A. Gender. The masculine gender includes the feminine and neuter genders.

B. Singular and Plural. The singular number includes the plural and the plural includes the singular.

C. Tenses. Words used in the present tense include the past and the future tenses and vice versa, unless manifestly inapplicable.

D. Use of Words and Phrases. Words and phrases not specifically defined shall be construed according to the context and approved usage of the language. (Ord. 3396 §1.25 (4), 1973).

1.04.050 Ordinances--Severability. The provisions of these ordinances are severable. If any part or provision of any section, clause or provision of these ordinances is invalid, or if its application to any person or circumstance is invalid, such invalidity shall not affect other provisions or applications which can be given effect without the invalid provision or application. (Ord. 3396 §1.25(5), 1973).

1.04.060 Ordinances--Effective date. All ordinances shall take effect after passage on the day after their publication in the official city newspaper or at a later date if expressly prescribed. (Ord. 3396 §1.25(6), 1973).

1.04.065 Reorganization and modernization of Chapter 66 of the Wisconsin Statutes. All sections of Chapter 66 of the Wisconsin Statutes enumerated in this code that are affected by the reorganization and modernization of that chapter by 1999 Wisconsin Act 150 shall be amended or modified to conform to that Act, effective January 1, 2001. The city attorney is authorized to insert statutory references in the code that conform to that Act. (Ord. 6103, 2000).

1.04.070 Prohibited acts include causing, permitting, etc. Whenever in the ordinances of the city any act or omission is made unlawful, it shall include causing, allowing, permitting, aiding, abetting, suffering, or concealing the fact of such act or omission. (Ord. 3396 §1.25(7), 1973).

1.04.080 Construction. The provisions of the ordinances of the city, and all proceedings under them, are to be construed with a view to effect their objects and to promote justice. (Ord. 3396 §1.25(8), 1973).

1.04.090 Ordinances--Repeal shall not revive. The repeal of an ordinance shall not repeal the repealing clause of such ordinance or revive any ordinance which has been repealed thereby. (Ord. 3396 §1.25(9), 1973).

1.04.100 Notice to owners of property. In this code of ordinances, whenever notice is required to be given to "owners" or "owners of record" of property, or words of similar import, and state law does not provide otherwise, notice to the owner or owners of property as shown on the current city assessment roll shall be sufficient compliance with such requirement. (Ord. 4436, 1984).

1.04.110 Publication of ordinances. Any ordinance which consolidates, revises or otherwise enacts a comprehensive revision included in the preparation of a code, or part thereof, as provided in sec. 66. 0103, Wisconsin Statutes, need not be published in accordance with sec. 62.11(4)(a), Wisconsin Statutes. Such code, or part thereof, may be adopted by an ordinance referring thereto and may be published in book or pamphlet form in accordance with sec. 66. 0103, Wisconsin Statutes. A copy of the code shall be on file with the City Clerk for public inspection. An opinion as to whether an ordinance in question qualifies for publication hereunder shall be obtained from the City Attorney and shall be filed with the ordinance. (Ord. 4652, 1986).

Chapter 1.06

REVIEW OF ADMINISTRATIVE DETERMINATIONS

Sections:

1.06.010 Legislative purpose.
1.06.020 Review of administrative determinations.
1.06.030 Determinations subject to review.
1.06.040 (Reserved.)
1.06.050 Administrative review board.
1.06.060 Procedure for review.

1.06.010 Legislative purpose. The city of Eau Claire elects not to be governed by the provisions of Chapter 68, Wisconsin Statutes. This election is made pursuant to the provisions of Wis. Stats. s. 68.16. The purpose of this chapter is to afford a constitutionally sufficient, fair, and orderly administrative procedure and review in connection with determinations by city authorities which involve constitutionally protected rights of specific persons who are entitled to due process protection under the 14th Amendment to the United States Constitution, and for which appeal procedures are not already created by other ordinances or statutes. There is no intention to create any new or additional rights to administrative review beyond those already guaranteed by the Constitution. (Ord. 6567, 2005).

1.06.020 Review of administrative determinations. A person aggrieved shall be defined as any person having a substantial interest which is adversely affected by an administrative determination of any official, agent, or employee acting on behalf of the city, as set forth in s. 1.06.030. A person aggrieved by such determination may have it reviewed by following the procedure set forth in s. 1.06.060. (Ord. 6567, 2005).

1.06.030 Determinations subject to review. The following determinations are exclusively reviewable under this section for a fee as stated in the City of Eau Claire Schedule of Fees and Licenses:

A. Determinations made under chapters 2.16, 5.04, 5.24, 5.26, 5.34, 5.42, 5.46, 5.48, 5.52, 5.54, 5.56, 5.60, 6.10, 8.20, 8.32, 9.58, 9.59, 9.60; and sections 5.28.090, 6.08.020, 8.16.070, 13.12.062, and 16.28.090.

B. Determinations made under Wis. Stats. s. 125.12 that allow for a hearing by a committee of city council. (Ord. 7030, 2012; Ord. 6943, 2010; Ord. 6746 §1, 2007; Ord. 6593 §2, 2005; Ord. 6592 §2, 2005; Ord. 6586 §2, 2005; Ord. 6579 §2, 2005; Ord. 6572 §19, 2005; Ord. 6567, 2005).

1.06.050 Administrative review board. A. The Eau Claire city council hereby creates an administrative review board. The board shall consist of 7 persons appointed and approved by the Eau Claire city council. Board members shall be residents of the city of Eau Claire each having a 3 year term. The board shall elect from its membership a chairperson and such other officers as may be necessary for one-year terms. The board may adopt rules of procedure.

B. The administrative review board shall meet as needed to hold hearings within 30 days of the date of filing of an appeal or at such time as agreed upon.

C. The Eau Claire city council hereby duly authorizes the administrative review board to hold hearings and issue decisions under s. 1.06.060 below. Participation by a city council member in the proceedings of the administrative review board shall not disqualify said member from participating in further proceedings before the city council.

D. Appointments of all members shall continue until their successors are appointed.

(Ord. 7474, 2022; Ord. 7193 §1, 2016; Ord. 6752, 2007; Ord. 6746 §2, 2007; Ord. 6567, 2005).

1.06.060 Procedure for review. A. For all administrative determinations subject to review under this ordinance that are governed by s. 125.12, Wis. Stats., the board is designated as a committee of city council and shall follow the procedure for review provided in said statute. Where s. 125.12, Wis. Stats., is silent, the procedures for review shall be as adopted by the board.

B. All other administrative determinations subject to review under this chapter are governed by the procedures listed in subsection C. below and such additional rules adopted by the board.

C. Appeal from determination.

1. Notice of appeal. The administrative determination may be appealed to the administrative review board if the person aggrieved files a written appeal within 30 days of the mailing of the determination. Such appeal shall be filed with the city clerk. The board shall hold a hearing within 30 days of the filing of the appeal, or at such time as agreed upon by both parties. The appellant shall be notified at the address provided on the appeal by registered mail postmarked at least 10 days before the hearing.

2. Hearing. At the hearing, the appellant and the responsible city official or authority may be represented by counsel, may present evidence, and may call and examine witnesses and cross-examine witnesses of the other party. The president of the board shall conduct the hearing. In the absence of the president, the board shall choose by majority vote another member to conduct the hearing. If applicable, the presiding member may administer oaths to witnesses, issue subpoenas and seek advice of counsel. The rules of evidence provided in s. 227.45, Wis. Stats., for administrative proceedings shall be followed. The secretary of the board may receive and mark all exhibits, if any. If either or both parties request that that the hearing be recorded on audio or video tape or requests a stenographic recording, the staff shall make the necessary arrangements but the expense shall be borne by the requesting party, or split equally if requested by both parties. Such request shall be made at least 5 days before the hearing.

3. Decision. The board may issue an oral decision at the time of the hearing. Within 10 days of the completion of the hearing, the aggrieved person may request the board to reduce its decision to written form, which the board shall do within 10 days of receipt. The board shall have the power to affirm or reverse the administrative determination. The board shall have four (4) affirmative votes in order to reverse an administrative determination. Such decisions shall be consistent with applicable law and, when issued in written form, shall be final determinations for the purpose of judicial review.

4. Decisions under s. 125.12, Wis. Stats. Pursuant to s. 125.12, Wis. Stats., the board shall make a report and recommendation to city council. Written arguments supporting the objection to the report shall be filed with the city clerk and forwarded to the city council. Oral arguments supporting the objection may be presented at city council's discretion. No party is entitled to a hearing de novo before the city council. (Ord. 6746 §3, 2007; Ord. 6567, 2005).

Chapter 1.08

PUBLIC RECORDS

Sections:

1.08.010 Definitions.
1.08.020 Duty to maintain records.

1.08.030 Legal custodians.
1.08.040 Public access to records.
1.08.050 Access procedures.
1.08.060 Limitations on right to access.
1.08.070 Destruction of records.
1.08.080 Lesser time, when authorized.
1.08.090 Preservation through reproduction methods.

1.08.010 Definitions. In this chapter, unless the context clearly requires otherwise:

A. "Authority" means any of the following entities having custody of a city record: an office, elected official, agency, board, commission, committee, council, department or public body corporate and politic created by construction, law, ordinance, rule or order; or a formally constituted subunit of the foregoing.

B. "Custodian" means that officer, department head, division head, or employee of the city designated under Section 1.08.030 or otherwise responsible by law to keep and preserve any city records or file, deposit or keep such records in his or her office, or is lawfully in possession or entitled to possession of such public records and who is required by this chapter to respond to requests for access to such records.

C. "Record" means any material on which written, drawn, printed, spoken, visual or electromagnetic information is recorded or preserved, regardless of physical form or characteristics, which has been created or is being kept by an authority. "Record" includes, but is not limited to, handwritten, typed or printed pages, maps, charts, photographs, films, recordings, tapes (including computer tapes), and computer printouts. "Record" does not include drafts, notes, preliminary computations and like materials prepared for the originator's personal use or prepared by the originator in the name of a person for whom the originator is working; materials which are purely the personal property of the custodian and have no relation to his or her office; materials to which access is limited by copyright, patent or bequest; and published materials in the possession of an authority other than a public library which are available for sale, or which are available for inspection at a public library. (Ord. 4328, 1983).

1.08.020 Duty to Maintain Records. A. Except as provided under section 1.08.070, each officer and employee of the city shall safely keep and preserve all records received from his or her predecessor or other persons and required by law to be filed, deposited or kept in his or her office or which are in the lawful possession or control of the officer or employee or his or her deputies, or to the possession or control of which he or she or they may be lawfully entitled as such officers or employees.

B. Upon the expiration of an officer's term of office or an employee's term of employment, or whenever the office or position of employment becomes vacant, each such officer or employee shall deliver to his or her successor all records then in his or her custody and the successor shall receipt therefor to the officer or employee, who shall file said receipt with the city clerk. If a vacancy occurs before a successor is selected or qualifies, such records shall be delivered to and receipted for by the clerk, on behalf of the successor, to be delivered to such successor upon the latter's receipt. (Ord. 4328, 1983).

1.08.030 Legal Custodians. A. Each elected official is the legal custodian of his or her records and the records of his or her office, but the official may designate an employee of his or her staff to act as the legal custodian.

B. Unless otherwise prohibited by law, the city clerk or the clerk's designee shall act as legal custodian for the city council and for any committees, commissions, boards, or other authorities created by ordinance or resolution of the city council.

C. For every authority not specified in subsections A. or B., the authority's chief administrative officer is the legal custodian for the authority, but the officer may designate an employee of his or her staff to act as the legal custodian.

D. Each legal custodian shall name a person to act as legal custodian in his or her absence or in the absence of his or her designee.

E. The legal custodian shall have full legal power to render decisions and to carry out the duties of an authority under subchapter II of Chapter 19, Wisconsin Statutes, and this section. The designation of a legal custodian shall not affect the powers and duties of an authority under this section. (Ord. 4328, 1983).

1.08.040 Public Access to Records. A. Except as provided in section 1.08.060, any person has a right to inspect a record and to make or receive a copy of any record as provided in section 19.35(1), Wisconsin Statutes.

B. Records shall be available for inspection and copying during all regular office hours.

C. If regular office hours are not maintained at the location where records are kept, the records will be available for inspection and copying upon at least 48 hours' advance notice of intent to inspect or copy.

D. A requester shall be permitted to use facilities comparable to those available to city employees to inspect, copy or abstract a record.

E. The legal custodian may require supervision during inspection or may impose other reasonable restrictions on the manner or access to an original record if the record is irreplaceable or easily damaged.

F. A requester shall be charged a fee to defray the cost of locating and copying records as follows:

1. The cost of photocopying shall be as stated in the City of Eau Claire Fees and Licenses Schedule. Other costs may be imposed not to exceed the actual, necessary and direct cost of reproduction and transcription of the record.

2. If the form of a written record does not permit copying, the actual and necessary cost of photographing and photographic processing shall be charged.

3. The actual full cost of providing a copy of other records not in printed form on paper, such as films, computer printouts and audio- or video-tapes, shall be charged.

4. If mailing or shipping is necessary, the actual cost thereof shall also be charged.

5. There shall be no charge for locating a record unless the actual cost therefor exceeds $50.00, in which case the actual cost shall be determined by the legal custodian and billed to the requester. Such actual cost shall be derived by multiplying the actual hourly wage of the employee or employees conducting the search, including fringe benefits, by the amount of time spent in the search.

6. The legal custodian shall estimate the cost of all applicable fees and may require a cash deposit adequate to assure payment, if such estimate exceeds $5.00.

7. Elected and appointed officials of the city of Eau Claire shall not be required to pay for public records they may reasonably require for the proper performance of their official duties.

8. The legal custodian may provide copies of a record without charge or at a reduced charge where he or she determines that waiver or reduction of the fee is in the public interest.

G. Pursuant to Section 19.34, Wisconsin Statutes, and the guidelines therein listed, each authority shall adopt, prominently display and make available for inspection and copying at its offices, for the guidance of the public, a notice containing a description of its organization and the established times and places at which the legal custodian from whom, and the methods whereby, the public may obtain information and access to records in its custody, make requests for records, or obtain copies of records, and the costs thereof. This subsection does not apply to members of the city council. (Ord. 6363 §1, 2002; Ord. 4331, 1983; Ord. 4328, 1983).

1.08.050 Access Procedures. A. A request to inspect or copy a record shall be made to the legal custodian. A request shall be deemed sufficient if it reasonably describes the requested record or the information requested. However, a request for a record without a reasonable limitation as to subject matter or length of time represented by the record does not constitute a sufficient request. A request may be made orally, but a request must be in writing before an action to enforce the request is commenced under Section 19.37, Wisconsin Statutes. Except as provided below, no request may be refused because the person making the request is unwilling to be identified or to state the purpose of the request. No request may be refused because the request is received by mail, unless prepayment of a fee is required under Section 1.08.040 F.6. A requester may be required to

show acceptable identification whenever the requested record is kept at a private residence or whenever security reasons or federal law or regulations so require.

B. Each custodian, upon request for any record, shall, as soon as practicable and without delay, either fill the request or notify the requester of the authority's determination to deny the request in whole or in part and the reasons therefor. If the legal custodian, after conferring with the city attorney, determines that a written request is so general as to be unduly time consuming, the party making the request may first be required to itemize his or her request in a manner which would permit reasonable compliance.

C. A request for a record may be denied as provided in section 1.08.060. If a request is made orally, the request may be denied orally unless a demand for a written statement of the reasons denying the request is made by the requester within 5 business days of the oral denial. If a written request is denied in whole or in part, the requester shall receive a written statement of the reasons for denying the request. Every written denial of a request shall inform the requester that if the request for the record was made in writing, then the determination is subject to review upon petition for a writ of mandamus under section 19.37(1), Wisconsin Statutes, or upon application to the attorney general or a district attorney. (Ord. 4328, 1983).

1.08.060 Limitations on Right to Access. A. As provided by section 19.36, Wisconsin Statutes, the following records are exempt from inspection under this section:

1. Records specifically exempted from disclosure by state or federal law;

2. Any record relating to investigative information obtained for law enforcement purposes if federal law or regulations requires exemption from disclosure or if exemption from disclosure is a condition to receipt of aids by the state;

3. Computer programs, although the material used as input for a computer program or the material produced as a product of the computer program is subject to inspection; and

4. A record or any portion of a record containing information qualifying as a common law trade secret.

B. As provided by section 43.30, Wisconsin Statutes, public library circulation records are exempt from inspection under this section.

C. In responding to a request for inspection or copying of a record which is not specifically exempt from disclosure, the legal custodian, after conferring with the city attorney, may deny the request, in whole or in part, only if he or she determines that the harm to the public interest resulting from disclosure would outweigh the public interest in full access to the requested record. Examples of matters for which disclosure may be refused include, but are not limited to, the following:

1. Records obtained under official pledges of confidentiality which were necessary and given in order to obtain the information contained in them.

2. Records of current deliberations after a quasi-judicial hearing.

3. Records of current deliberations concerning employment, dismissal, promotion, demotion, compensation, performance, or discipline of any city officer or employee, or the investigation of charges against a city officer or employee, unless such officer or employee consents to such disclosure.

4. Records concerning current strategy for crime detection or prevention.

5. Records of current deliberations or negotiations on the purchase of city property, investing of city funds, or other city business whenever competitive or bargaining reasons require nondisclosure.

6. Financial, medical, social or personal histories or disciplinary data of specific persons which, if disclosed, would be likely to have a substantial adverse effect upon the reputation of any person referred to in such history or data.

7. Communications between legal counsel for the city and any officer, agent or employee of the city, when advice is being rendered concerning strategy with respect to current litigation in which the city or any of its officers, agents or employees is or is likely to become involved, or communications which are privileged under section 905.03, Wisconsin Statutes.

D. If a record contains information that may be made public and information that may not be made public, the custodian of the record shall provide the information that may be made public and delete the information that may not be made public from the record before release. The custodian shall confer with the city attorney prior to releasing any such record and shall follow the guidance of

the city attorney when separating out the exempt material. If in the judgment of the custodian and the city attorney there is no feasible way to separate the exempt material from the nonexempt material without unreasonably jeopardizing nondisclosure of the exempt material, the entire record shall be withheld from disclosure. (Ord. 4328, 1983).

1.08.070 Destruction of Records. A. City officers may destroy the following non-utility financial records of which they are the legal custodians and which are considered obsolete, after completion of any required audit by the bureau of municipal audit or an auditor licensed under chapter 442 of the Wisconsin Statutes, but not less than 7 years after payment or receipt of any sum involved in the particular transaction, unless a shorter period has been fixed by the state public records board pursuant to section 16.61(3)(e), Wisconsin Statutes, and then after such shorter period:

1. Bank statements, deposit books, slips and stubs;
2. Bonds and coupons after maturity;
3. Cancelled checks, duplicates and check stubs;
4. License and permit applications, stubs and duplicates;
5. Official bonds;
6. Payrolls and other time and employment records of personnel included under the Wisconsin Retirement System (subject to approval of the city manager);
7. Receipt forms;
8. Special assessment records (subject to approval of city manager);
9. Vouchers, requisitions, purchase orders and all other supporting documents pertaining thereto;

B. City officers may destroy the following utility records of which they are the legal custodians and which are considered obsolete after completion of any required audit by the bureau of municipal audit or an auditor licensed under chapter 442 of the Wisconsin Statutes, subject to state public service commission regulations, but not less than 7 years after the record was effective unless a shorter period has been fixed by the state public records board pursuant to section 16.61(3)(e) Wisconsin Statutes, and then after such a shorter period, except that water stubs, receipts of current billings and customers' ledgers may be destroyed after two years.

1. Contracts;
2. Excavation permits;
3. Inspection records;
4. Vouchers and supporting documents pertaining to charges not included in plant accounts;
5. Other utility records with the prior written approval of the Public Service Commission.

C. City officers may destroy the following records of the city but not less than 3 years after the incurring of the liability which is the subject of the record:

1. Parking tickets;
2. Miscellaneous accounts receivable.

D. City officers may destroy the following records of which they are the legal custodian and which are considered obsolete, but not less than 7 years after the record was effective unless another period has been set by statute, and then after such a period, or unless a shorter period has been fixed by the state public records board pursuant to section 16.61(3)(e), Wisconsin Statutes, and then after such a shorter period.

1. Assessment rolls and related records, including board of review minutes;
2. Contracts and papers relating thereto;
3. Correspondence and communications;
4. Election notices;
5. Financial reports other than annual financial reports;
6. Insurance policies;
7. Justice dockets;
8. Oaths of office;
9. Reports of boards, commissions, committees and officials duplicated in the official council minutes;
10. Resolutions and petitions;

11. Voter registration cards;
12. Uniform traffic citations;
13. Police department firearms scores;
14. City ordinance citations;
15. Library patron and circulation records;
16. Other records of the city not enumerated above.

E. Unless notice is waived by the state historical society, at least 60 days' notice shall be given the state historical society prior to the destruction of any record as provided by section 19.21(4)(a), Wisconsin Statutes.

F. Any tape recordings of a governmental meeting of the city, made by the city, may be destroyed, erased or reused no sooner than 90 days after the minutes of the meeting have been approved and published, if the purpose of the recording was to make minutes of the meeting.

G. Any tape recordings of telephone calls, radio transmissions or other methods of communication recorded in the city's communications center may be erased, destroyed or reused after 125 days.

H. Closed call records associated with the computer aided dispatch (CAD) system in the city's communication center and mobile data computer (MDC) data logs may be deleted and destroyed after 120 days.

I. No record may be destroyed at any time after the receipt of a request for inspection or copying of the record under s. 19.35(1), Wis. Stats., until after the request is granted or until at least 60 days after the date that the request is denied or, if the requester is an incarcerated person, until at least 90 days after the date that the request is denied. If the city receives written notice that an action relating to a record has been commenced under s. 19.37, Wis. Stats., the record may not be destroyed until after the order of the court in relation to such record is issued and the deadline for appealing that order has passed or, if appealed, until after the order of the court hearing the appeal is issued. If the court orders the production of any record and the order is not appealed, the record may not be destroyed until after the request for inspection or copying is granted. (Ord. 5843, 1998; Ord. 5737, 1997; Ord. 5357, 1993; Ord. 5131, 1991; Ord. 4563, 1985; Ord. 4328, 1983).

1.08.080 Lesser time, when authorized. This chapter shall not be construed to authorize the destruction of any public record after a period less than prescribed by statute or state administrative regulations. (Ord. 4328, 1983).

1.08.090 Preservation through reproduction methods. Any city officer, or the director of any department or division of city government may, subject to the approval of the city manager, keep and preserve public records in his or her possession by means of microfilm, optical disk, electronic format, or other reproduction method technology permits. Such records shall meet the standards for reproduction set forth in section 16.61, Wisconsin Statutes, and shall be considered original records for all purposes. Such records shall be preserved along with other files of the department or division and shall be open to public inspection and copying according to the provisions of state law and of Section 1.08.040 through 1.08.060. (Ord. 6606, 2005; Ord. 4328, 1983).

Chapter 1.12

WARD BOUNDARIES

(RESERVED)

Chapter 1.16

GENERAL PENALTY

Sections:

1.16.010 General code penalty.
1.16.020 Aiding and abetting ordinance violations.
1.16.030 Ordinance violation not misdemeanor.
1.16.040 Imprisonment when.
1.16.050 Fine payment--Indigents unable to pay.

1.16.010 General code penalty. Where no penalty is otherwise provided, any person who violates any provision of this code shall be subject to a forfeiture of not less than ten dollars nor more than five hundred dollars, plus the costs of prosecution, and in default of payment of such forfeiture and the costs of prosecution, shall be imprisoned in the county jail until payment of such forfeiture and costs of prosecution is made, but not for more than ninety days. Each day of violation shall constitute a separate offense. (Ord. 6034, 2000; Ord. 4902 §1, 1989; Ord. 3396 §1.25(10)(part), 1973).

1.16.020 Aiding and abetting ordinance violations. A. Whoever is concerned in the commission of an ordinance violation is a principal and may be charged with and convicted of the commission of the ordinance violation although he or she did not directly commit it and although the person who directly committed it has not been convicted or has been convicted of some other ordinance violation based on the same act.

B. A person is concerned in the commission of an ordinance violation if he or she:

1. Directly commits an ordinance violation;
2. Intentionally aids and abets the commitment of an ordinance violation; or
3. Is a party to a conspiracy with another to commit an ordinance violation or advises, hires, counsels or otherwise procures another to commit an ordinance violation. Such a party is also concerned in the commission of any other ordinance violation which is committed in pursuance of the intended ordinance violation and which under the circumstances is a natural and probable consequence of the intended ordinance violation. This paragraph does not apply to a person who voluntarily changes his or her mind and no longer desires that the ordinance violation be committed and notifies the other parties concerned of his or her withdrawal within a reasonable time before the commission of the ordinance violation so as to allow the others also to withdraw. (Ord. 4902 §3, 1989; Ord. 4732, 1987).

1.16.030 Ordinance violation not a misdemeanor. No violation of any ordinance of the city shall be, or be construed to be, a misdemeanor, nor shall imprisonment be imposed as a punishment for violation of any ordinance of the city except in the event of a failure of the defendant to pay the forfeiture imposed by the court, any other provision of the general ordinances of the city to the contrary notwithstanding. (Ord. 3396 §1.25(10)(b), 1973).

1.16.040 Imprisonment when. When a forfeiture is imposed for the violation of any ordinance of the city or any section thereof the court may also order the defendant to pay the cost of the action and to be imprisoned until such forfeiture and costs are paid, in no case, however, to exceed six months, and the court may also issue an execution against the property of the defendant for the forfeiture and costs. (Ord. 3396 §1.25 (10)(c), 1973).

1.16.050 Fine payment--Indigents unable to pay. This chapter shall not be construed to authorize imprisonment of a defendant for failure to pay forfeiture or costs solely because the defendant is indigent and cannot forthwith pay his fine in full. (Ord. 3396 §1.25(10)(d), 1973).

Chapter 1.24

CITATIONS FOR ORDINANCE VIOLATIONS

Sections:

1.24.010 Citation method adopted.
1.24.020 Form and provisions of citations.

1.24.030 Deposit schedule.
1.24.040 Issuance of citations.
1.24.050 Procedure.
1.24.060 Nonexclusivity of enforcement over remedies.

1.24.010 Citation method adopted. Pursuant to s. 66.119, Wisconsin Statutes, the city authorizes the citation method of enforcement for the violation of any city ordinance contained in this code, except for violations of chapters 341 through 348 of the Wisconsin Statutes. (Ord. 4904 §1, 1989; Ord. 4898 §1, 1989; Ord. 4840 §1, 1988; Ord. 4817 §2, 1988; Ord. 4630 §1, 1986; Ord. 4553 §2, 1985; Ord. 4334 §1, 1983; Ord. 4327 §1, 1983; Ord. 4246 §1, 1982; Ord. 4234 §1, 1981; Ord. 4220 §1, 1981).

1.24.020 Form and provisions of citations. The citation shall contain the information prescribed by s. 66.119 of the Wisconsin Statutes. (Ord. 6090 §1, 2000; Ord. 5124, 1991; Ord. 3794 §1(part), 1977).

1.24.030 Deposit schedule. A. Any violation of the code of ordinances of the city of Eau Claire, except as stated in subsections B, C, Cm, Cn, or D, shall be classified as a Class 1 violation. A cash deposit consisting of a forfeiture of $60.00 plus applicable costs, penalties, and assessments as prescribed by Wisconsin Statutes, shall be required for each violation of this classification.

B. The following violations of the code of ordinances shall be Class 2 violations and shall require a cash deposit consisting of a forfeiture of $125.00 plus applicable costs, penalties, and assessments as prescribed by Wisconsin Statutes:

1. Any violation of s. 5.28.010, adopting Chapter 125 of the Wisconsin Statutes, except as contained in paragraphs C. and E. below;
2. Chapter 9.77, fraud on residential landlords;
3. Section 16.08.120 A., rooming house license procedures;
4. Section 8.32.120 D., prohibited dumping;
5. Sections 5.28.030 and 5.28.040, conditions on alcohol beverage violations;
6. Chapter 9.61, trespass;
7. Chapter 9.63, damage to property;
8. Chapter 9.36, public nuisance;
9. Section 9.52.045, public excessive intoxication.

C. The following violations of the code of ordinances shall be Class 3 violations and shall require a cash deposit consisting of a forfeiture of $200.00 plus applicable costs, penalties, and assessments as prescribed by Wisconsin Statutes:

1. The following sections of Chapter 125 of the Wisconsin Statutes as adopted by section 5.28.010 of the code of ordinances:
   a. 125.04;
   b. 125.07(1)(a)1. and 2.;
   c. 125.07(2);
   d. 125.07(3).
2. Chapter 8.06, adult-oriented establishments.
3. Section 9.56.020, prohibiting the harboring of juveniles without parental consent.
4. Section 9.56.075 A., loud parties and gatherings.

Cm. The following violations of the code of ordinances shall be Class 4 violations and shall require a cash deposit consisting of a forfeiture of $300.00 plus applicable costs, penalties, and assessments as prescribed by Wisconsin Statutes:

1. Chapter 9.62, retail theft;
2. Chapter 16.32, occupancy violation, fire code.

Cn. The following violation of the code of ordinances shall be a Class 5 violation and shall require a cash deposit consisting of a forfeiture of $1.00 plus applicable costs, penalties, and assessments as prescribed by Wisconsin Statutes:

1. Chapter 9.37, possession of marijuana.

D. The maximum deposit required under the foregoing table for persons 12 to 18 years of age shall be $50.00 unless otherwise designated by Wisconsin Statute.*

E. Penalties for underage alcohol or identification related violations of Chapter 125 of the Wisconsin Statutes shall be as prescribed by the Revised Uniform State Deposit Schedule adopted by the Wisconsin Judicial Conference pursuant to s. 778.25(3) of the Wisconsin Statutes.

F. The above deposits shall be made in cash, money order or certified check to the clerk of county court who shall provide a receipt therefor. (Ord. 7357 §2, 2020; Ord. 7308 §2, 2018; Ord. 7297 §3, 2018; Ord. 7010 §2, 2012; Ord. 6853 §1, 2008; Ord. 6468, 2004; Ord. 6302, 2002; Ord. 6219, 2001; Ord. 6090 §2, 2000; Ord. 5488, 1995; Ord. 5363, 1993; Ord. 5352 §1, 1993; Ord. 5319, 1993; Ord. 5247 §1, 1992; Ord. 5205, 1992; Ord. 5189, 1991; Ord. 5064 §1, 1990; Ord. 4964, 1989; Ord. 4940, 1989; Ord. 4898 §2; 1989; Ord. 4888 §3; 1989; Ord. 4841, 1988; Ord. 4840 §2, 1988; Ord. 4817 §3, 1988; Ord. 4775, 1987; Ord. 4630 §2, 1986; Ord. 4334 §2, 1983; Ord. 4327 §2, 1983; Ord. 4226 §2, 1981; Ord. 4220 §2, 1981; Ord. 4174 §1, 1981; Ord. 4072 §10, 1980; Ord. 3936 §3, 1978; Ord. 3794 §1(part), 1977).

---

* Per Wis. Stat. §938.343, a 17-year old shall be assessed a total amount of $50 when the offense is one specific to juveniles; otherwise, a 17-year old shall be assessed a forfeiture no greater than that charged to an adult for the same offense.

1.24.040 Issuance of citations. A. Law enforcement officers may issue citations authorized under this chapter.

B. The following officials are authorized to issue citations for violations of those ordinances which are directly related to their official responsibilities:

1. Superintendent of inspections;
2. City-county health director;
3. Fire chief;
4. Superintendent of streets and sidewalks;
5. Director of community services
6. Superintendent of schools;
7. Police chief;
8. Library Director;
9. City Clerk;
10. Director of finance;
11. Director of engineering

C. Such officials may delegate their authority to issue citations to their subordinates. (Ord 7202, 2016; Ord. 6469, 2004; Ord. 4406, 1983; Ord. 4334 §1, 1983; Ord. 4233 §1, 1981; Ord. 4013 §7, 1979; Ord. 3947, 1978; Ord. 3919, 1978; Ord. 3974 §1(part), 1977).

1.24.050 Procedure. Section 66.0113, Wisconsin Statutes, relating to violators' options and procedure on default, is adopted and incorporated in this chapter by reference. (Ord. 3794 §1(part), 1977).

1.24.060 Nonexclusivity of enforcement over remedies. A. The adoption of this chapter shall not preclude the city council from adopting any other ordinance or providing for the enforcement of any other law or ordinance relating to the same or other matter.

B. The issuance of a citation hereunder shall not preclude the city or any authorized officer from proceeding under any other ordinance or law or by any other enforcement method to enforce any ordinance, regulation, or order. (Ord. 3794 §1(part), 1977).

Chapter 1.25

ENFORCEMENT--ORDERS--INSPECTIONS

Sections:

1.25.010 Enforcement order.
1.25.020 Re-inspection fee.

1.25.010 Enforcement order. Whenever any officer or official designated under s. 1.24.040 determines that a violation of this code exists, that person may, in addition to any other available enforcement options, issue a written order directing that all violations shall be corrected within the period of time specified. (Ord. 6859 §1, 2008).

1.25.020 Re-inspection fee. A. For each compliance reinspection performed, any person who shall fail or neglect to comply with any such lawful order issued for any violation of this code shall be assessed a fee, as stated in the City of Eau Claire Fees & Licenses Schedule.

B. Re-inspection shall constitute a service, and any unpaid fee for said service shall be entered in the tax roll as a special charge against each lot or parcel of land so served, as provided in Wis. Stats. s. 66.0627. (Ord. 7221 §2, 2017; Ord. 6859 §1, 2008).

Title 2

ADMINISTRATION AND PERSONNEL

Chapters:

2.04 City Government
2.06 Sustainability Advisory Committee
2.08 City Council
2.12 City Attorney
2.16 City Clerk
2.20 Elections--Officials
2.24 Department of Finance
2.28 Fire Department
2.36 Police Department
2.40 Department of Community Services
2.45 Department of Engineering
2.48 Board of Review
2.50 Utility Appeals Board
2.52 Board of Health
2.54 Department of Community Development
2.56 Plan Commission
2.60 Transit Commission
2.64 City Waterways and Parks Commission
2.65 Landmarks
2.66 Bicycle/Pedestrian Advisory Committee
2.67 Housing Opportunities Commission
2.68 Officers' Bonds
2.70 Department of Human Resources
2.72 Employees' Regulations
2.76 Employees' Retirement System
2.80 Municipal Band
2.84 Cemetery Regulations
2.88 Emergency Preparedness
2.92 City Procurement

Chapter 2.04

CITY GOVERNMENT

Sections:

2.04.010 Reorganization--Aldermanic districts--Council salaries.

2.04.011 City council--Duties and responsibilities.
2.04.012 City manager; qualifications, selection, removal.
2.04.013 Powers of city manager, appointments.
2.04.015 City officials--Election.
2.04.020 Officers-Election.
2.04.030 Reorganization--Purpose.
2.04.040 City departments.
2.04.050 Appointment to boards and commissions.
2.04.060 Acting city manager.

2.04.010 Reorganization--Aldermanic districts--Council salaries. A. The government of the City of Eau Claire is reorganized under Chapter 64 of the Wisconsin Statutes providing for a city manager plan.*

B. The City Council shall be composed of eleven members to be nominated and elected for three-year terms. The members of the City Council shall be comprised of the following:

1. One member elected at large every third year who shall be the Council President and shall preside at all meetings of the City Council. Except, the Council President shall be elected to a single two-year term in 2012, then, beginning in 2014 and continuing thereafter, shall again be elected to three-year terms.

2. Five members elected every third year beginning with the year 2009 from and by the electors of districts apportioned according to law.

3. Five members elected at large every third year beginning with the year 2010.

4. The aldermanic districts from which the five members of the council shall be elected pursuant to the provisions of subsection B. 2. are established as follows:

Aldermanic District One consisting of Wards 8, 10, 11, 12, 13, 16, 34, 36, 37, 44, 47, 54, 62 and 73.

Aldermanic District Two consisting of Wards 15, 18, 25, 27, 28, 35, 38, 39, 43, 48, 49, 53, 58, 67, 69, 70, 71, 72, 74, 75, 76 and 77.

Aldermanic District Three consisting of Wards 3, 4, 17, 20, 21, 24, 26, 30, 33, 56, 57, 63 and 66.

Aldermanic District Four consisting of Wards 7, 14, 19, 22, 23, 29, 40, 41, 42, 45, 52, 55, 59, 60, 64, 65 and 68.

Aldermanic District Five consisting of Wards 1, 2, 5, 6, 9, 31, 32, 46, 50, 51 and 61.

C. The salaries of the members of the city council shall be $3,000 per year for each council member and $3,600 for the council president.

(Charter Ord. 7493, 2022; Charter Ord. 7484, 2022; Charter Ord. 7468, 2022; Charter Ord. 7442, 2021; Charter Ord. 7429, 2021; Charter Ord. 7424, 2021; Charter Ord. 7404, 2020; Charter Ord. 7397, 2020; Charter Ord. 7385, 2020; Charter Ord. 7372, 2020; Charter Ord. 7365, 2020; Charter Ord. 7356, 2019; Charter Ord. 7343, 2019; Charter Ord. 7329, 2019; Charter Ord. 7305, 2018; Charter Ord. 7293, 2018; Charter Ord. 7259, 2017; Charter Ord. 7234, 2017; Charter Ord. 7160, 2015; Charter Ord. 7106, 2014; Charter Ord. 7009, 2012; Charter Ord. 6990, 2011; Charter Ord, 6980, 2011; Charter Ord, 7015, 2011; Ord. 6824 §1, 2008; Ord. 6601, 2005; Charter Ord. 6181, 2001; Ord. 5935, 1999; Charter Ord. 5466 §§1, 3, 1995; Charter Ord. 5286 §1, 1992; Charter Ord. 5285, 1992; Charter Ord. 5157 §1, 1991; Ord. 4697, 1986; Charter Ord. 4688, 1986; Charter Ord. 3875 §1, 1978; Ord. 3626, 1976; Prior code §1.01 I).

---

* Editor's Note. The City Council/City Manager form of government was approved by referendum vote of electors in 1949.

2.04.011 City council--Duties and responsibilities. The city council shall possess and exercise all legislative and general ordinance powers imposed and conferred by general law or special charter. The council shall not have the power to enact special executive or administrative orders, it being the intent of ss. 64.01 to 64.15, Wisconsin Statutes, (city manager plan) to separate the legislative and executive powers of city government. (Ord. 5521 §1, 1995).

2.04.012 City Manager; qualifications, selection, removal. The Council shall engage for an indefinite term a city manager who shall have charge of the executive side of the city government and who shall be responsible for the efficiency of its administration. (Ord. 5521 §2, 1995).

2.04.013 Powers of city manager, appointments. A. The city manager shall be the chief executive officer of the city and head of the city administration and shall possess and exercise all the executive and general administrative powers imposed and conferred by general law or special charter.

B. The city manager shall have the power to create minor administrative offices and positions and to discontinue such offices and positions according to the city manager's judgment of the needs of the city.

C. The city manager shall have the power to appoint all heads of departments, all subordinate city officials, and all city employees and to remove such appointees at any time their services or the conduct of their offices becomes unsatisfactory to the city manager. (Ord. 5521 §3, 1995).

2.04.015 City officials--Election. A. Primary--when required. Pursuant to the provisions of ss. 8.11(1)(b) and 66.01, Wis. Stats., whenever the number of candidates filing nomination papers for a city office exceeds two times the number to be elected to such office, a primary to nominate candidates for the office shall be held in accordance with the provisions of the Wisconsin Statutes.

B. Not eligible for more than one office. No candidate for city office is eligible to appear on the ballot for more than one city office at the same election. (Charter Ord. 5321 §§1, 2, 1993).

2.04.020 Officers--Election. The election of officers under the form of government so adopted shall be held as provided by law upon the first Tuesday in April next succeeding the adoption of the charter ordinance codified in Sections 2.04.010 through 2.04.040, 2.12.010, Chapter 2.16, Sections 2.24.010, 2.24.020, 2.28.010, 2.32.010, 2.36.010 through 2.36.070 and Chapter 2.40. (Prior code §1.01 II).

2.04.030 Reorganization--Purpose. It is recognized that a sound organization pattern is necessary for the efficient operation of any business, public or private; and that in city government an organizational plan is needed which will fix responsibility and authority and place similar and related functions in the proper department. It is further recognized that there must be a limited span of direct control for effective administration and that departmental organization established under Section 2.04.040 provides for such control and the most efficient administrative organization. (Charter Ord. 3778 §2, 1977; Prior code §1.03 I).

2.04.040 City departments. The following departments are created:

Community Services	Finance
Engineering	Planning and development
Police	Human resources
Fire	City attorney

(Charter Ord. 7201 §1, 2016; Charter Ord. 4491 §1, 1984; Charter Ord. 3778 §3, 1977).

2.04.050 Appointment to boards and commissions. A. Except as provided under subsection B., appointments to all boards, commissions, committees or other similar entities to which appointments are made by the city council, including those established by state law or city ordinance or resolution, shall be made by the city council, following receipt of a recommendation thereon of an advisory committee comprised of the city council president and 2 members of the city council.

B. The appointment of a member of the city council to a board or commission shall not be subject to the provisions contained in subsection A. but shall be made directly by the city council. (Charter Ord. 6935 §1, 2010; Charter Ord. 5733 §2, 1997; Charter Ord. 4705 §2, 1987).

2.04.055 Board and Commission Remote Attendance. (Charter Ord. 7137, 2015-Denied).

2.04.060 Acting city manager. The city manager may, in writing filed in the office of the city clerk, appoint an acting city manager who, during the absence or disability of the city manager, shall perform the duties and responsibilities of the city manager. When so appointed, the acting city manager shall have the same powers, obligations and authority as the city manager. The acting city manager may participate as a member with full power and authority on those boards, committees, commissions or other bodies of which the city manager is a member, unless, in the opinion of the acting city manager, such participation is in conflict with the principal duties and responsibilities of the acting city manager. (Charter Ord. 4862 §2, 1988).

Chapter 2.06

SUSTAINABILITY ADVISORY COMMITTEE

Sections:

2.06.010 Declaration of public policy.
2.06.015 Definitions.
2.06.020 Creation and purpose.
2.06.030 Committee governance.
2.06.035 Officers.
2.06.040 Duties and responsibilities.
2.06.050 Meetings and agendas.
2.06.060 Staffing.

2.06.010 Declaration of public policy. The City Council finds that the needs of the present should be met without compromising the ability of future generations to meet their own needs. To that end, the protection, stewardship, improvement, and promotion of the environment is a public necessity and is required in the interest of the health, prosperity, safety, and welfare of the Eau Claire community for present and future generations.

2.06.015 Definitions. In this chapter: A. "City manager" means the city manager or the designee of the manager.

B. "Committee" means the Sustainability Advisory Committee.

C. "Sustainability Chapter" means the Sustainability Chapter of the City of Eau Claire's Comprehensive Plan, as adopted and amended from time to time.

D. "Sustainable" means meeting the needs of the present without compromising the ability of future generations to meet their own needs. (Ord. 7215, 2017)

2.06.020 Creation and purpose. A sustainability advisory committee is hereby created to provide advice to the city council on sustainability related issues to help achieve the objectives of the city council's Strategic Plan, the Comprehensive Plan or the city manager's work plan. (Ord. 7215, 2017)

2.06.030 Committee governance. A. The committee shall consist of nine members, all of whom shall be appointed pursuant to subsection 2.04.050 A. for staggered 3-year terms.

B. The members of the committee shall be selected from among community members having a demonstrated interest in environmental stewardship; sustainable business practices, development or technology; green building and design; renewable energy; energy efficient transportation; and recycling and waste management. To the extent possible, members appointed shall represent a diverse range of interest and expertise in sustainability, economic backgrounds and interests, and ethnic and cultural affiliations, including educators and students in the aforementioned fields.

C. Appointments of all members shall continue until their successors are appointed and qualified.

D. Any vacancy on the committee shall be filled in the same manner as the original appointment for the residue of the unexpired term.

E. Unless otherwise provided by city ordinance, the committee may adopt bylaws

covering rules and procedure. In the absence thereof, the committee shall abide by such rules of order and procedure customarily used by other city committees and commissions. (Ord. 7215, 2017; Ord. 7084, 2014)

2.06.035 Officers. At the first meeting of the committee after initial appointments have been made, the committee shall elect from its membership a chairperson, vice-chairperson and such other officers as may be designated by the committee for one year terms. (Ord. 7215, 2017; Ord. 7084, 2014)

2.06.040 Duties and responsibilities. The committee shall be accountable to the city council. The committee shall provide advice to the city council that reflects community values on sustainable policy and practices relative to the community's sustainable environment, including natural resources, energy, food, waste, hazardous materials and pollution. Annually, a designated staff liaison shall develop a draft work plan for the committee, which shall be based on the city council's Strategic Plan, the Comprehensive Plan or the city manager's work plan. The staff liaison may work with the committee until a mutually agreeable work plan is complete. The work plan may include new ideas or projects not specifically enumerated in the city council's Strategic Plan, the Comprehensive Plan or the city manager's work plan. Staff shall evaluate new ideas or projects for their efficacy and the expenditure of city resources, including staff time. Annually, the staff liaison shall present the committee's work plan to the city council at a regularly scheduled city council meeting for approval. Progress on the work plan may be reviewed mid-year with the city council or the city manager. (Ord. 7215, 2017)

2.06.050 Meetings and agendas. A. The committee shall hold regular meetings not less than quarterly each year, and may hold special meetings at the call of the chair, any three committee members, or the city council. All such meetings are subject to the provisions of ss. 19.83 through 19.85, Wis. Stats., the Wisconsin Open Meetings Law.

B. Pursuant to s. 19.84 (1), Wis. Stats., the committee chairperson or the designee of the chairperson shall prepare an agenda for all meetings of the committee in consultation with the city manager. An item may be placed on the agenda by the chair, the city manager, or any two members of the committee. (Ord. 7215, 2017)

2.06.065 Staffing. The city manager shall appoint a staff designee and such other staff deemed necessary to assist the committee. (Ord. 7215, 2017; Ord. 7077, 2013)

Chapter 2.08

CITY COUNCIL

Sections:

2.08.010 Meetings--Regular--Times.
2.08.020 Meetings--Special.
2.08.030 Voting rules.
2.08.040 Officer election.
2.08.050 Meetings--Public.
2.08.060 Meetings--Order.
2.08.065 Meetings—Attendance from remote location.
2.08.070 Votes--Called and recorded.
2.08.075 Agenda.
2.08.080 Order of business.
2.08.090 Suspension of rules.
2.08.095 Reconsideration.
2.08.100 Resolutions and motions in writing.
2.08.110 Resolutions--Introduction and passage.

2.08.120 Ordinances--Introduction and passage.
2.08.130 Ordinances--Reading.
2.08.140 Ordinances--Numbering.
2.08.150 Board of public works--Council to act as.

2.08.010 Meetings--Regular--Times. A. The regular legislative meetings of the city council shall be held in the council chambers of the city hall on the second and fourth Tuesdays of each month beginning at 4:00 p.m. The council shall also meet for the purpose of holding hearings, discussions, and the conducting of other public business, on the Mondays preceding said Tuesdays beginning at 7:00 p.m. The council may meet at other public places within the city. By resolution, the date and time of any such meeting may be changed or the meeting may be cancelled. The council may adjourn from time to time.

B. The provisions of subsection A shall not prevent the city council from meeting outside the limits of the city with the legislative body of another unit of government on matters of mutual interest and concern. (Ord. 4728, 1987; Ord. 4521, 1984; Ord. 3713 §1, 1977; Ord. 3699 §1, 1976; Ord. 3183 §I, 1970; Prior code §1.02(a)).

2.08.020 Meetings--Special. Special meetings may be called by the president of the council, the city manager, or any two members of the council and shall be held in the council chamber, or at such other public place within the city as determined by the council. No other business shall be transacted at a special meeting except as specified in the notice of such meeting, unless all members are present and no objection is made. Special meetings may be called only by written notice served upon each member personally, or by leaving such notice at his usual abode, or place of business, at least six hours before the meeting. Such notice shall contain a statement of the business for which the meeting is called. (Ord. 5530, 1995; Ord. 3183 §II, 1970; Prior code §1.02(b)).

2.08.030 Voting rules. A majority of the council shall constitute a quorum, and a majority vote of all the members of the council shall be necessary to adopt any ordinance or resolution, except where a greater number is required by law. (Prior code §1.02(c) 1).

2.08.040 Officer election. At the meeting of the council held on the third Tuesday in April the council shall elect a president pro tem for the ensuing year. (Ord. 5403, 1994; prior code §1.02(c) 2).

2.08.050 Meetings--Public. Except as otherwise provided by Section 19.85 of the Wisconsin Statutes, all meetings of the council, whether regular or special, shall be open to the public. (Prior code §1.02(c) 3).

2.08.060 Meetings--Order. The president shall preserve order during the sessions of the council, decide all points of order, subject to appeal to the council, and in the absence of any rule or provision of law upon any matter of business, the council shall be governed by Robert's Rules of Order. (Prior code §1.02(d)).

2.08.065 Meetings—Attendance from remote location. A. No member shall be allowed to vote by proxy, nor shall meetings be conducted telephonically, electronically, or vitually unless a special or emergency meeting is held.

1. A “special meeting” shall be a meeting as provided in s. 2.08.020 and an “emergency meeting” shall be a meeting held during a declared local emergency under Wisconsin Statutes s. 323.11, called as a virtual meeting due to local emergency by the city manager as head of emergency government pursuant to s. 2.88.010 and confirmed by the council president, or directed to be virtual by resolution adopted by city council as it determines necessary for public health and safety prior to any specific meeting or for a time period not to exceed the emergency conditions or in any event 90 days, unless extended by subsequent resolutions. Any such telephonic, electronic or virtual meeting must be noticed and held in a manner providing the public the greatest notice and access to hear and observe as practicable, consistent with the emergency conditions and compliant with the Open Meetings Law.

B. No member of the Council shall communicate electronically with another member of the Council during a meeting on any matter on the meeting agenda, unless the electronic communication is saved and available under the Public Records Law and unless such communication does not violate the Open Meetings Law. (Charter Ord. 7390, 2020; Charter Ord. 7138, 2015)

2.08.070 Votes--Called and recorded. An "aye" and "no" vote shall be called and recorded on the vote upon every ordinance and resolution, and may be taken upon any other matter when requested by a councilman. (Prior code §1.02(3)).

2.08.075 Agenda. An agenda shall be prepared for all meetings of the city council by the city manager. The city manager shall advise the council president, or other council member presiding over the meeting, of the items on the agenda. An item may be placed on the agenda by the city manager, council president, or any other council member. An item recommended for placement on an agenda may be removed from the agenda by the city manager or council president. If the city manager or council president removes an item from the agenda, the item shall be restored to the agenda upon the request of two or more council members. (Ord. 5734, 1997; Ord. 5509, 1995; Ord. 5273, 1992).

2.08.080 Order of business. The order of business at all city council meetings shall, unless otherwise agreed, be as follows:

A. Pledge of allegiance;
B. Roll call;
C. Approval of minutes;
D. Consent agenda;
E. General matters to come before the city council;
F. Resolutions;
G. Ordinances;
H. Other matters that may be properly considered by the city council.

The city council may convene in closed session at any time, upon proper notice, for appropriate purposes. (Ord. 4102, 1980).

2.08.090 Suspension of rules. These rules, or any of them, may be temporarily suspended at any meeting by vote of two-thirds of the number of members present. The vote upon suspension of rules shall be by "ayes" and "noes" and shall be recorded. (Ord. 5735, 1997; prior code §1.02(g)).

2.08.095 Reconsideration. Any member who voted with the prevailing side on any question may move for a reconsideration of the vote immediately following the vote or at the next succeeding regular meeting of the council. If a motion to reconsider is defeated, it may not again be presented to the council. (Ord. 5792, 1998).

2.08.100 Resolutions and motions in writing. All resolutions and motions introduced or made shall be in writing. (Prior code §1.02(h)).

2.08.110 Resolutions--Introduction and passage. Resolutions may be introduced and passed; and resolutions introduced at a previous meeting may be put on their passage. (Prior code §1.02(i)).

2.08.120 Ordinances--Introduction and passage. Ordinances may be introduced and ordinances introduced at a previous meeting may be put in their passage. Ordinances may be introduced and passed at the same meeting upon suspension of the rules. (Prior code §1.02(j)).

2.08.130 Ordinances--Reading. When a request for a reading is made by a member of the city council, an ordinance shall be read by the clerk upon its introduction and a second time when put for final passage. Unless such a request is made, the reading shall be dispensed with. (Prior code §1.02(k)).

2.08.140 Ordinances--Numbering. All ordinances shall be numbered consecutively. Where an ordinance would have the effect of amending, altering or adding to the code of the general ordinances of the city it shall so recite, stating the section number so affected. When practicable the city attorney shall, from time to time, insert and consolidate every general ordinance passed since the adoption of the code in its proper and appropriate place therein and shall then affix its proper section number and the same shall thereafter be referred to by said section number. Until so consolidated in the code, ordinances shall be referred to by their original numbers. (Prior code §1.02(1)).

2.08.150 Board of public works--Council to act as. The duties and powers of the board of public works shall be exercised by the city council pursuant to Section 62.14 of the Wisconsin Statutes. (Charter Ord. 3778 §4, 1977; Prior code §1.08).

Chapter 2.12

CITY ATTORNEY

Sections:

2.12.010 Duties imposed.
2.12.020 City attorney--Suits.

2.12.010 Duties imposed. The city attorney shall perform the duties imposed upon him by statutes and ordinances. (Prior code §1.03 III (b)).

2.12.020 City attorney--Suits. A. The city attorney is authorized to bring appropriate actions against any persons, firms or corporations in the following cases without specific or further authorization to do so:

1. To collect delinquent taxes or indebtedness due and owing the city;
2. To cause warrants to be issued and served in ordinance violation cases;
3. To cause summonses to be issued for collection of forfeitures or fines in ordinance violation cases. (Charter Ord. 3778 §5, 1977; Ord. 3204 §1, 1971; prior code §1.19)

Chapter 2.16

CITY CLERK

Sections:

2.16.010 Duties imposed.
2.16.020 Licenses--Payment of taxes and other obligations.
2.16.040 Issuance of certain licenses and permits.

2.16.010 Duties imposed. The city clerk shall perform the duties imposed upon him or her by statutes and ordinances. (Charter Ord. 4491 §2,1984; Prior code §1.03 III (a)).

2.16.020 Licenses--Payment of taxes and other obligations. A. The following are conditions precedent to the issuance by the city clerk or inspections division of any license or permit provided under the code of ordinances of the city of Eau Claire:

1. The payment of all personal property taxes and room taxes imposed pursuant to Ch. 3.20 of these ordinances, all forfeitures or judgments resulting from conviction for violation of any Eau Claire ordinance, except moving traffic violations, and all other claims or judgments due and owing to the city of Eau Claire at the time of the application for such license or permit from any of the following:

a. The applicant; or

b. A person on whose behalf the applicant files an application; or

c. A person having an ownership interest in property upon which the license or permit will be utilized.

2. The payment of all taxes, forfeitures, claims or judgments, as described in paragraph 1., relating to the property or business previously licensed, if the new license is granted consequent or conditionally upon the sale or transfer of the business or stock in trade or furnishings or equipment of the premises, or the sale or transfer of the ownership or control of a corporation.

B. No license or permit application shall be granted until all required payments have been made.

C. Appeal from determinations made under this section shall be made to the administrative review board under the procedures specified in ch. 1.06. (Ord. 6572 §1, 2005; Ord. 5511, 1995; Ord. 5115 §§1, 2, 1991; Ord. 5109 §1, 1990; Ord. 3757, 1977; Ord. 3303 §1,1972; prior code §1.03 III (a)).

2.16.040 Issuance of certain licenses and permits. In addition to those licenses and permits which are required to be issued by the city clerk under the provisions of the city ordinances, the clerk shall have full power and authority to issue licenses and permits on behalf of the city-county health department. (Ord. 6840, 2008; Ord. 4552, 1985).

Chapter 2.20

ELECTIONS

Sections:

2.20.010 Elections.
2.20.020 Officials.

2.20.010 Elections. Conduct. Elections held within the city shall be conducted in accordance with the provisions of the Wisconsin Statutes, particularly Chapters 5 through 12 thereof, except as may be otherwise provided in this chapter. (Ord. 5113, 1991; Prior code §1.10(1)).

2.20.020 Officials. A. Appointment. Pursuant to the provisions of Wisconsin Statutes s. 7.30(1), the number of inspectors for each polling place is reduced to 5. The city council may provide for the appointment of additional inspectors whenever more than one voting machine is used or where wards are combined under Wisconsin Statutes s. 515(6)(b). The resulting number of inspectors shall be an odd number, and political parties shall be represented as provided by Wisconsin Statutes s. 7.30(2). The city council may, by resolution, reduce the number of election officials to no fewer than 3, and may modify or rescind any similar previous action. The city clerk, or designee, shall have the discretion to hire election officials to work less than a full day.

B. Compensation. The compensation of election officials shall be as fixed and provided by the official pay plan of the city as adopted by the city council. (Ord. 6330, 2002; Ord. 5113, 1991; Prior code §1.10(2)).

Chapter 2.24

DEPARTMENT OF FINANCE

Sections:

2.24.010 Department created.
2.24.020 Director of finance--Appointment and duties.
2.24.030 Central equipment and stores agency--Established.
2.24.040 Agency--Purpose.

2.24.050 Agency--Jurisdiction.
2.24.060 Agency--Inventory system.
2.24.070 Agency--Officer responsible.
2.24.080 Agency--Rental basis.
2.24.090 Agency--Rental charges.
2.24.100 Agency--Sale of equipment.
2.24.110 Agency--Equipment replacement.
2.24.120 Agency--Additional equipment purchase.
2.24.130 Agency--Operational procedures institute.
2.24.140 Agency--Accounts segregated.

2.24.010 Department created. The department of finance is created and shall be under the supervision of a director of finance. (Charter Ord. 4491, §4, 1984; Charter Ord. 3778 §7(part), 1977; Prior code §1.03 IV (part)).

2.24.020 Director of finance--Appointment and duties. A. The city manager shall appoint a director of finance whose duties may, in addition thereto, be to head one or more of said divisions.

B. The director shall supervise the department of finance and shall be responsible for the financial planning, reporting and controlling of the financial affairs of the city.

C. The supervision of one or more of the divisions of the department may be held by the same person upon the determination of the city manager.

D. The duties of the heads of each division shall be as prescribed by statutes or ordinances. Further duties shall be as fixed by the director of finance and approved by the city manager.

E. The city, pursuant to s. 66.01, Wisconsin Statutes, elects not to be governed by s. 62.09 (1)(a), Wisconsin Statutes, providing for the appointment of a comptroller and provides that the statutory duties and responsibilities of the comptroller shall be performed by the treasurer. (Charter Ord. 4491, §5 1984; Charter Ord. 3778 §7 (part), 1977; Prior code §1.03 IV (part)).

2.24.030 Central equipment and stores agency--Established. The "central equipment and stores agency" of the city is created and established. Its operational effective date shall be from January 1, 1954, and to the extent that the same has been instituted and in operation prior to the adoption of the ordinance codified in this section, is approved and affirmed. (Prior code §1.17(part)).

2.24.040 Agency--Purpose. The purpose of said agency is to provide a sound and accurate guide to the efficiency and ultimate cost to the city of its rolling, mobile, vehicular and other equipment and services. It shall be the function of such agency to acquire, maintain and furnish rolling, mobile, vehicular and other equipment and services to the several city departments for their use. It is the opinion of the council that to best make such determination a central agency shall be created, and that regulation by ordinance is essential. (Prior code §1.17(A)).

2.24.050 Agency--Jurisdiction. It is the intent of the ordinance codified in this chapter, among other things to provide, and it is so directed, that such rolling, mobile, vehicular equipment, and all other equipment incidental to the maintenance of the same now owned by the city, together with any such equipment hereafter acquired, be placed in and under the control of said agency, excluding therefrom equipment of the fire department. (Prior code §1.17(B)).

2.24.060 Agency--Inventory system. It is further directed that a centralized inventory system and operation be established. Such will consist of the purchase and storing in quantities of commodities, materials and supplies to be drawn upon by all city departments. (Prior code §1.17(C)).

2.24.070 Agency--Officer responsible. The director of community services, under the general supervision of the city manager, shall be in full and complete charge of and be held responsible for the operation of the central equipment and stores agency and all manner of things under its jurisdiction, including, but not limited to, all rolling and mobile equipment, and all equipment incidental thereto, including the building(s) or improvements wherein the rolling or mobile equipment shall be maintained or stored. (Ord. 7202, 2016; Prior code §1.17(D)).

2.24.080 Agency--Rental basis. The use of equipment or the building(s) or the improvements by any department, or any person(s) shall be on a strict rental basis per mile, hour, week or month, as may be determined and calculated to be sufficient, to provide the necessary cost of operating, repairing and maintaining the equipment and building(s) including depreciation on said equipment. (Prior code §1.17(E)).

2.24.090 Agency--Rental charges. Rental charges shall be collected or charged to the various departments of city administration, individuals, persons, agencies, or other governmental agencies for the use of the equipment, and the money or charge, when collected, shall be credited to the central equipment and stores agency, and on behalf of which fund, records will be kept by the director of finance separate and segregated, and in a fund distinct and apart from all other funds of the city. The actual segregation of cash from the cash of the general fund of the city shall be left to the discretion of the director of finance. (Charter Ord. 4491 §6, 1984; Charter Ord. 3778 §12(part), 1977; prior code §1.17(F)).

2.24.100 Agency--Sale of equipment. In the event that any of the items of equipment or things hereinbefore referred to become undesirable or uneconomical to operate or maintain, and upon the recommendation of the director of community services, the same shall be disposed of by sale, in accordance with the laws and regulations governing disposal of city-owned equipment, and any funds realized by the sale shall be credited to the fund referred to in Section 2.24.090. (Ord. 7202, 2016; Prior code §1.17(G)).

2.24.110 Agency--Equipment replacement. Replacement of rental equipment, found to be necessary, and to be used for the purpose herein specified, must be paid for from any cash balance in the fund, referred to in Section 2.24.090, not otherwise encumbered, provided such additional new equipment generally replaces equipment disposed of, or to be disposed of. It is not the intent of this section that an exact replacement be made but only that a piece of equipment be purchased to fulfill the same purpose of the proposed equipment replaced. (Prior code §1.17(H)).

2.24.120 Agency--Additional equipment purchase. Additional equipment, to be used for increasing or augmenting the number of units on hand, must be approved by the city manager and funds therefor shall be provided, by appropriation, by the city council. (Prior code §1.17 (I)).

2.24.130 Agency--Operational procedures instituted. Accounting and operational procedures of the central inventory shall be designed and installed by the director of finance and be subject to approval of the city manager. (Charter Ord. 4491 §7, 1984; Charter Ord. 3778 §12(part), 1977; prior code §1.17(K)).

2.24.140 Agency--Accounts segregated. Rental charges for each piece of equipment shall be sufficient to reimburse the central equipment and stores agency fund for all costs of operating and maintaining said equipment, including a reasonable charge for depreciation of the equipment. The director of finance shall segregate by use of the proper accounts that portion of rentals earned representing depreciation charged off. Those earnings so segregated shall be used only for the purchase of replacement equipment. (Charter Ord. 4491 §8, 1984; Charter Ord. 3778 §12 (part), 1977; prior code §1.17(L)).

Chapter 2.28

FIRE DEPARTMENT

Sections:

2.28.010 Supervision.
2.28.020 Organization.

2.28.030 Temporary employees.
2.28.040 Salaries--Classifications.
2.28.060 Response outside of city limits.

2.28.010 Supervision. The fire department shall be under the supervision of the fire chief who shall be responsible for the protection of life and property against fire, the prevention and extinguishment of fires and the removal of fire hazards. The fire chief shall be responsible for the care and maintenance of all property and equipment of his department. (Prior code §1.13 VI).

2.28.020 Organization. The fire department shall consist of a chief appointed by the board of police and fire commissioners and such subordinate officers and positions as now are or may be created by the city council and such number of ordinary members as the city council now deems or may deem necessary for the proper and efficient operation of the department. (Prior code §3.15(a)).

2.28.030 Temporary employees. The city manager may employ additional help for temporary and special emergency cases. (Prior code §3.15(b)).

2.28.040 Salaries--Classifications. Salaries and classifications are governed by Sections 2.72.080 through 2.72.120. (Prior code §3.15(c)).

2.28.060 Response outside of city limits. The fire department is authorized to respond to fire calls outside the corporate limits of the city whenever, in the discretion of the chief of the fire department, or in his absence, the commanding officer, the safety of the city or any part thereof is not endangered by reason of an existing fire or other emergency. (Ord. 4175 §2, 1981; Prior code §3.21(c)).

Chapter 2.36

POLICE DEPARTMENT

Sections:

2.36.010 Department organization.
2.36.015 Oath of office.
2.36.020 Temporary employees.
2.36.030 Salaries--Classifications.
2.36.050 Uniform allowance.
2.36.070 Department supervision.
2.36.080 Reserve officers.
2.36.090 Airport security police.
2.36.095 Fingerprinting; fee.
2.36.100 Fine payments--Transmittal to treasurer.
2.36.110 Disposal of abandoned property.

2.36.010 Department organization. The police department shall consist of a chief appointed by the board of police and fire commissioners and such subordinate officers and positions as now are or may be created by the city council and such number of ordinary members as the city council now deems or may deem necessary for the proper and efficient operation of that department (Ord. 4264 §1, 1982).

2.36.015 Oath of office. Each person appointed as a police officer shall take and file the official oath as prescribed by Section 19.01, Wisconsin Statutes, before entering into the official duties of a police officer. (Ord. 4058, 1980).

2.36.020 Temporary employees. The city manager may employ additional help for temporary and special emergency cases. (Prior code §3.01(b)).

2.36.030 Salaries--Classifications. Salaries and classifications are governed by Sections 2.72.080 through 2.72.120. (Prior code §3.01(c)).

2.36.050 Uniform allowance. The city council shall annually, at the time of preparing the municipal budget, determine and by resolution prescribe the amount of uniform allowance to be made to the members of the police department. (Prior code §3.01(e)).

2.36.070 Department supervision. The police department shall be under the supervision of the police chief who shall be the commanding officer of the police force and responsible for the enforcement of law and order. He shall be responsible for the care and maintenance of all property of his division. (Prior code §1.03 VII).

2.36.080 Reserve officers. A. The chief of police may appoint reserve officers pursuant to Section 62.09(1) and 64.11(4) of the Wisconsin Statutes, at an annual salary of one dollar per year.

B. The duties of the reserve officers for and within the city shall be as set forth by the chief of police and Section 60.54 and 62.09(13) of the Wisconsin Statutes. The reserve officers shall be entitled to have and retain the same fees allowed constables of towns under Section 60.55 of the Wisconsin Statutes for similar services. (Ord. 3980 §1, 1979).

2.36.090 Airport security police. A. The chief of police may appoint airport security police, upon terms and conditions approved by the chief of police.

B. The duties and powers of the airport security police shall be as set forth by the Federal Aviation Administration. (Ord. 3980 §2, 1979).

2.36.095 Fingerprinting; fee. A fee as stated in the City of Eau Claire Fees and Licenses Schedule shall be charged to persons for whom the police department performs the service of fingerprinting at the request of the person. The police department may establish rules and regulations governing such fingerprinting service, including the time and place for fingerprinting, and may limit or terminate such service. (Ord. 6363 §2, 2002; Ord. 6006, 1999).

2.36.100 Fine payments--Transmittal to treasurer. A. The police department is authorized to accept deposits of forfeitures incurred because of parking violations and other traffic violations under this code.

B. Receipts in triplicate shall be issued upon each deposit so made, one of which shall be delivered to the payor, one to the city treasurer and one shall be retained by the police department.

C. Said receipts shall be numbered consecutively and shall contain the name of the payor and pertinent data of the violation.

D. Transmittal of deposits so made shall be made to the city treasurer each day, and the amount of the same shall be credited to the general revenue fund. (Ord. 3980 §3, 1979; Prior code §3.02).

2.36.110 Disposal of abandoned property. A. Lost money or goods; notice. Except as provided in section 2.36.110 E., if a person finds $25 or more or any goods having a value of at least $25 but less than $100, and if the owner of the money or goods is unknown, the finder shall, within 5 days after finding the money or goods, give a written notice of the found money or goods to the police department. The police department shall post a notice of the found money or goods in 2 public places in the city.

B. Notice and appraisal. Except as provided in section 2.36.110 E., any person finding lost goods within the city having a value of $100 or more shall give a written notice of the found goods to the police department within 15 days after finding the goods and cause a class 2 notice under ch. 985, Wisconsin Statutes, of the found goods to be published in the county. If no person who is entitled to the goods appears to claim the goods, the finder shall, within 2 months after finding the goods and

before using the goods to their injury, procure an appraisal of the goods by the police department. The appraisal shall be certified by the police chief and filed in the police department.

C. Restitution. If the owner of lost money or goods appears within 90 days after notice is given to the police department under section 2.36.110 A. or B. and makes out his or her right to the money or goods, he or she shall have restitution of the money or goods or the value of the money or goods upon his or her paying all the costs and charges on the money or goods, including a reasonable compensation to the finder for the finder's trouble.

D. Finder's rights. If no owner of lost money or goods appears within 90 days after notice is given under section 2.36.110 A. or B., the finder of the money or goods shall be the owner of the lost money or goods.

E. Money or goods found by public officials, employes or agents.

1. Notwithstanding section 2.36.110 A. and B., if an official, employe or agent of the city finds $25 or more or any goods having a value of at least $25 while acting within the scope of his or her official duties, employment or agency, he or she shall transfer custody of the found money or goods to the police department. The police department shall post a notice of the found money or goods in 2 public places in the city, village or town.

2. If the owner of lost money or goods appears within 90 days after the notice is posted under section 2.36.110 E. 1., and makes out his or her right to the found money or goods, he or she shall have restitution of the money or goods or the value of the money or goods upon paying all of the costs and charges on the money or goods. If no owner of lost money or goods appears within 90 days after the notice is posted under section 2.36.110 E. 1., the found money or goods shall become the property of the city. (Ord. 5689, 1997; Ord. 4680, 1986; Ord. 3980 §3, 1979; Ord. 4264, 1982; Ord. 4289, 1982; prior code §3.02).

Chapter 2.40

DEPARTMENT OF COMMUNITY SERVICES

Sections:

2.40.010 Department created.
2.40.020 Director appointed.
2.40.030 Divisions designated.
2.40.040 Public works board and director.

2.40.010 Department created. The Department of Community Services is created.

2.40.020 Director appointed. The city manager shall appoint a director of community services whose duties may, in addition thereto, be to head one or more of the divisions in the department.

2.40.030 Divisions designated. A. The division of the department of community services shall be as established by the city manager.

B. The supervision of one or more of the divisions of the department may be held by the same person upon the determination of the city manager.

2.40.040 Public works board and director. The city council shall continue to act as a board of public works. The director of community services shall have supervision of the department and shall be responsible for the applicable functions thereof, as assigned and upon the determination of the city manager. (Ord. 7202 §2, 2016)

Chapter 2.45

DEPARTMENT OF ENGINEERING

Sections:

2.45.010 Department created.
2.45.020 Director appointed.
2.45.030 Divisions designated.
2.45.040 Public works board and director.

2.45.010 Department created. The department of engineering is created.

2.45.020 Director appointed. The city manager shall appoint a director of engineering whose duties may, in addition thereto, be to head one or more of the divisions in the department.

2.45.030 Divisions designated. A. The division of the department of engineering shall be as established by the city manager.

B. The supervision of one or more of the divisions of the department may be held by the same person upon the determination of the city manager.

2.45.040 Public works board and director. The city council shall continue to act as a board of public works. The director of engineering shall have supervision of the department and shall be responsible for the applicable functions thereof, as assigned and upon the determination of the city manager. (Ord. 7202 §3, 2016)

Chapter 2.48

BOARD OF REVIEW

Sections:

2.48.010 Creation and Purpose.
2.48.020 Definitions
2.48.030 Board Governance
2.48.040 Officers
2.48.050 Duties and Responsibilities.
2.48.060 Confidentiality of Financial Information.

2.48.010 Creation and Purpose. A Board of Review is hereby created to carry out responsibilities related to the assessment of real property as provided for in 70.46 through 70.503, Wis. Stats., or successor statute.

2.48.020 Definitions. In this chapter: A. "Board" means the Board of Review.
B. "City manager" means the city manager or his or her designee.
C. "City clerk" means the city clerk or deputy city clerk.

2.48.030 Board Governance. A. The Board shall consist of seven (7) regular members; the city manager, city clerk, two (2) City Council members and three (3) at-large members. In addition, one (1) additional City Council member and two (2) additional at-large members shall serve as alternate members in the event that a regular member is absent or has a conflict of interest.

B. City Council members shall be appointed annually on the third Tuesday in April pursuant to subsection 2.04.050 B for 1-year terms.

C. At-large members shall be appointed pursuant to subsection 2.04.050 A. for staggered 3-year terms.

D. The at-large members of the Board shall be selected from among city residents with particular emphasis on residents with experience in or knowledge of real estate, law, construction, or finance.

E. Appointments of all members shall continue until their successors are appointed and qualified.

F. Any vacancy on the Board shall be filled in the same manner as the original appointment for the residue of the unexpired term.

G. Each member of the Board shall receive no additional salary or compensation for the duties and services rendered and performed as a member of such board.

2.48.040 Officers. A. At the first meeting of the Board after initial appointments have been made, the Board shall elect from its membership a chairperson and a vice-chairperson. The Chairperson shall have met the mandatory training requirements under 70.46 (4) Wis. Stats., or successor statute.

B. The Board, at its first annual meeting held as provided by law, shall meet not fewer than two hours on the first meeting day. Such meeting shall occur, at a minimum, seven (7) days after the assessment roll is open for examination.

2.48.050 Duties and Responsibilities. A. The Board hears objections from property owners regarding the assessed value of property they own, as determined by the City assessor.

B. The Board is quasi-judicial in nature, meaning that the Board members sit as a panel of judges.

C. Board members must decide cases based solely upon the information presented during the hearing and in conformance with 70.32 (1) Wis. Stats., or successor statute.

2.48.060 Confidentiality of financial information. Information about income and expenses that is provided to the assessor pursuant to s. 70.47(7)(af), Wis. Stats., or successor statute, shall be maintained as confidential by the assessor except as otherwise provided in this section. Such information may only be disclosed as follows: to persons using the information in the discharge of duties imposed by law or of the duties of their office or by order of a court. Such information is not subject to the right of inspection and copying under s. 19.35(1), Wis. Stats., or successor statute, unless a court determines that the information is inaccurate. (Ord. 7366, 2020; Ord. No. 6016, 2000.)

Chapter 2.50

UTILITY APPEALS BOARD

Sections:

2.50.010 Establishment.
2.50.020 Membership--Organization.
2.50.030 Authority.
2.50.040 Interpretation of provisions.
2.50.050 Board decisions.

2.50.010 Establishment. There is established a utility appeals board responsible for hearing appeals from persons who make and file applications with the utility alleging that a specified premises comes within the provisions of title 14, chapters 14.12, 14.16, 14.20; title 15, chapter 15.04; and title 19, chapter 19.01. (Ord. 5670, 1996; Ord. 4673 §3, 1986).

2.50.020 Membership--Organization. A. The board shall consist of 5 members, 2 of which shall serve a 3-year term, recommended by the advisory committee on appointments and confirmed by the city council. The remaining members shall consist of the director of community services, director of finance and a council member. The council member shall be appointed by the city council and serve a term coinciding with the council member's term of office.

B. All meetings, transactions and records of action of the board shall be open to the public; provided that, in consideration of a case before it, the board may go into closed session for the purpose of discussion, as permitted by law.

C. The board shall adopt rules and regulations for the transaction of business. Meetings shall be held at the call of the chairman and at such other times as the board may determine. The

utilities accountant shall act as secretary for the board. (Ord. 7202, 2016; Charter Ord. 6935, 2010; Ord. 4673 §3, 1986).

2.50.030 Authority. The board, in exercising the power and authority granted by this chapter, shall act on specific appeals and applications only, except in exercising its power of interpretation as specified in section 2.50.040. Such action shall not change or have the effect of changing any rule, regulation, provision or restriction of state statute, public service commission rates and rules, or titles 14, 15, and 19 of these ordinances, but shall affect only its application to specific cases before the board. In exercising its power of interpretation, the board may act upon application, upon written request from the city council, or upon its own motion. (Ord. 5670, 1996; Ord. 4673 §3, 1986).

2.50.040 Interpretation of provisions. The board shall interpret the words, terms, rules, regulations, provisions and restrictions of titles 14, 15 and 19 and shall make a determination as to the application of the provisions of said titles to the premises as specified in the appeal. Prior to making such determination, the board shall provide an opportunity to the claimant to be heard and shall consider any relevant evidence relating to the claim. (Ord. 5670, 1996; Ord. 4673 §3, 1986).

2.50.050 Board decisions. The determination of the board shall govern all utility service charges thereafter levied and imposed upon the premises, and may, in the discretion of the board, provide for reasonable and appropriate adjustment of prior utility service charges imposed. All determinations of the board shall be final. (Ord. 4673 §3, 1986).

Chapter 2.52

BOARD OF HEALTH

Sections:

2.52.010 Definitions.
2.52.020 Health department established.
2.52.030 Board of health.
2.52.040 Powers and duties.
2.52.050 Regulations.
2.52.060 Director.
2.52.070 Budget; Appropriation; Fund.

2.52.010 Definitions. In this chapter, the following words and terms shall have the following meanings, unless the context clearly requires otherwise:

A. "Board of health" means the board of health established under s. 2.52.030.
B. "City" means the city of Eau Claire.
C. "City council" means the city council of the city of Eau Claire.
D. "County" means Eau Claire county.
E. "County board" means the Eau Claire county board.
F. "DHSS" means the State of Wisconsin Department of Health and Social Services.
G. "Health department" means the Eau Claire city-county health department established under s. 2.52.020. (Ord. 5392 §1, 1994).

2.52.020 Health department established. A city-county health department is hereby established as required under s. 251.02(1), Wis. Stats., to have jurisdiction within the city and county. (Ord. 5392 §1, 1994).

2.52.030 Board of health. A. The health department shall be managed by a board of health. The board of health shall have complete and exclusive control over the management and operations of the health department. The board of health shall consist of 8 members. The members shall reflect the diversity of the community. At least 3 of the members who are not elected officials or employees

of the city or county shall have a demonstrated interest or competence in the field of public health or community health. The members shall be qualified and appointed as follows:

1. One member of the city council, appointed by the city council.

2. One member of the county board, appointed by the chairperson of the county board with the approval of the county board.

3. Two physicians practicing in the county. Such physicians shall be selected from a list provided by the Eau Claire County medical society, where practical and desirable. One physician shall be appointed by the chairperson of the county board with the approval of the board. The other physician shall be appointed by the city council.

4. One dentist practicing in the county. Such dentist shall be selected from a list provided by the Eau Claire County dental society, where practical and desirable. Such dentist shall be appointed by the chairperson of the county board with the approval of the board.

5. One registered nurse with experience in community health practice. Such nurse shall be jointly appointed by the city and the county.

6. Two members of ability and known to have a broad social viewpoint and a serious interest in the health protection of the community. One such member shall be appointed by the chairperson of the county board with the approval of the board. The other such member shall be appointed by the city council.

B. The term of office of the members shall be 5 years.*

C. Public notice shall be given of the annual vacancies occurring on the board of health.

D. Members of the board of health shall be residents of the city or county.

E. If any member of the board of health no longer meets the qualifications for appointment as set forth in s. 2.52.030, the position held by such member shall be vacant.

F. Any vacancy occurring on the board of health shall be filled in the same manner as the original appointment.

G. The board of health shall elect one member as president and one member as vice-president. An accurate record shall be kept of all board of health meetings. (Ord. 5392 §1, 1994).

---

* State law requires that the members of the board of health shall have staggered terms of office. s. 251.03(4), Wis. Stats.

2.52.040 Powers and duties. The board of health shall:

A. Govern the health department and assure the enforcement of state public health statutes and public health rules of the state.

B. Assure that the health department is a Level I, Level II or Level III local health department as specified in s. 251.05(1), Wis. Stats.

C. Report to the DHSS as required by rule.

D. Meet at least quarterly.

Accordingly, this ordinance shall not affect the term of those members of the board of health currently holding office. Each member of the board of health in office at the time of enactment of this ordinance shall continue to serve until expiration of the member's term or until a vacancy sooner occurs. Upon expiration of such term or in the event of a vacancy, a successor, bearing the same qualifications as the member, shall be appointed as provided herein.

If appointed following the expiration of a term, the successor shall have a term of 5 years. If appointed following a vacancy, the successor shall be appointed for the remainder of the unexpired term of office of the member vacating office.

E. Assess public health needs and advocate for the provision of reasonable and necessary public health services.

F. Develop policy and provide leadership that fosters local involvement and commitment, that emphasizes public health needs, and that advocates for equitable distribution of public health resources and complementary private activities commensurate with public health needs.

G. Assure that measures are taken to provide an environment in which individuals can be healthy.

H. Employ qualified public health professionals, such other staff as are necessary to carry out the mission of the health department, and a public health nurse to conduct general public health

nursing programs under the direction of the board of health and in cooperation with the DHSS. The board of health may employ environmental health specialists, known as sanitarians, to conduct environmental programs and other public health programs not specifically designated by statute as functions of the public health nurse.

I. Appoint the director of the health department.

J. Determine the compensation for the director and employees of the health department. (Ord. 5392 §1, 1994).

2.52.050 Regulations. The board of health may adopt regulations that it considers necessary to protect and improve public health. The regulations shall be no less stringent than, and shall not conflict with, state statutes and rules and regulations of DHSS. Such regulations shall be published as a class 1 notice under ch. 985, Wis. Stats., and, unless otherwise specifically provided, shall take effect immediately following publication. (Ord. 5392 §1, 1994).

2.52.060 Director. The director of the health department shall serve as the local health officer. The director shall be a full-time employee of the health department, as required by s. 251.06(2)(a), Wis. Stats. The director shall maintain the qualifications required under s. 251.06, Wis. Stats. (Ord. 5392 §1, 1994).

2.52.070 Budget; Appropriation; Fund. A. The board of health shall annually prepare a budget of its proposed expenditures for the ensuing fiscal year and determine the proportionate cost to the county and the city on the basis of equalized valuation. A certified copy of the proposed budget, which shall include a statement of the amount required from the city and the county, shall be delivered to the county administrative coordinator and to the city manager of the city. The proposed budget shall be reviewed by a joint budget review team of county staff members selected by the administrative coordinator and city staff members selected by the city manager.

B. The appropriation to be made by the county and the city shall be determined by the county board and the city council, respectively. No part of the cost apportioned to the county shall be levied against any property in the city.

C. A city-county health department fund shall be established and maintained in the office of the treasurer of the city, as determined by the board of health. The county and the city shall each make an annual payment into said fund, the share of the county and the city as determined and appropriated by the city and the county. (Ord. 5392 §1, 1994).

Chapter 2.54

DEPARTMENT OF COMMUNITY DEVELOPMENT

Sections:

2.54.010 Department created.
2.54.020 Appointment--Duties.

2.54.010 Department created. There is created a department of community development under the supervision of a director of community development. (Ord. 5004 §1, 1989; Ord. 4186 §2, 1981; Charter Ord. 3778 §9(part), 1977).

2.54.020 Appointment--Duties. The city manager shall appoint a director of community development who shall be in charge of the planning function for the city. The director shall be responsible for federal and state funding of projects for the development of the city. The director shall provide the staff support for the Eau Claire Housing Authority and shall perform such other duties as may be assigned from time to time by the city manager. (Ord. 5004 §1, 1989; Ord. 4186 §3, 1981; Charter Ord. 3778 §9(part), 1977).

Chapter 2.56

PLAN COMMISSION

Sections:

2.56.010 Commission created.
2.56.020 Composition.
2.56.025 Chairperson--Election.
2.56.030 Members--Appointments.
2.56.040 Filling of vacancies.
2.56.050 Compensation--Oath.
2.56.060 Powers and duties.
2.56.070 Organization.
2.56.080 Experts--Temporary staff.
2.56.090 Rules adoption.

2.56.010 Commission created. A city plan commission for the city of Eau Claire is created. (Prior code §1.21A).

2.56.020 Composition. The city plan commission shall consist of two members of the city council and seven citizens. Citizen members shall be persons of recognized experience and qualifications. (Charter Ord. 5370 §2, 1993; Charter Ord. 4708 §2, 1987; Prior code §1.21B 1).

2.56.025 Chairperson--Election. At the opening of the first meeting in May, the plan commission shall elect from its membership a chairperson and a vice-chairperson. (Charter Ord. 5370 §3, 1993; Charter Ord. 4708 §3, 1987).

2.56.030 Members--Appointments. A. The council members of the commission shall be elected by a two-thirds vote of the common council during each April for a term of office commencing on May 1 to coincide with the term of office on the city council, but not to exceed one year.

B. Three citizen members shall be recommended by the advisory committee on appointments and confirmed by the city council upon the creation of the commission to hold office for a period ending one, two and three years, respectively, from the succeeding first day of May, and thereafter annually during April one such member shall be appointed for a term of three years.

C. Four additional citizen members shall be recommended by the advisory committee on appointments and confirmed by the city council to hold office for a period ending one year from the succeeding first day of May, and thereafter annually during the month of April. Should a park board be created at any time, or a city engineer appointed, the president of such board or such engineer shall succeed to a place on the commission when the term of one of the citizen members, designated by the city council, expires. (Charter Ord. 6935, 2010; Charter Ord. 5370 §4, 1993; Prior code §1.21 B 2, 3, 4).

2.56.040 Filling of vacancies. Vacancies other than ex officio shall be filled by appointment for the residue of the unexpired term in the same manner as appointment for the full term. (Prior code §1.21 C).

2.56.050 Compensation--Oath. No compensation shall be paid for service on the commission, except that citizen members of the commission may be reimbursed for their actual and necessary expenses incurred in the performance of their duties, if the same is approved by the city council. Citizen members shall take the official oath required by Section 19.01 of the statutes, which shall be filed with the city clerk. (Ord. 4130, 1980; Prior code §1.21 D).

2.56.060 Powers and duties. The plan commission shall have the powers and duties prescribed in Section 62.23 of the statutes and all legislative enactments, amendatory thereof or

supplementary thereto, and such other powers and duties as shall be vested in them from time to time by law or the city council. (Prior code §1.21 E).

2.56.070 Organization. As soon as all members of the first commission have been appointed the city clerk shall give each member a written notice of the appointment, and thereon shall fix the time and place of the first meeting which shall be no less than five nor more than ten days thereafter. The commission shall elect a vice-chairman and a secretary, and shall keep a written record of its proceedings to include all actions taken, a copy of which shall be filed with the city clerk. The records of the commission shall be public records. Five members shall constitute a quorum, and all legislative actions shall require the affirmative approval of a majority of the members. In matters coming before the plan commission where the commission performs an advisory function, the vote of a majority of a quorum shall be sufficient to make a report or recommendation. (Ord. 4772, 1987; Prior code §2.21 F).

2.56.080 Experts--Temporary staff. The plan commission shall have power to employ experts and such staff as may be necessary, and to pay for their services and such other expenses as may be necessary and proper, within the limits of the budget established by the city council, or placed at its disposal through gift, and subject to any ordinance or resolution enacted by the city council. As far as possible the commission shall utilize the services of existing city officials and employees. (Prior code §1.21 G).

2.56.090 Rules adoption. The plan commission is authorized to adopt rules governing its own proceedings. (Prior code §1.21 H).

Chapter 2.60

TRANSIT COMMISSION

Sections:

2.60.010 Commission created.
2.60.020 Membership--Terms--Qualifications.
2.60.030 Powers and duties.
2.60.040 Meetings.

2.60.010 Commission created. Pursuant to the provisions of Wisconsin Statutes Section 66.1021 (1) a transit commission, to be known as the "Eau Claire transit commission", is created for the establishment, maintenance and operation of a comprehensive unified local transportation system, as defined by Wisconsin Statutes Section 66.1021 (3)(a), for the service of the citizens of Eau Claire. (Ord. 3402 §I, 1973; Prior code §1.27(1)).

2.60.020 Membership--Terms--Qualifications. The transit commission shall consist of nine members; six shall be recommended by the advisory committee on appointments, one shall be a university student recommended by UW-Eau Claire, one shall be a resident of the City of Altoona recommended by the City of Altoona, and one shall be a member of the city council, and all of whom shall be confirmed by the city council. The commissioners shall elect a chairperson, vice-chairperson and secretary. The term of office shall be three years, except for the city council member and the university student who shall serve one year terms. (Charter Ord. 7070, § I, 2013; Charter Ord. 6935, 2010; Charter Ord. 6043 §2, 2000; Charter Ord. 4813 §2, 1988; Ord. 3402 §I, 1973; Prior code §1.27 (2)).

2.60.030 Powers and duties. The transit commission's powers and duties shall be as follows:

1. Determine and adjust routes as needed and make recommendations to city council on major route changes with budget implications.

2. Recommend fare changes to city council.
3. Act as an advocate in the community for transit services.
4. Review and advise the city council on transit budget recommendations.
5. Monitor ridership, surveys, services, and budget, and engage in strategic transit planning.
6. Periodically review the list of service complaints received by the transit department.
7. Review the Transit Development Plan and recommend additions and/or revisions.
8. Advance recommendations regarding other modes of public transportation which include, but are not limited to, light rail, taxis, park and ride facilities and ride-sharing.
9. Review and make recommendations about parking issues that significantly impact transit services and routes.(Charter Ord. 7070, § 2, 2013; Ord. 3402 §I, 1973; Prior code §1.27(3)).

2.60.040 Meetings. The transit commission shall hold regular meetings as may be provided by its by-laws, and may hold special meetings on the call of the chairperson, by any three commissioners, or at the request of the city council. (Charter Ord. 6043 §2, 2000; Ord. 3402 §I, 1973; Prior code §1.27 (4)).

Chapter 2.64

CITY WATERWAYS AND PARKS COMMISSION

Sections:

2.64.010 Creation.
2.64.020 Purpose and intent.
2.64.030 Composition.
2.64.040 Procedure.
2.64.050 Duties and responsibilities.
2.64.060 Meetings.

2.64.010 Creation. A waterways and parks commission for the city of Eau Claire is hereby created. (Ord. 4700, 1987; Ord. 3388 §I, 1973; Prior code §1.23 A).

2.64.020 Purpose and intent. It is hereby declared a matter of public policy that the protection, enhancement, and promotion of the city's waterways and parks is a public necessity and is required in the interest of the health, prosperity, safety, and welfare of the community. The purpose of this chapter is to:

A. Promote the appreciation of the city's waterways and parks and improve the community's perception of these areas as a valuable aesthetic, environmental, recreational, and economic resource;

B. Stimulate and guide public and private development and revitalization along the waterways in a way that contributes to the aesthetic and environmental enhancement of these areas while improving the community's economic vitality;

C. Promote and plan for the development of the waterway corridors and city parks to their fullest recreational potential;

D. Protect and enhance the abundance and diversity of the natural resources within the waterway corridor and park areas of the city of Eau Claire. (Ord. 4700, 1987).

2.64.030 Composition. A. The waterways and parks commission shall consist of 11 members, 9 of which shall be recommended by the advisory committee on appointments and confirmed by the city council. The remaining two members shall be council members, each appointed by the city council to a term coinciding with his or her term of office.

B. The members of the commission shall elect to serve a 1-year term, a chairman, vice-chairman, secretary and other officers as may be necessary from among their membership at the first

meeting of the commission after all appointments have been made. Said officers shall thereafter be elected for a 1-year term each year at the first meeting after new appointments to the commission have been made.

C. The directors of community services and planning and development or their designees, shall serve as ex-officio, non-voting members of the commission. (Ord. 7202, 2016; Ord. 7193, §2, 2016; Charter Ord. 6935, 2010; Ord. 4700, 1987).

2.64.040 Procedure. A majority of the commission shall constitute a quorum. The commission shall adopt such by-laws as appropriate to further govern its proceedings. (Ord. 4700, 1987).

2.64.050 Duties and responsibilities. The commission shall have the following duties and responsibilities:

A. Promote community awareness of Eau Claire's waterways, parks and greenways;

B. Advise the plan commission and city council on appropriate zoning regulations for waterway-, parkland- and greenway-related development;

C. Initiate guidelines for waterway-, parkland- and greenway-related development;

D. Advise the plan commission and city council on waterway, parkland and greenway policies to be incorporated into the city comprehensive plan;

E. Review and make formal recommendations prior to the plan commission, city council or zoning board of appeals review of all development proposals for property abutting parkland, greenways, as defined in the comprehensive plan, and the Chippewa River, Eau Claire River, Half Moon Lake, or such other waterways or water corridors as may be designated by the city council. Such review shall be mandatory and shall include proposed public capital improvements that affect parks and waterways and greenways;

F. In its discretion, to initiate and coordinate fund raising and special events to support and publicize improvements for the waterways, waterway corridors, parks, greenways or related trail systems;

G. Advise the city council on priorities for public water investment and economic revitalization along the waterways;

H. Review and comment on matters pertaining to the development and policies of city parks and parks and recreation programs and review of matters relating to parks, waterways or green spaces which would be acted on by the city council, excluding consent agenda items; and

I. Advise the city council on public safety and security policies and procedures in all public park, greenway and waterway areas. (Ord. 5931, 1999; Ord. 4700, 1987).

2.64.060 Meetings. The commission shall hold regular meetings as may be provided by its by-laws, and may hold special meetings on the call of the chairman or at the request of the city council. (Ord. 4700, 1987).

Chapter 2.65

LANDMARKS

Sections:

2.65.010 Purpose and intent.
2.65.020 Definitions.
2.65.030 Landmarks commission composition and terms.
2.65.040 Powers and duties of the landmarks commission.
2.65.050 Procedures for designation of landmarks, landmark sites and historic districts.
2.65.060 Conformance with regulations.
2.65.070 Maintenance of landmarks, landmark sites and structures within historic districts.

2.65.080 Conditions dangerous to life, health or property.
2.65.090 Appeals of landmarks commission actions.
2.65.100 Transitional provision.
2.65.110 Penalty for violation.

2.65.010 Purpose and intent. It is hereby declared a matter of public policy that the protection, enhancement, perpetuation and use of improvements of special character or special historical interest or value is a public necessity and is required in the interest of health, prosperity, safety and welfare of the people. The purpose of this chapter is to:

A. Effect and accomplish the protection, enhancement, and perpetuation of landmarks and historic districts which represent or reflect elements of the city's cultural, social, economic, political and architectural history.

B. Safeguard the city's historic and cultural heritage, as embodied and reflected in such landmarks and historic districts.

C. Stabilize and improve property values.

D. Foster civic pride in the beauty and noble accomplishments of the past.

E. Protect and enhance the city's attractions to residents, tourists and visitors.

F. Serve as a support and stimulus to business and industry.

G. Strengthen the economy of the city.

H. Promote the use of landmarks and historic districts for the education, pleasure, and welfare of the people of the city. (Ord. 4293, 1982).

2.65.020 Definitions. In this section, unless the context clearly requires otherwise:

A. "Commission" means the Landmarks Commission created under this chapter.

B. "Exterior Alteration" means any modification of exterior dimensions of a structure including the attachment of appurtenances such as stairs, fire escapes, chimneys, carports and other similar construction or the modification of materials including, but not limited to roofing, siding, masonry, wood trim, windows or signs. Normal maintenance of existing exterior features or materials including cleaning, painting and replacement shall not be considered exterior alterations.

C. "Historic District" is an area that has a special character or special historic interest or value as part of the development, heritage or cultural characteristics of the city, state or nation and which has been designated as a district pursuant to the articles of this chapter. Each property within a historic district may be assigned one of the following classifications in the district plan to identify its architectural and historic significance in relation to the other properties within the district:

1. "Pivotal" properties are those which are historically or architecturally significant and which are eligible to qualify as landmarks under this chapter.

2. "Contributing" properties are those which are historically or architecturally significant through their relationship to other historically or architecturally significant properties in a particular area. These properties have maintained most of their historical and architectural characteristics and complement or add to the character of the district. A contributing property may also be a simpler architectural example of a structure which is individually eligible to qualify as landmarks under this chapter.

3. "Non-contributing" properties are those which have either lost most of their historical and architectural significance because of extensive exterior alteration which was not appropriate to the architecture of the property or are of a more recent architectural or historical period than the majority of properties in the district. A non-contributing property may still retain some original architectural detailing or characteristics. Such properties may be included within a historical district if the Commission finds that the alteration or razing of such a property could negatively affect adjacent properties or have an adverse effect on the district; or if such property is surrounded by pivotal or contributing properties.

D. "Improvement" means any building, structure, place, work of art or other object constituting a physical betterment of real property, or any part of such betterment.

E. "Improvement Parcel" is the unit of property which includes a physical betterment constituting an improvement and the land embracing the site thereof, and is treated as a single entity for the purpose of levying real estate taxes. Provided, however, that the term "improvement parcel"

shall also include any unimproved area of land which is treated as a single entity for such tax purposes.

F. "Landmark" means any improvement which has a special character or special historic interest or value as part of the development, heritage or cultural characteristics of the city, state or nation and which has been designated as a landmark pursuant to the provisions of this chapter.

G. "Landmark Site" means any parcel of land of historic significance due to a substantial value in tracing the history of aboriginal man, or upon which a historic event has occurred, and which has been designated as a landmark site under this section, or an improvement parcel, or part thereof, on which is situated a landmark and any abutting improvement parcel, or part thereof, used as and constituting part of the premises on which the landmark is situated. (Ord. 5456 §1, 1994; Ord. 4293, 1982).

2.65.030 Landmarks commission composition and terms. A Landmarks Commission is hereby created, consisting of 7 members including a registered or previously registered architect; a historian qualified in the field of historic preservation; a licensed real estate broker or salesperson; a City Council member and three citizen members. Each member shall have, to the highest extent practicable, a known interest in landmarks preservation. The Commissioners shall be recommended by the advisory committee on appointments and confirmed by the city council. the term for each member shall be three years. (Ord. 7193, §3, 2016; Charter Ord. 6935, 2010; Ord. 4293, 1982).

2.65.040 Powers and duties of the landmarks commission. A. Designation recommendations. The Commission shall have the power, subject to the provisions of Section 2.65.050 of this chapter, to designate landmarks, landmark sites and historic districts within the city limits. Such designation shall be made based on criteria specified in Section 2.65.050. Once designated by the Commission, such landmarks, landmark sites and historic districts shall be subject to all the provisions of this chapter.

B. Regulation of construction, reconstruction and exterior alteration to landmarks, landmark sites, and structures within historic districts.

1. Procedure. All applications for a building permit for exterior alterations, reconstruction or new construction to landmarks, landmark sites or structures within a historic district shall be transmitted to the Commission for issuance of a certificate of appropriateness prior to issuance of a building permit. The applicant shall submit a detailed description of the proposed construction, reconstruction or alteration, together with any architectural drawings, if those services have been utilized by the applicant, and a sufficient description of the construction or alteration and use to enable the Commission to determine what the final appearance of the structure will be.

Upon receiving an application for construction, reconstruction, or exterior alteration, the Commission shall schedule a review of the application by the Commission within 30 days. In making its determination on the application, the Commission shall consider or may give decisive weight to any or all of the criteria listed under Section 2.65.040 (B)(2) and any such policies as may be adopted by the City Council or Commission that would further clarify such criteria or the standards and guidelines contained in a district plan.

Following the hearing on the application, the Commission shall act within 30 days. The Commission may approve, deny or condition issuance of the certificate of appropriateness on making changes in the submitted plan. The Commission shall provide the applicant with the following:

a. If the certificate of appropriateness is granted or approved with conditions, a specific list of all actions required by the applicant in order to comply with the certificate of appropriateness, together with the criteria upon which such list is based, or

b. If the certificate of appropriateness is denied, the reasons for denial and the specific criteria upon which the denial is based.

All actions taken by the Landmarks Commission shall be recorded in the minutes of the Commission and shall state the reasons for the action taken. Notice of the granting, approval with conditions, or denial of a certificate of appropriateness shall be mailed to the owner of the subject property pursuant to Section 2.65.090 within five days after such action. A copy of the final approval plan shall be attached to the building permit. It shall be the responsibility of the building inspector to assure that actual development conforms to the plans approved by the Commission.

The Commission shall appoint a designee(s) to review and approve applications for certificates of appropriateness that will have no effect on the exterior architectural appearance of the building. If the designee(s) make a determination that the proposed application will have no effect on the exterior architectural appearance of the building, the designee(s) may approve the certificate of appropriateness without forwarding such application to the Landmark Commission for review. The designee(s) shall report any such action to the Landmarks Commission at the Commission's next regularly scheduled meeting. If the designee(s) determines that such application may have an effect on the exterior architectural appearance of the building, such application shall be forwarded to the Commission for review as provided above.

2. Criteria for review of construction, reconstruction, or exterior alteration to landmarks, landmark sites and structures in historic districts.

a. "The Secretary of the Interior's Standards for Rehabilitation" shall apply to construction, reconstruction and exterior alterations. These standards are as follows:

1) Every reasonable effort shall be made to provide a compatible use for a property which requires minimal alteration of the building, structure, or site and its environment, or to use a property for its intended purpose.

2) The distinguishing original qualities or character of a building, structure, or site and its environment shall not be destroyed. The removal or alteration of any historic material or distinctive architectural features should be avoided when possible.

3) All buildings, structures, and sites should be recognized as products of their own time. Alterations which have no historical basis and which seek to create an earlier appearance shall be discouraged.

4) Changes which may have taken place in the course of time are evidence of the history and development of a building, structure or site and its environment. These changes may have acquired significance in their own right, and this significance should be recognized and respected.

5) Distinctive stylistic features or examples of skilled craftsmanship which characterize a building, structure, or site, shall be treated with sensitivity.

6) Deteriorated architectural features shall be repaired rather than replaced, wherever possible. In the event replacement is necessary, the new material should match the material being replaced in composition, design, color, texture, and other visual qualities. Repair or replacement of missing architectural features should be based on accurate duplications of features, substantiated by historical physical, or pictorial evidence rather than on conjectural designs or the availability of different architectural elements from other buildings or structures.

7) The surface cleaning of structures should be undertaken with the gentlest means possible. Sandblasting and other cleaning methods that will damage the historic building materials shall not be undertaken.

8) Every reasonable effort should be made to protect and preserve archeological resources affected by, or adjacent to, any project.

9) Contemporary design for alterations and additions to existing properties shall not be discouraged when such alterations and additions do not destroy significant historical, architectural or cultural material, and such design is compatible with the size, scale, color, material and character of the property neighborhood or environment.

10) Whenever possible, new additions or alterations to structures shall be done in such a manner that if such additions or alterations were to be removed, in the future, the essential form and integrity of the structure would be unimpaired.

b. For structures located within an historic district, the standards and guidelines adopted in district plans pursuant to Section 2.65.050 (B) shall apply, in addition to the criteria listed above. The significance assigned a property in a district plan as pivotal, contributing or non-contributing shall be given decisive weight by the Commission when the Commission applies the district standards and guidelines to a proposed project. The Commission shall require greater conformance to such standards and guidelines for properties which are historically or architecturally significant and which contribute to or complement the district.

For properties identified as non-contributing in the district plan, the guidelines contained in such district plan shall be waived. The Commission shall review exterior alterations, reconstruction or additions to such non-contributing structures using the following criteria:

1) Any such work shall retain or be compatible with the original or existing door and window openings and dimensions and features such as porches and dormers which are visible from the street.

2) Additions shall not extend closer to a property line abutting a street, unless the setback of the addition is compatible with the setbacks of the existing buildings in the immediate area.

3) New siding is acceptable which imitates the width and pattern of the original or existing siding.

4) Second exit platforms and fire escapes shall not be placed on the front facade, whenever possible. Such structures placed on any facade which are visible from the street must be designed to complement the architectural integrity of the building.

5) Additions shall not exceed the height of the existing structure with the roof design of such addition consistent with the roof design of the roof of the existing structure.

c. For new construction within an historic district, the following criteria shall apply:

1) The mass, volume, and setback of proposed structures should appear to be compatible with existing buildings in the immediate area.

2) The facade of new or remodeled structures should maintain a compatible relationship with those of existing structures in terms of: window sill or header lines; proportion of window and door openings; horizontal or vertical emphasis of major building elements; and extend of architectural detail.

3) The building materials and colors used should complement and be compatible with other buildings in the immediate area.

4) The sizing, design and placement of signs should fit the building and the adjacent structures.

5) All landscaping and parking provisions should complement and be compatible with improvements in the immediate area.

C. Regulation of demolition of landmarks and structures within historic districts.

1. Procedure. No person in charge of a landmark, or improvement in an historic district, shall be granted a permit to demolish such property without issuance of a certificate of appropriateness by the Commission. At such time as a property owner applies to the City for a permit to demolish such property, such application shall be filed with the Commission.

In determining whether to issue a certificate of appropriateness for any demolition, the Commission shall consider or may give decisive weight to any or all of the criteria listed under Section 2.65.040(C)(2).

Upon study of the application, the Commission may refuse to grant a certificate of appropriateness for a period of up to 18 months from the time of such application, during which time the Commission and the applicant shall undertake serious and continuing discussions for the purpose of finding a method to save such property.

At the end of this 18 month period, if no mutually agreeable method of saving the subject property bearing a reasonable prospect of eventual success is underway, or if no funds from any governmental unit or nonprofit organization to preserve the subject property have been received or granted, the Commission shall issue a certificate of appropriateness.

2. Criteria for reviewing demolitions.

a. Whether the building or structure is of such architectural or historic significance that its demolition would be detrimental to the public interest and contrary to the general welfare of the people of the City;

b. Whether the building or structure, although not itself a landmark building, contributes to the distinctive architectural or historical character of the historic district as a whole and therefore should be preserved for the benefit of the people of the City;

c. Whether the building or structure is of such old and unusual or uncommon design, texture or material that it could not be reproduced or be reproduced only with great difficulty or expense;

d. Whether retention of the building or structure would promote the general welfare of the people of the City by encouraging study of American history, architecture and design or by developing an understanding of American culture and heritage;

e. Whether the building or structure is in such a deteriorated condition that it is not structurally or economically feasible to preserve or restore it, provided that any hardship or difficulty claimed by the owner which is self-created or which is the result of any failure to maintain the property in good repair cannot qualify as a basis for the issuance of a certificate of appropriateness;

f. Whether any new structure proposed to be constructed or change in use proposed to be made is compatible with the buildings and environment of the district in which the subject property is located.

D. Recognition of landmark, landmark sites or historic districts. At such time as a landmark, landmark site or historic district has been properly designated in accordance with Section 2.65.050, the Commission may cause to be prepared and erected on such property at City expense, a suitable plaque declaring that such property is a landmark, landmark site or historic district. Such plaque shall be so placed as to be easily visible to passing pedestrians and shall indicate the dates of construction and other information deemed proper by the Commission.

E. Rescission of landmark designation.

1. Any person or group listed as the owner of record of a landmark or landmark site who can demonstrate to the Commission that by virtue of such designation he or she is unable to find a buyer willing to preserve such landmark or landmark site, even though such person has made reasonable attempts in good faith to find and attract such a buyer, may petition the Commission for a rescission of its designation. Following the filing of such petition with the Commission, the owner and the Commission shall work together in good faith to locate a buyer for the subject property who is willing to abide by its designation.

If, at the end of a period not exceeding 6 months from the date of such petition, no such buyer can be found, and if the owner still desires to obtain such rescission, the Commission shall rescind the designation of the subject property.

2. If for any reason a landmark property loses the character that originally caused its designation, the landmark status of the property can be rescinded by the Commission. Likewise, if any portion of an historic district or any entire historic district loses the character that caused its designation, landmark status of that part of the district or of the entire district can be rescinded by the Commission.

F. Other duties. In addition to those duties already specified in this section, the Commission shall:

1. Cooperate with the Wisconsin State Historic Preservation Officer and the State Historic Preservation Review Board in attempting to include on the National Register of Historic Places such properties hereunder designated as landmarks or landmark sites, or historic districts.

2. Work for the continuing education of the citizens about the historic heritage of this City and the landmarks and landmark sites designated under this chapter.

3. As it deems advisable, solicit and receive funds for the purpose of landmarks preservation in the City. Funds for such purpose shall be placed in a special City account. (Ord. 5456 §2, 1994; Ord. 4293, 1982).

2.65.050 Procedure for designation of landmarks, landmark sites and historic districts.

A. Designation of landmark or landmark site. The Commission may, after notice and public hearing, designate landmarks or landmark sites, or both, subject to the provisions of this subsection. At least 10 days prior to the hearing on these actions, the Commission shall notify the owners of record of the subject property and property in whole or in part situated within 200 feet of the boundaries of the subject property of the proposed action. The owners of record of the subject property shall be provided the opportunity to confer with the Commission prior to final action by the Commission on the proposed action.

The Commission shall also notify the City Department of Community Services, Department of Community Development, Engineering Department, Plan Commission and City Council. Each such department or board shall respond to the Commission within 30 days of notification with its comments on the proposed action.

Following proper notification, the Commission shall conduct a public hearing. In addition to hearing from notified persons, the Commission may hear expert witnesses and shall have the power to subpoena such witnesses and records as it deems necessary.

Within 30 days of the close of the public hearing, the Commission shall approve or reject the proposed designation. In making its designation, the Commission shall find that the subject property meets at least one of the following criteria:

1. Exemplifies or reflects the broad cultural, political, economic or social history of the nation, state or community; or

2. Is identified with historic personages or with important events in national, state or local history; or

3. Embodies the distinguishing characteristics of an architectural type, inherently valuable for the study of a particular period, style, method of construction or of indigenous materials or craftsmanship; or

4. Represents the notable work of a master builder, designer or architect whose individual genius influenced a particular age.

Following the action of the Commission, the City Clerk shall cause the designation to be recorded, at City expense, in the County Register of Deeds office.

B. Creation of historic districts. For preservation purposes, the Commission may recommend geographically defined areas within the City of Eau Claire to be designated as historic districts and shall, with the assistance of the Department of Community Development, prepare a historic preservation plan for each area. An historic district may be recommended for any geographic area of particular historic, architectural, or cultural significance to the City of Eau Claire which meets at least one of the following criteria:

1. Exemplifies or reflects the broad cultural, political, economic or social history of the nation, state or community; or

2. Is identified with historic personages or with important events in national, state or local history; or

3. Embodies the distinguishing characteristics of particular architectural types inherently valuable for the study of a period or periods styles, methods of construction, indigenous materials or craftsmanship; or

4. Is representative of the notable works of master builders, designers or architects who influenced their age.

Each historic preservation plan prepared for or by the Landmarks Commission shall include a cultural and architectural analysis supporting the historic significance of the area, specific standards and guidelines for development within the district, a statement of preservation objectives, and a map of the proposed district boundaries.

Upon preparation of the historic preservation plan for the proposed district, the Commission shall hold a public hearing. Notice of the time, place and purpose of the public hearing shall be sent by the City Clerk to the owners of record of property in the proposed district and situated in whole or in part within 200 feet of the boundaries of the proposed historic district. Said notice is to be sent at least 10 days, but not more than 30 days, prior to the date of the public hearing. Within 30 days following the public hearing, the Commission shall submit its recommendation and report to the City Council whether to designate, reject or withhold action on the proposed district.

Upon receipt of the Commission's recommendation and report, the City Council shall hold a public hearing concerning the proposed district. The City Council shall designate or reject the proposed district, or may consider amendments, changes, additions, or departures deemed advisable to the proposed district. If the Council makes such changes, it shall refer the proposed district back to the Landmarks Commission for rehearing and notice shall again be given as provided above. Council designation of a proposed district or adding of property to an existing district shall require a two-thirds favorable vote of the entire membership of the City Council.

Upon designation of a historic district, the City Clerk shall cause a document of such fact to be recorded, at City expense, in the County Register of Deeds Office, to be incorporated within the record title of each property which is included within the historic district.

C. Notice. Pursuant to the designation of property as a landmark or landmark site or its recommendation for inclusion in a historic district, the owner of record of the property shall be given a copy of this chapter and information containing a summary of the duties and responsibilities of a property owner under this chapter. (Ord. 7202, 2016; Ord. 5456 §3, 1994; Ord. 5218, §§1,2,3, 1992; Ord. 4293, 1982).

2.65.060 Conformance with regulations. A. Every person in charge of any landmark, landmark site or improvement in a historic district shall maintain same or cause it to be maintained in a condition consistent with the provisions of this chapter.

B. The City Manager is authorized to appoint staff to enforce this chapter. The duties of the inspection officer shall include periodic inspection at intervals provided by the City Manager of designated landmarks, landmark sites and historic districts. These inspections may include physical entry upon the property and improvements with the permission of the owner, to insure that interior alterations or maintenance will not jeopardize the exterior appearance or structural stability of the improvement. If an owner refuses permission for the enforcement officer to enter for purposes of inspection, the inspection officer may obtain a warrant of entry pursuant to Wisconsin Statutes Section 66.122 and take any other reasonable measures to further enforcement of this chapter. (Ord. 4293, 1982).

2.65.070 Maintenance of landmarks, landmark sites and structures within historic districts. Every person in charge of an improvement on a landmark site or in a historic district shall keep in good repair all of the exterior portions of such improvements and all interior portions thereof which, if not so maintained, may cause or tend to cause the exterior portions of such improvement to fall into a state of disrepair. this provision shall be in addition to all other provisions of law requiring such improvements to be kept in good repair.

Insofar as they are applicable to a landmark, landmark site or improvement in a historic district, any provision of the Plumbing Code; the Housing Maintenance and Occupancy Code; Building Code; Heating, Ventilating and Air Conditioning Code; and Sign Code regulations of the Code of Ordinances of the City of Eau Claire may be varied or waived, on application, by the appropriate board having such jurisdiction over such chapter or, in the absence of such board, by the building inspector, provided such variance or waiver does not endanger public health or safety. (Ord. 4293, 1982).

2.65.080 Conditions dangerous to life, health or property. Nothing contained in this chapter shall prohibit the making of necessary construction, reconstruction, alteration or demolition of any improvement on a landmark site or in a historic district pursuant to order of any governmental agency or pursuant to any court judgment, for the purpose of remedying emergency conditions determined to be dangerous to life, health or property. In such cases, no approval from the Commission shall be required. (Ord. 4293, 1982).

2.65.090 Appeals of landmarks commission actions. The Landmarks Commission shall notify by certified mail the owner(s) of record of any subject property of an action of the Commission relating to that property. The notice shall include notification of the 30 day appeal period, a listing and clarification of the specific appeal criteria, and a description of the appeal process and hearing. The owner(s) of record of the property may appeal an action of the Landmarks Commission relating to the designation of a landmark, landmark site, or historic district, the regulation of construction, reconstruction or exterior alteration, regulation of demolition, or the issuance of a certificate of appropriateness. An appeal may be initiated by filing a petition to appeal, specifying the grounds for such an appeal, with the City Clerk within 30 days of the date on which the final decision of the Commission is made. The City Clerk shall file the petition to appeal with the City Council, and a public hearing with the City Council shall be scheduled. After a public hearing, the City Council may, by a favorable vote of a majority of the Council, reverse or modify the decision of the Commission. In modifying or reversing a decision of the Commission, the City Council shall make one of the following findings:

A. That, owing to special conditions, the decision of the Commission would cause serious hardship to the property owner or preclude reasonable use of the property. Self-created hardship or expectation of increased economic return shall not be the basis for modifying or reversing a decision of the Commission; or

B. That, in an action of the Landmarks Commission relating to the regulation of construction, reconstruction or exterior alteration, regulation of demolition, or the issuance of a certificate of appropriateness, the property owner's proposed external alterations, reconstruction or new

construction materially or substantially complies with the standards for rehabilitation set forth in s. 2.65.040 B.2.a. and b.; or

C. That, in an action of the Landmarks Commission relating to the designation of a landmark, landmark site or historic district, the property does not meet the criteria set forth in s. 2.65.050 A. (Ord. 5456, §4, 1994; Ord. 4293, 1982).

2.65.100 Transitional provision. A. All actions taken or designations made by the Landmarks Commission prior to the effective date of this ordinance, are determined to be legal, valid and binding. Any landmark or landmark site designation which has been initiated but not completed prior to the effective date of this ordinance shall continue to be considered and acted upon in accordance with the provisions of prior chapter 2.65, insofar as the same is applicable, and the provisions of said chapter shall survive this amendment for such purpose. All other actions taken or commenced and all designations initiated after the effective date of this ordinance shall be in accordance with the provisions of this ordinance. All designated landmarks or landmark sites shall comply with the provisions of this ordinance.

B. The adoption of this ordinance shall not result in the automatic designation as a landmark or landmark site or inclusion in a historic district of any property not so designated or included on the effective date of this ordinance (November 28, 1994). No such property shall be designated as a landmark or landmark site or included in a historic district without compliance with the standards and procedures as provided in this chapter. (Ord. 5456, §5, 1994; Ord. 4293, 1982).

2.65.110 Penalty for violation. Any person violating any provision of this chapter shall be subject to a forfeiture of not more than 200 dollars for each separate violation. Each and every day during which a violation continues shall be deemed to be a separate offense. (Ord. 4293, 1982).

Chapter 2.66

BICYCLE/PEDESTRIAN ADVISORY COMMITTEE

Sections:

2.66.010 Creation.
2.66.020 Purpose and Intent.
2.66.030 Composition.
2.66.040 Procedure.
2.66.050 Duties and Responsibilities.
2.66.060 Meetings.

2.66.010 Creation. A bicycle/pedestrian advisory committee for the city of Eau Claire is hereby created. (Ord. 7215, 2017; Ord. 6692, 2006)

2.66.020 Purpose and intent. It is hereby declared a matter of public policy that the protection, improvement, and enhancement of the city transportation system to ensure safe and efficient movement of people and goods, and provide a variety of mode choices, while enhancing neighborhood livability and resident quality of life, is a public necessity and is required in the interest of the health, prosperity, safety, and welfare of the community. The purpose of this chapter is to provide advice to the city council on bicycle and pedestrian related issues to help achieve the objectives of the city council's Strategic Plan, the Comprehensive Plan or the city manager's work plan.

A. Provide substantive advice and guidance to the city council on bicycle and pedestrian related issues;

B. Provide a balanced and efficient transportation network that offers viable alternatives to driving and maximizes the use of existing investment;

C. Improve pedestrian connections to create a continuous and seamless pedestrian system;

D. Enhance the pedestrian environment to create a more walkable community;

E. Continue to build a connected bicycle route and trail network that is viable, convenient,

safe, and secure; and

F. Encourage both utilitarian and recreational bicycling. (Ord. 7215, 2017; Ord. 6692, 2006).

2.66.030 Composition. A. The bicycle/pedestrian advisory committee shall consist of nine (9) members, which shall be recommended by the advisory committee on appointments and confirmed by the city council.

B. To the extent feasible, both transportation and recreational interests shall be represented, including, but not limited to bicycling organizations, organizations concerned with education and safety, business organizations, private citizens concerned with non-motorized transportation such as commuting, persons with disabilities, the aging community, recreational enthusiasts, and students.

C. The members of the committee shall elect to serve a one (1) year term a chair, vice-chair, secretary, and other officers as may be necessary from among the membership at the first meeting of the committee, after all appointments have been made. Said officers shall thereafter be elected for a one (1) year term, each year, at the first meeting after new appointments to the committee have been made.

D. The directors of community services, engineering, and community development, or their designees, shall serve as ex-officio, non-voting members and support staff to the committee. (Ord. 7215, 2017)

2.66.040 Procedure. A majority of the committee shall constitute a quorum. The committee shall adopt such by-laws as appropriate to further govern its proceedings. (Ord. 7215, 2017)

2.66.050 Duties and responsibilities. The committee shall be accountable to the city council. The committee shall provide advice to the city council that reflects community values on bicycle and pedestrian practices relative to the city. Annually, a designated staff liaison shall develop a draft work plan for the committee, which shall be based on the city council's Strategic Plan, the Comprehensive Plan or the city manager's work plan. The staff liaison may work with the committee until a mutually agreeable work plan is complete. The work plan may include new ideas or projects not specifically enumerated in the city council's Strategic Plan, the Comprehensive Plan or the city manager's work plan. Staff shall evaluate new ideas or projects for their efficacy and the expenditure of city resources, including staff time. Annually, the staff liaison shall present the committee's work plan to the city council at a regularly scheduled city council meeting for approval. Progress on the work plan may be reviewed mid-year with the city council or the city manager.
(Ord. 7215, 2017)

2.66.060 Meetings. The committee shall hold regular meetings as may be provided by its by-laws, and may hold special meetings at the call of the chair or at the request of the city council. (Ord. 7215, 2017; Ord. 6692, 2006).

Chapter 2.67

HOUSING OPPORTUNITIES COMMISSION

Sections:

2.67.010 Creation.
2.67.020 Definition.
2.67.030 Purpose and intent.
2.67.040 Composition.
2.67.050 Procedure.
2.67.060 Duties and responsibilities.
2.67.060 Meetings.

2.67.010 Creation. A Housing Opportunities Commission for the City of Eau Claire is

hereby created.

2.67.020 Definitions. As used in this chapter:

A. "Commission" means the Housing Opportunities Commission created under this chapter.

B. “Affordable housing” refers to housing units, and their related expenses, that cost no more than thirty percent of the average median gross annual income of a resident of Eau Claire to rent or finance utilizing prevailing home mortgage lending practices.

C. “Lived Experience” refers to the knowledge gained by those individuals who self-identify as currently experiencing, or having previously experienced, the challenge to find affordable housing.

2.67.030 Purpose and intent. It is hereby declared a matter of public policy that all citizens of Eau Claire deserve fair and equitable access to safe, stable, affordable housing. It is a public necessity and in the interest of the health, prosperity, safety, and welfare of the community to ensure that all Eau Claire residents have the ability to rent or own a home. The purpose of the Commission is to advise city council and further city housing policy as follows:

A. Recommend and review ordinances and other policies of general application that best ensure the availability of affordable housing in the city of Eau Claire.

B. Facilitate access to programs and funding for groups, including but not limited to, developers, builders and residents that contribute to Eau Claire’s affordable housing, and especially to reduce costs for those who face the greatest need.

C. Promote public-private partnerships that stimulates the development and revitalization of local housing units, expands the diversity of housing types, and improves housing affordability.

D. Review civic strategies that increase home ownership opportunities in the city of Eau Claire.

E. Regularly, but no less than annually, convene a regional meeting of industry and community stakeholders to share the Commission’s progress and direction on strategies for affordable housing and to receive feedback that may be incorporated into their work and recommendations to the City Council, staff and wider community.

2.67.040 Composition. A. The Housing Opportunities Commission shall consist of 11 members, 10 of which shall be recommended by the advisory committee on appointments and confirmed by city council upon creation of the Commission and 1 member shall be a city council member appointed by the city council at its organizational meeting.

B. The Commission shall include city of Eau Claire residents with backgrounds as local developers, realtors, property managers, public health, social service providers or other applicable lived experience and moreover at least one member with student housing lived experience. The city especially seeks members with an interest in providing local affordable housing through their expertise in the areas of real estate and development, social services, finance, economic development, lived experience, design and architecture, urban and regional planning, property management and community service leaders.

C. The members of the Commission shall serve a three-year-term; however, initial appointments to hold office for staggered terms of one, two and three years, respectively, as indicated for each member in the city council appointment resolution. The council member shall be appointed annually during the April city council organizational meeting.

D. At the first regularly scheduled meeting following the city council organizational meeting shall elect a chair and vice-chair to a one-year-term.

2.67.050 Procedure. A simple majority of the Commission shall constitute a quorum. The Commission shall adopt such by-laws as appropriate to further govern its proceedings.

2.67.060 Duties and responsibilities. The Commission shall have the following duties and responsibilities:

A. Support goals of the City Council Strategic Plan, the Comprehensive Plan,

and the city manager's work plan related to affordable housing.

B. Review affordable housing policies and provide recommendations and comments to the Plan Commission and City Council.

C. Recommend any affordable housing program eligibility criteria to City Council.

D. Initiate and recommend guidelines for development of Eau Claire affordable housing policy, including expanded home ownership and transitional housing opportunities in the city.

E. Annually propose to city council for its review and adoption affordable housing goals and Commission work plan based upon documented community need consistent with the Comprehensive Plan, Strategic Plan, and Regional Housing Task Force recommendations.

F. Provide advocacy for establishing and maintaining a diversity of housing types and opportunities in the city.

G. Promote a greater community understanding and acceptance of affordable housing through public education and public events.

H. Review and advise the city council on affordable housing priorities in the capital improvement plan for the city.

I. Explore strategies to minimize the cost of utilities, parking and transportation as factors impacting the affordability of housing.

2.67.070 Meetings. The Commission shall hold regular meetings on a monthly basis as may be further provided by its by-laws, and may hold special meetings on the call of the chairperson or at the request of the city council. (Ord. 7360, 2020)

Chapter 2.68

OFFICERS' BONDS

Sections:

2.68.010 Treasurer relieved of bond.
2.68.020 Obligation assumed by city.
2.68.030 Comptroller.
2.68.040 Chief of police.

2.68.010 Treasurer relieved of bond. The city elects not to give the bond on the municipal treasurer provided for by Section 70.67(1) of the statutes. (Prior code §1.20(1)).

2.68.020 Obligation assumed by city. Pursuant to Section 70.67(2) of the Wisconsin Statutes, the city shall be obligated to pay, in case the treasurer thereof fails to do so, all state and county taxes required by law to be paid by such treasurer to the county treasurer. (Prior code §1.20(2) (part)).

2.68.030 Comptroller. The comptroller shall be covered with a fidelity bond of ten thousand dollars. The city shall pay the cost of such bond. (Ord. 4942, 1989; Prior code §1.15 V).

2.68.040 Chief of police. The chief of police shall be covered with a fidelity bond of ten thousand dollars. The city shall pay the cost of such bond. (Ord. 4942, 1989).

Chapter 2.70

DEPARTMENT OF HUMAN RESOURCES

Sections:

2.70.010 Department created.

2.70.020 Appointment--Duties.

2.70.010 Department created. There is created a department of human resources under the supervision of a director of human resources. (Charter Ord. 3778 §10(part), 1977).

2.70.020 Appointment--Duties. The city manager shall appoint a director of human resources who shall be responsible for matters involving the personnel of the city, including the hiring, firing, compensation, promotion and demotion of employees. The director shall administer the affirmative action programs of the city and all other programs involving city personnel. The director shall be responsible for city employee labor relations and negotiations and shall perform such other duties as may be assigned from time to time by the city manager. (Charter Ord. 3778 §10(part), 1977).

Chapter 2.72

EMPLOYEES' REGULATIONS

Sections:

2.72.010 City of Eau Claire Pay Plan--Adopted.
2.72.020 City of Eau Claire Employee Benefits and Leaves Plan--Adopted.
2.72.030 Amendments.
2.72.130 Receipt of gifts and gratuities prohibited.

2.72.010. City of Eau Claire Pay Plan - Adopted. A document containing the City of Eau Claire's Pay Plan and Pay Practices for all City employees shall be on file in the City Clerk's office, the Plan to be signed by the Council President and attested by the City Manager. The City Manager shall administer, interpret, and enforce the Plan and further is authorized to make temporary or minor corrections or clarifications as needed to administer the Employee Pay Plan and Pay Practices for the City of Eau Claire. The City Manager, or his or her designee, shall recommend substantive changes to the City Council and facilitate periodic policy review of the Plan by Council. The Plan shall be open and available for public inspection during regular business hours of City Hall and through other appropriate means to provide broad public access. (Ord. 7491, 2022; Ord. 7464, 2022; Ord. 7460, 2022; Ord. 7456, 2021; Ord. 7400, 2020; Ord. 7393, 2020; Ord. 7351, 2019; Ord. 7344, 2019; Ord. 7302, 2018; Ord. 7279, 2018; Ord. 7278, 2018 Ord. 7277, 2018; Ord. 7267, 2018; Ord. 7266, 2018; Ord. 7254, 2017; Ord. 7209, 2016; Ord. 7186, 2016; Ord. 7168 §§1, 2 2015; Ord. 7163, 2015; Ord. 7151, 2015; Ord. 7146, 2015; Ord. 7140; 2015; Ord. 7128, 2015; Ord. 7124, 2015; Ord. 7112, 2014; Ord. 7111, 2014; Ord. 7095, 2014; Ord. 7078, 2013; Ord. 7073, 2013; Ord. 7065, 2013; Ord. 7054, 2013; Ord. 7045, 2013; Ord. 7040, 2012; Ord. 7024, 2012; Ord. 6995, 2011; Ord. 6981, 2011; Ord. 6971, 2011; Ord. 6952, 2011; Ord. 6944, 2010; Ord. 6905, 2009; Ord. 6895, 2009; Ord. 6807, 2008; Prior code §1.05 I).

2.72.020 City of Eau Claire Employee Benefits and Leaves Plan - Adopted. The City of Eau Claire's Employee Benefits and Leaves Plan for all City employees is adopted by reference and shall be on file in the City Clerk's office, the Plan to be signed by the Council President and attested by the City Manager. The City Manager shall administer, interpret, and enforce the Plan and further is authorized to make temporary or minor administrative corrections or clarifications as needed to administer the Employee Benefits and Leaves Plan for the City of Eau Claire. The City Manager, or his or her designee, shall recommend substantive changes to the City Council and facilitate periodic policy review of the Plan. The Plan shall be open and available for public inspection during regular business hours of City Hall and through other appropriate means to provide broad public access. (Ord. 7492, 2022; Ord. 7345, 2019; Ord. 7255, 2017; Ord. 7210, 2016; Ord. 7187, 2016; Ord. 7168 §3 2015; Ord. 7164, 2015; Ord. 7147, 2015; Ord. 7141, 2015; Ord. 7074, 2013; Ord. 7055 §1, 2013; Prior code §1.05 II).

2.72.030 Amendments. Amendments to said code shall be by ordinance. (Ord. 7055 §4, 2013; Prior code §1.05 V).

2.72.130 Receipt of gifts and gratuities prohibited. A. It is unlawful for any public employee or public official to receive or offer to receive, either directly or indirectly, any gift, gratuity or anything of value which he is not authorized to receive from any person, if such person:

1. Has or is seeking to obtain contractual or other business or financial relationships with such public employee's employer or the governmental body of the public official; or
2. Conducts operations or activities which are regulated by such public employee's employer or the governmental body of a public official; or
3. Has interests which may be substantially affected by such public employee's employer or the governmental body of the public official.

B. The receipt of any gift, gratuity, or anything of value as denoted above is contrary to the public policy of the city. (Ord. 3423, 1974; Prior code §1.30).

Chapter 2.76

EMPLOYEES' RETIREMENT SYSTEM

Sections:

2.76.010 State fund participation.

2.76.010 State fund participation. A. Pursuant to Wis. Stat. § 40.21, the city elects to include eligible city personnel under the provisions of the Wisconsin Retirement System in accordance with the terms thereof and all provisions and amendments thereto.

B. The effective date of participation shall be January 1, 1944.(Ord. 7134, 2015; Prior code §1.07).

Chapter 2.80

MUNICIPAL BAND

Sections:

2.80.010 Created.

2.80.010 Created. A municipal band is established and organized for musical purposes and is designated "Eau Claire Municipal Band" and shall be under the general direction of the director of community services. (Ord. 7202, 2016; Ord. 3398 §II, 1973; Prior code §23.10).

Chapter 2.84

CEMETERY REGULATIONS

Sections:

2.84.010 Purpose.
2.84.015 Definitions.
2.84.020 Rules pamphlets adopted.
2.84.030 Policy statement.
2.84.040 Purchase of lots.
2.84.050 Ownership rights of interment.

2.84.060 Cemetery maintenance and care.
2.84.070 Privileges and restrictions.
2.84.080 Rules for visitors.
2.84.090 Interments.
2.84.100 Disinterments.
2.84.110 Monuments and markers.
2.84.120 Monumentation structures.
2.84.130 Trees, shrubs and flowers.
2.84.140 Baby section.
2.84.160 Fees and charges.
2.84.165 Special regulations pertaining to columbaria.
2.84.200 Section created for veterans.
2.84.210 Penalty.

2.84.010 Purpose. It appearing that from compilations submitted by the director of finance and comptroller and by the director of community services that for several years last past the income from sales of lots and other cemetery charges have fallen short of covering the greatly increased costs of maintaining and operating the two city-owned cemeteries. Therefore, it is necessary in accordance with the theory of perpetual care to readjust schedules of fees and charges and to adopt new rules and regulations for cemetery operations. (Ord. 7202, 2016; Ord. 3123 §I(part), 1970; Prior code §13.25(a)).

2.84.015 Definitions. In this chapter, unless the context clearly indicates otherwise, the following words and terms mean as follows:

A. "Cemetery manager" means the director of community services, or designee of the director of community services, who is responsible for the management and care of the cemeteries owned by the city. (Ord. 7202, 2016; Ord. 5558 §1, 1995.)

2.84.020 Rules pamphlets adopted. Rules pamphlets entitled "Rules and Regulations and Fees and Charges" pertaining to Lakeview Cemetery and Forest Hill Cemetery, containing the following:

I. Rules and Regulations
- A. Purchase of Lots
- B. Ownership Rights of Interment
- C. Care of Lots
- D. Privileges and Restrictions
- E. Rules for Visitors
- F. Interments
- G. Disinterments
- H. Monuments and Markers
- I. Vaults and Mausoleums
- J. Trees, Shrubs and Flowers
- K. Miscellaneous

II. Fees and Charges
- A. Grave Lots
- B. Grave Openings and Closings
- C. Disinterments
- D. Laying Monument Foundation
- E. Fee for Setting Markers
- F. Chapel Heating and Storage Fees
- G. Columbaria

are adopted by reference as fully as if herein set out verbatim. Copies thereof shall be on file with the city clerk and the director of community services, and open to public inspection during normal business hours. (Ord. 7202, 2016; Ord. 6258 §1, 2002; Ord. 3123 §I(part), 1970; Prior code §13.25(b)).

2.84.030 Policy statement. Lake View Cemetery and Forest Hill Cemetery are owned and maintained by the city for the benefit of all citizens. Definite rules and regulations must be set up by the city council to insure proper maintenance and beauty and to prevent abuse and destruction. The following rules and regulations are set forth to govern Lake View Cemetery and Forest Hill Cemetery. The city reserves the right to amend or change any of these rules or regulations to conform with newly developed cemetery practices. However, before such charge is made a public hearing shall be held thereon before the city council and a notice thereof shall be published in the Eau Claire Leader or Telegram at least seven days prior to such hearing. (Ord. 3123 §I(part), 1970; Prior code §13.25 Rules (part)).

2.84.040 Purchase of lots. Persons or their agents desiring to purchase a lot in the cemetery are referred to the cemetery manager. The cemetery manager will have available suitable plats showing size and price of lots, and such other information as may be required, and will render assistance to those desiring to make lot purchases. Upon having made a lot selection, the cemetery manager will issue a lot order to the prospective purchaser. (Ord. 5558 §2, 1995; Ord. 3123 §I(part), 1970; Prior code §13.25 Rule I A).

2.84.050 Ownership rights of interment. A. The lot owner or his authorized agent shall have the right to use a lot or portion of a lot for burial purposes only in accordance with the terms of the cemetery rules and regulations.

Upon full payment of the purchase price of a lot, a deed will be issued and recorded in the records of the city as evidence of ownership of the lot. Lots, or fractions of lots, for which lot deeds have been issued by the city, will not thereafter be divided except by consent of the city. All lots are exempt from taxation and cannot be seized for debt (except those owed to the cemetery) nor can they be mortgaged.

All repossessed vacant grave spaces shall be subject to the same fees and charges.

The lot owner shall have acquired the lot for interment of himself and members of his family. However, the lot owner may grant written permission (which must be notarized and placed on file with the cemetery manager) for the burial of other persons. No corpse shall be interred in a lot except the corpse of one having an interest therein, or a relative, or the husband, or wife of such person, or his or her relative, except by the consent of all persons having an interest in the lot.

B. Unless otherwise directed in writing and filed with the cemetery manager, the lot owner, his devisees, or his heirs, the cemetery will permit the interment of members of his family at the request of any interested person upon proof of eligibility for burial as follows:

1. The surviving spouse of the lot owner shall have the first right to interment or to direct the right of interment.

2. When there is no surviving spouse, the devisees, or heirs of the owners, may by agreement in writing, determine who among them shall have the right of interment or direction for interment, which agreement shall be filed with the cemetery manager.

3. In the event the owner, his devisees or heirs shall not have arranged for future interments, then the devisees or the heirs, as the case may be, of such owner, shall have the right to interment in order of their need.

C. All burial rights in cemetery lots purchased from the city occupy the same position as real estate at the death of the owner. Only such persons whose names appear on the cemetery records of the city will be recognized as owners or part owners of lots. In case of the death of a lot owner, when the cemetery lot is disposed of by a will, and when ownership is to be determined, a certified copy of the will must be delivered to the cemetery manager before the city will recognize the change of ownership. If the deceased lot owner left no will, satisfactory proof of descent must be provided. It is recommended that lot owners, in making their wills, include a provision covering the cemetery lots and devise same to one person.

D. Lot owners may not resell or transfer their lots or parts of lots except as outlined below:

1. The cemetery manager shall enter in the record kept for that purpose all deeds of transfer and reconveyance of cemetery lots. No such reconveyance shall be received and recorded by the cemetery manager until the fee listed in ss. 2.84.160 E. has been paid.

2. Said fee shall be in the cemetery revenue accounts.

3. Reconveyance of lots or parts of lots may be made only by written application therefor upon blanks furnished by the cemetery manager, the same to be approved by the city manager. Such application shall be executed by the owner(s) of the lots, or if the owner(s) is deceased, by the legal heirs. The application shall state the lot and block number. (Ord. 6258 §2, 2002; Ord. 5558 §3, 1995; Ord. 3123 §I(part), 1970; Prior code §13.25 Rule I B).

2.84.060 Cemetery maintenance and care. The city of Eau Claire is committed to the maintenance of its cemeteries and shall provide for the care of cemetery grounds, to include: turf, leaf disposal, filling sunken graves, raising markers, roads, fences, trees and shrubs, buildings and chapel maintenance. Lot owners or residents who wish to consult with the cemetery manager about said care should feel free to do so. (Ord. 6258 §3, 2002; Ord. 6258 §3, 2002; Ord. 5558 §4, 1995; Charter Ord. 3778 §12(part), 1977; Ord. 3123 §I(part), 1970; Prior code §13.25 Rule I C).

2.84.070 Privileges and restrictions. A. Each lot in the cemetery will, prior to its sale, be suitably marked by the city with a metal, brick, or concrete post placed on each lot corner and set level with the adjacent ground. To maintain accuracy and uniformity of marking, substitutes or additional corner posts may be used only if approved by the city.

B. No mound shall be raised upon any grave above the general level of the lot.

C. No hedges, fences, or enclosures of any kind will be permitted on or around lots. Wooden boxes, wire containers, glass jars, bottles, toys, cans, ring urns and other such objects may not be placed on lots and if so placed, will be removed by the city without notice. Urns are not permitted on lots sold after the passage of the ordinance codified herein. Existing urns shall be removed by the city as they become unsightly or deteriorated and shall not be replaced.

D. The city reserves the right for its employees and those persons necessary to the performance of normal cemetery operation to enter upon or cross over any lot in the cemetery in the performance of such duties.

E. The city, or its employees, assumes no liability for damages to property or of person, or for physical or mental suffering arising out of the performance of its normal operation; or for loss by vandalism or other acts beyond its reasonable control.

F. The city reserves the right to alter, change or close alleys, roadways, water mains, and other physical public properties of the cemetery. (Ord. 6258 §4, 2002; Ord. 3123 §I(part), 1970; Prior code §13.25 Rule I D).

2.84.080 Rules for visitors. Visiting rules shall be as follows:

A. The cemetery will be open to visitors at all times between the hours of 8:00 a.m. and one-half hour after the official sunset. Permission to enter the cemetery at any other time must be obtained from the cemetery manager or the police department.

B. Persons or picnic parties, with refreshments, will not be admitted, unless permitted by the cemetery manager.

C. Dogs will only be allowed in the cemeteries when confined in a vehicle or controlled by a leash.

D. Firearms will not be allowed in the cemetery except in conjunction with military funerals. At all other times, firearms, bows and arrows, slingshots, and other like articles will not be allowed.

E. Visitors are required to use the walks and drives whenever possible, and shall not pick any flowers (either wild or cultivated), injure any shrub, tree, or plant, or mar or deface any monument, stone, or structure in the cemetery.

F. Vehicles traveling within the cemetery shall not exceed 5 miles per hour. For purposes of this ordinance, vehicles shall include cars, trucks, bicycles, and motorcycles. Vehicular travel within the cemeteries by visitors shall be limited to asphalt and gravel roadways. (Ord. 6258 §5, 2002; Ord. 5558 §5, 1995; Ord. 3123 §I(part), 1970; Prior code §13.25 Rule I E).

2.84.090 Interments. A. All interments shall be made in a permanent outer container that shall not be constructed of wood.

B. All graves shall be dug by the city under the direction of the cemetery manager. Depth of graves shall conform to the Wisconsin State Board of Health specifications.

A charge for opening and closing a grave including the sodding and seeding of the plot will be made at a current rate set by the city. Said charge for opening of a grave, removal of excess material, refilling and sodding shall be paid within a reasonable period of time but not to exceed one hundred twenty days.

C. No burial will be permitted until a legal burial transit permit has been presented to the cemetery manager. The interment of bodies of persons who have died of contagious disease shall be in strict accordance with the rules of the State Board of Health.

D. The lot owner or funeral director shall designate on the interment form the location of the graves on the lot to the cemetery manager and any change of location made after the opening of a grave has begun shall be at the expense of the lot owner. When definite information for locating a grave is not available thirty-six hours prior to grave preparation to meet the time requested for interment, the cemetery may exercise its best judgment in making a location in order that the requested time for interment may be met. The cemetery assumes no responsibility for any error or inconvenience of such location and an additional charge will be made for nay change requested.

E. The cemetery manager shall whenever possible be given thirty-six hours' notice to assure the opening and preparation of a grave prior to interment. Banning unforeseen or other untoward circumstances such grave shall be opened and prepared in time for interment.

F. When several burials occur in a one or two day period, these burials may be scheduled at the discretion of the cemetery manager but in a prompt and efficient manner.

G. There will be no responsibility on the part of the city for the protection and maintenance of flowers, wreaths, emblems, etc. used in conjunction with funerals.

H. The interment of two bodies in one grave will not be allowed, except in the case of a mother and infant, twin children, two children buried at the same time, or in special circumstances with the approval of the cemetery manager. From one to four cremains will be allowed on a single gravesite. Combined vault space shall not exceed seven feet six inches in multiple interments. (Ord. 6258 §6, 2002; Ord. 5558 §6, 1995; Ord. 3123 §I(part), 1970; Prior code §13.25 Rule I F).

2.84.100 Disinterments. A. Disinterment of bodies from graves in the cemetery will be made only by the city in accordance with the requirements of the State Board of Health. Charges set by the city for removal must be paid in advance.

B. Lot owners, or their heirs, desiring graves opened may secure the necessary disinterment permit from the state and deliver same to the cemetery manager. All removals will be made by the city under the supervision of a licensed embalmer.

C. For sanitary reasons graves will not be reopened for inspection except for official investigation. (Ord. 5558 §7, 1995; Ord. 3123 §I(part), 1970; Prior code §13.25 Rule I G).

2.84.110 Monuments and markers. A. Grave markers and foundations shall be set only by the monument company according to regulations specified by the city. Except as herein otherwise provided, under no conditions will the city construct monument or marker bases or erect monuments or markers on bases. The city reserves the right to require the construction of a foundation of such size, material, and design as will provide ample insurance against settlement or injury to the stone work. The top of the concrete foundation shall be constructed flush with the ground line. All monuments and markers shall be set on a cement foundation that provides for a 5-inch border around the monumentation. A permit shall be available from the office of the cemetery manager.

B. All national and state markers that cannot be set by a monument company at a reasonable fee will be set by the city at cost. The setting of monuments, stones, and markers and the transportation of all tools, materials, etc., within the cemetery ground shall be subject to the supervision and control of the cemetery manager. Unless special arrangements are made with the cemetery manager, such work shall be conducted between the hours of 8:00 a.m. and 4:00 p.m., Monday through Friday, except on national holidays. Whenever possible, at least 24 hours notice shall be given to the cemetery manager that said work is to take place. Heavy trucking will not be permitted within the cemetery when, in the opinion of the cemetery manager, such work may cause damage to the driveways. Except when special permission is obtained, all work as outlined above shall be completed and debris removed immediately.

C. Two markers may be set on a single grave space if approved by the cemetery manager. One of these markers must be a flush or foot marker. Monuments will be allowed on single grave

spaces if they complement the appearance of the surroundings and are set on a plate that is no greater than 40 inches in length. Only 2 markers will be allowed on a grave space, one of which shall be flush with the ground and of a size that meets the approval of the cemetery manager. The city reserves the right to refuse the placement of any marker or monument that the cemetery manager feels affects the good appearance of the cemetery grounds or adversely affects the maintenance of said grounds. More than one cremains may be buried in a single grave space.

D. Monument specifications. In sections L, M, N, and O of Forest Hill and I and J of Lakeview a minimum of 2 graves spaces must be purchased. The base of all monuments shall be above ground, between 42 inches and 48 inches in length and no wider than 14 inches. The die/tablet thickness shall be between 6 inches and 8 inches. The size of the monument and/or stonework must be given to the cemetery manager and approved before said work will be permitted on a lot. All monuments must be set in line with other monuments so far as possible as directed by the cemetery manager.

E. Grave marker specifications. In lots where grave markers are specified, the maximum height shall be 16 inches, the maximum length shall be 54 inches on double lots and 30 inches on single lots and the maximum width shall be 14 inches.

F. Flush marker specifications. In lots where flush markers are specified, the maximum length shall be 54 inches on double lots and 30 inches on single lots and the maximum width shall be 14 inches. The markers and borders shall be even with the existing grade.

G. Private estate crypt special conditions. Because of the numerous styles of private crypts, special conditions concerning their construction and installation apply. The monument company shall submit a written proposal to the cemetery manager for consideration of each individual crypt. This proposal shall contain a design of the crypt to include base and footing designs, construction materials to be used, color of exterior granites, warranty information, installation schedules, and the number of lots requested. Lot sale transactions with the future deed holder shall be concluded prior to crypt installation. The cemetery manager shall determine the appropriate number of lots to be purchased for each crypt.

H. Because of the various styles of veterans plaques and markers available and also the multiple options for mounting same, the cemetery manager shall determine acceptable applications.

I. Monument, grave marker (flat, bevel, or slant), flush marker, and private estate crypt lot regulations shall be indicated in the Rules and Regulations Pamphlet for each cemetery.

J. Stone work or monument work, once placed on a foundation, shall not be removed, except by permission of the cemetery manager.

K. The lot must be paid in full or other assurance given of payment before markers and monuments are set.

L. Temporary markers shall be removed at the end of 6 months and replaced with a permanent marker within one year.

M. No person shall erect, construct, or install in any cemetery a candle or fuel-powered device which is designed and intended to produce a memorial flame for a continuous and indefinite period. This section shall not prohibit any such candle or device that has been installed and is in operation prior to the effective date of this section. (Ord. 6258 §7, 2002; Ord. 5558 §8, 1995; Ord. 4744, 1987; Ord. 4682, 1986; Ord. 3958 §1, 1979; Ord. 3123 §I(part), 1970; Prior code §13.25 Rule I H).

2.84.120 Monumentation structures. The construction and/or placement of any interment structure or monumentation structure is prohibited without the permission of the cemetery manager. (Ord. 6258 §8, 2002; Ord. 3123 §I(part), 1970; Prior code §13.25 Rule I I).

2.84.130 Trees, shrubs, and flowers. A. Trees and shrubs.

1. The planting of trees and shrubs will not be permitted without the permission of the city forester/cemetery manager. Any tree or shrub maintenance or removal shall be performed by the city at city expense and under the direction of the city forester.

2. The cemetery manager shall accept donations from individuals requesting the planting of trees as living memorials. All costs related to the purchase shall be paid by the donator. The city shall plant and maintain the donated trees. The cemetery manager/city forester shall determine the appropriate site, and the species and size of tree to be donated.

B. Flowers. Special regulations.

1. Displays of flowers in sections D, I, J, and K of Lakeview and sections N and O of Forest Hill shall be in a single pedestal type urn, which shall be set at the backside or side of the markers in straight rows. The metal pedestal pole shall not exceed 2 inches in diameter and shall be painted green. The distance from the bottom of the urn holder to the top of the marker border shall be 22 inches, and the urn shall be round and not less than 10 inches nor more than 14 inches in diameter.

C. Flowers - General regulations.

1. Fresh cut flowers may be placed anytime and will remain until, in the judgment of the cemetery manager, they become unsightly. Containers for cut flowers shall be of a type that is level with the ground and can be disposed of when the flowers are removed.

2. Individual flowerbeds of growing plants may be allowed if maintained at a reasonable size and only with the approval of the cemetery manager. If these are not maintained and/or become unsightly, they will be removed by the city.

3. Potted plants may be set on lots with the approval of the cemetery manager. They will be removed if they are not maintained and/or have become unsightly.

4. No living plant within the cemetery will be removed, cut, or transplanted without the approval of the cemetery manager.

D. Other decorations.

1. Artificial plants and flowers must be in a vase or pot and will be treated as a potted plant.

2. Wreaths may be placed between November 15 and March 15 only.

3. All other artificial decorations, such as, statues, dolls, birdfeeders, toys, and plant hangers are prohibited unless approved by the cemetery manager. (Ord. 6258 §9, 2002; Ord. 5558 §9, 1995; Ord. 3123 §I(part), 1970; Prior code §13.25 Rule I J).

2.84.140 Baby section. An area in section "F" in Lake View and section "M" in Forest Hill Cemeteries will be established for the purpose of infant burial. Each grave site will be required to have a flush marker eight inches by sixteen inches installed within one year. There will be no flowers permitted on grave sites in the baby section. (Ord. 3123 §I(part), 1970; Prior code §13.25 Rule I K).

2.84.160 Fees and charges. Fees and charges shall be as stated in the City of Eau Claire Fees and Licenses Schedule.

A. Repealed by ordinance no. 6363.

B. Repealed by ordinance no. 6363.

C. Repealed by ordinance no. 6363.

D. Repealed by ordinance no. 6363.

E. Repealed by ordinance no. 6363.

F. Repealed by ordinance no. 6363.

G. Receipts will be issued for all fees and charges as outlined in the current schedule of fees and charges.

H. A schedule of fees and charges, as established by the city council, shall be on file in the office of the cemetery manager and the city clerk. Such schedule may change from time to time without advance notice to conform to current economic conditions. (Ord. 6363 §3, 2002; Ord. 6258 §11, 2002; Ord. 6132 §1, 2001; Ord. 6009 §1, 1999; Ord. 5920, 1999; Ord. 5671, 1996; Ord. 5375, 1993; Ord. 5275 §1, 1992; Ord. 5170, 1991; Ord. 5075 §1, 1990; Ord. 4555, 1985; Ord. 4166, 1981; Ord. 3977 §1, 1979; Ord. 3951 §1, 1979; Ord. 3517 (part), 1975; Ord. 3123 §I(part), 1970; Prior code §13.25 Rule II).

2.84.165 Special regulations pertaining to columbaria. A. General rules.

1. A columbarium consists of niches for cremation interments only. No columbarium shall be used for any purpose other than the interment of human cremains (ashes). A niche can house up to two cremains.

2. Containers and/or urns (vases) in companion niches may not exceed a base width of 5 1/2 inches by 5 1/2 inches by 7 inches in height and length (212 cubic inches) and shall be sealed and inscribed or marked in permanent ink with the name and date of death of the deceased.

3. Partial body cremains are acceptable in the container or urn. However, any request to add additional cremains to the container or urn, whether that of a deceased family member or that of the same person, will not be allowed except by special permission of the cemetery manager or his or her agent and payment of applicable interment fees.

4. When two cremains exist in an acceptable container, they shall be considered as two interments even though they are in one container.

5. Bronze plaques shall be placed on the niche faceplate to identify the occupant(s). Size, style, layout, and arrangements for placement shall be determined by the cemetery manager or his or her agent. No painting, decorating, defacing or alteration of the columbarium shall be permitted in any way.

B. Interments.

1. No niche shall be used for the interment of cremains until all fees have been fully paid, including interment fees. The cemetery manager or his or her agent will authorize placement of containers within a niche only after verification of payment of fees has been made.

2. If the person(s) to be interred is not the owner, the owner must authorize the interment in writing and such authorization must be notarized.

3. All interment requests shall be reviewed and approved by the cemetery manager or his or her agent prior to the actual interment.

C. Disinterments

1. The removal of cremains from a columbarium shall comply strictly with the following provisions:

a. The person(s) wishing to remove cremains must have a legal right to manage the cremains and must be next of kin.

b. The person(s) wishing to remove cremains must provide acceptable proof of identity, as determined by the cemetery manager or his or her agent.

c. The request for removal of cremains must be approved by the surviving spouse of the decedent. If there is no surviving spouse, the removal of cremains must be approved by all of the living children of the decedent. If there are no living children, the removal of cremains must be approved by all living parents of the decedent. If there are no living parents, the removal of cremains must be approved by all living siblings of the decedent. In any case, a notary public must confirm each individual signature.

d. The request for cremains removal must be approved by the cemetery manager or his or her agent before removal may occur.

e. If satisfactory documentation is not provided to remove cremains, the cemetery manager or his or her agent will deny the request for cremains removal. His or her decision will be final.

f. The request for removal of cremains must be accompanied by the payment of all costs incurred by the city of Eau Claire associated with cremains removal.

g. The cemetery manager or his or her agent shall amend the records to reflect the removal of the cremains.

h. The applicant must indemnify and hold harmless the city of Eau Claire from any and all actions which may result from the disinterment.

D. Transfer of ownership. Niche ownership shall not be transferred without first obtaining the approval of the cemetery manager or his or agent. If a niche owner desires to transfer title of a niche which has a plaque, said plaque shall be removed by the city, and the new owner, once approved, shall be responsible for fees to purchase and install a new plaque on the front of the niche. The transfer fee shall be paid prior to administering and recording an approved transfer.

E. Niche fees and administration. Whether a niche is purchased for and is classified “individual” (one cremains) or “companion” (two cremains), the niche prices shall be as stated in the City of Eau Claire Fees and Licenses Schedule and will include the purchase and installation of the bronze name and date plaque on the face of the niche. In the event a niche is purchased and classified as an “individual” niche, the owner and his or her heirs may request in writing to the cemetery manager or his or her agent that the niche be reclassified to “companion” status and pay the city an opening fee and a replacement fee for a companion plaque. (Ord. 6363 §3, 2002; Ord. 6258 §12, 2002; Ord. 6132 §2, 2001; Ord. 6009 §2, 1999; Ord. 5869, 1998).

2.84.200 Section created for veterans. A. The following lots in section "G" of Lakeview Cemetery are set apart for the burial of veterans of the armed forces:

Lots 320 to 334, both inclusive;
Lots 337 to 352, both inclusive;
Lots 373 to 385, both inclusive;
Lots 396 to 408, both inclusive;
Lots 429 to 440, both inclusive;
Lots 454 to 461, both inclusive.

B. Burial space shall be reserved for deceased members or veterans of the armed forces of the United States who do not have a family burial lot, or who, for circumstances which, in the opinion of the city council warrant, are entitled to such space. (Ord. 6258 §14, 2002; Prior code §13.26).

2.84.210 Penalty. Any person violating any of the provisions of this chapter shall, on conviction thereof, forfeit not less than five dollars nor more than one hundred dollars for each violation together with the costs of prosecution and in default of the payment of such forfeiture and costs shall be imprisoned in the county jail of Eau Claire County for a term of not more than thirty days. Each day after one week from date of conviction that a violation of this chapter continues shall be deemed a separate offense. (Ord. 3123 §I(part), 1970; Prior code §13.25 Rule H).

Chapter 2.88

EMERGENCY PREPAREDNESS

Sections:

2.88.010 Appointment; powers, duties and responsibilities.

2.88.010 Appointment; powers, duties and responsibilities. Pursuant to s. 323.14(4), Wis. Stats., the city manager is appointed the head of emergency government for the city. The city manager shall possess and exercise the powers and duties and assume those responsibilities as prescribed by ch. 323, Wis. Stats. The city manager may delegate such function to a subordinate. (Ord. 4993, 1989).

Chapter 2.92

CITY PROCUREMENT

Sections:

2.92.010 Purpose--Rules of construction.
2.92.020 Requirement of good faith.
2.92.030 Application.
2.92.040 Determinations.
2.92.050 Definitions.
2.92.060 Purchasing agent.
2.92.070 Authority of the purchasing agent.
2.92.075 Creation of procurement policy.
2.92.080 Delegation of authority.
2.92.090 Centralization of procurement authority.
2.92.100 Methods of source selection.
2.92.110 Competitive sealed bidding.

2.92.120 Competitive sealed proposals.
2.92.130 Small purchases.
2.92.140 Sole source procurements.
2.92.150 Emergency procurements.
2.92.155 Cooperative purchasing.
2.92.160 Modification of contracts.
2.92.170 Cancellation of invitation for bids or requests for proposals.
2.92.180 Finality of determinations.
2.92.190 Specifications--Duties of purchasing agent.
2.92.195 Contractual remedies.
2.92.200 Supply management.
2.92.210 Prevailing wage on building or work financed in whole or in part with city financial assistance. Repealed 2015.
2.92.215 Regulation of public work. Repealed 2015.
2.92.220 Ethics in public contracting.
2.92.230 Employee disclosure requirements.
2.92.240 Gratuities and kickbacks.
2.92.250 Restrictions on employment of present and former employees.
2.92.260 Prohibition against contingent fees.
2.92.270 Use of confidential information.
2.92.280 Public access to procurement information.
2.92.290 Civil and administrative remedies.
2.92.300 Civil and administrative remedies against nonemployees.
2.92.310 Recovery of value transferred or received.
2.92.320 Waiver.

2.92.010 Purpose--Rules of construction. A. Interpretation. This chapter shall be construed and applied to promote its underlying purposes and policies.

B. Purposes. The underlying purposes and policies of this chapter are:

1. To simplify, clarify, and modernize the law governing procurement by this city;
2. To permit the continued development of procurement policies and practices;
3. To make as consistent as possible the procurement laws among the various governmental bodies;
4. To provide for increased public confidence in the procedures used in public procurement;
5. To ensure the fair and equitable treatment of all persons who deal with the procurement system of this city;
6. To provide increased economy in city procurement activities and to maximize to the fullest extent practicable the purchasing value of public funds of the city;
7. To foster effective broad-based competition within the free enterprise system; and
8. To provide safeguards for the maintenance of a procurement system of quality and integrity. (Ord. 4051(part), 1980).

2.92.020 Requirement of good faith. This chapter requires all parties involved in the negotiation, performance, or administration of city contracts to act in good faith. (Ord. 4051(part), 1980).

2.92.030 Application. A. General Application. This chapter applies only to contracts solicited or entered into after the effective date of this chapter (February 28, 1980) unless the parties agree to its application to a contract entered into prior to the effective date.

B. Application to City Procurement. This chapter shall apply to every expenditure of public funds regardless of source, including state and federal assistance moneys, by this city, under any contract, except that nothing in this chapter shall prevent the city from complying with the terms and

conditions of any grant, gift or bequest or cooperative agreement. This chapter shall apply to the disposal of city supplies.

C. Effect of State or Federal Assistance Requirements. In the event state or federal assistance requirements conflict with the provisions of this chapter, nothing in this chapter shall prevent the city from complying with the terms and conditions of the federal assistance requirements. (Ord. 4051(part), 1980).

2.92.040 Determinations. Written determinations and findings required by this chapter shall be retained in an appropriate official contract file in the office of the purchasing agent. (Ord. 4051 (part), 1980).

2.92.050 Definitions. Unless the context clearly required otherwise, the words defined in this section shall have the meanings set forth below whenever they appear in this chapter:

A. "Blind trust" means an independently managed trust in which the employee-beneficiary has no management rights and in which the employee-beneficiary is not given notice of alterations in or other dispositions of the property subject to the trust.

B. "Business" means any corporation, partnership, individual, sole proprietorship, joint stock company, joint venture, or any other legal entity.

C. "Confidential information" means any information which is available to an employee only because of the employee's status as an employee of this city and is not a matter of public knowledge or available to the public on request.

D. "Construction" means the process of building, altering, repairing, improving, or demolishing any public structure or building, or other public improvements of any kind to any public real property. It does not include the routine operation, routine repair, or routine maintenance of existing structures, buildings, or real property.

E. "Contract" means any type of city agreement, regardless of what it may be called, for the purchase or disposal of supplies, services, or construction. It includes contracts of a fixed-price, cost, cost-plus-a-fixed fee, or incentive type; contracts providing for the issuance of job or task orders; leases; letter contracts; and purchase orders. It also includes supplemental agreements with respect to any of the foregoing.

F. "Contractor" means any person or business having a contract with the governmental body.

G. "Cooperative purchasing" means procurement conducted by, or on behalf of, more than one public procurement unit.

H. "Debarment" means the disqualification of a person or business to receive invitations for bids or requests for proposals, or the award of a contract by the city for a specified period of time commensurate with the seriousness of the offense or the failure or the inadequacy of performance.

I. "Designee" means a duly authorized representative or a person holding a superior position.

J. "Employee" means an individual drawing a salary from the city, whether elected or not, and any uncompensated individual performing personal services for the city.

K. "Excess supplies" means supplies having a remaining useful life but which are no longer required by the using agency in possession of the supplies.

L. "Financial interest" means:

1. Ownership of any interest or involvement in any relationship from which, or as a result of which, a person within the past year has received, or is presently, or in the future may receive, any financial benefit;

2. Ownership of any interest in any business; or

3. Holding a position in a business such as an officer, director, trustee, partner, employee, or similar position, or holding any position of management.

M. "City" means the city of Eau Claire and shall include the city council and any department, commission, council, board, bureau, committee, institution, authority, agency, government corporation, or other establishment or official of the government of this city, including the city-county health department, but not including the Eau Claire area school district.

N. "Gratuity" means a payment, loan, subscription, advance, deposit of money, service, or anything of any monetary value, present or promised, unless consideration of substantially equal or greater value is received.

O. "Immediate family" means a spouse, children, parents, brothers and sisters, and grandparents.

P. "Invitation for bids" means all documents, including those attached or incorporated by reference, utilized for soliciting bids.

Q. "Procurement" means the buying, purchasing, renting, leasing or otherwise obtaining any supplies, services, or construction. It also includes all functions that pertain to the obtaining of any supply, service, or construction, including description of requirements, selection and solicitation of sources, preparation and award of contract, and all phases of contract administration.

R. "Purchasing agent" means the person holding the position created by Section 2.92.060 as the head of the central purchasing office of the city of Eau Claire.

S. "Request for proposals" means all documents, including those attached or incorporated by reference, utilized for soliciting proposals.

T. "Responsible bidder" means a person who has the capability in all respects to perform fully the contract requirements, and the integrity and reliability which will assure good faith performance.

U. "Responsive bidder" means a person who has submitted a bid which conforms in all material respects to the invitation for bids.

V. "Services" means the furnishing of labor, time, or effort by a contractor, not involving the delivery of a specific end product other than reports which are merely incidental to the required performance. This term includes "professional services" but it does not include employment agreements or collective bargaining agreements.

W. "Specifications" means any description of the physical or functional characteristics, or of the nature of, a supply, service, or construction item. It may include a description of any requirement for inspecting, testing, or preparing a supply, service, or construction item for delivery.

X. "Supplies" means all property, including but not limited to equipment, parts, materials, printing, insurance, and leases on real and personal property, excluding land or a permanent interest in land.

Y. "Surplus supplies" means any supplies no longer having any use to the city. This includes obsolete supplies, scrap materials, and nonexpendable supplies that have completed their useful life cycle.

Z. "Suspension" means the disqualification of a person to receive invitations for bids or requests for proposals or the award of a contract by the city, for a temporary period pending the completion of an investigation, or during any legal proceedings that may ensue because a person is suspected upon probable cause of engaging in criminal, fraudulent, or seriously improper conduct or failure or inadequacy of performance which may lead to debarment.

AA. "Using department" means any department, commission, council, board, bureau, committee, institution, authority, agency, government corporation, or other establishment or official of the government of this city, including the city-county health department, but not including the Eau Claire area school district which utilizes any supplies, services, or construction purchased under this chapter. (Ord. 4051 (part), 1980).

2.92.060 Purchasing agent. A division of purchasing is created within the department of finance, which shall be headed by the purchasing agent. The director of the department of finance, with the approval of the city manager, shall appoint the purchasing agent. The purchasing agent shall have a minimum of five years' experience in the purchasing of supplies, services and construction within the twelve years preceding the date of this appointment. Such five-year experience requirement may be satisfied by any combination of job experience and educational training, provided that two years of educational training shall be equal to one year of job experience for the purpose of fulfilling this requirement. The purchasing agent shall also be an individual with demonstrated executive and organizational ability. The purchasing agent shall be a full-time public official of the city and may be removed from office, after the probationary period, only upon a showing of just cause. (Charter Ord. 4491, 1984; Ord. 4051(part), 1980).

2.92.070 Authority of the purchasing agent. A. Principal Contracting Officer. The purchasing agent shall serve as the principal contracting officer and central procurement officer of the city.

B. Power to Adopt Internal Operational Procedures. Consistent with the provisions of this chapter, the purchasing agent may adopt internal operational procedures governing the city purchasing division.

C. Duties. Except as otherwise specifically provided in this chapter, the purchasing agent shall, in accordance with policy approved by the city manager:

1. Procure or supervise the procurement of all supplies, services, and construction needed by the city;

2. Exercise supervision and control over all inventories of supplies belonging to the city;

3. Sell, trade, or otherwise dispose of surplus supplies belonging to the city;

4. Establish and maintain programs for the inspection, testing, and acceptance of supplies, services, and construction; and

5. Administer a risk management program. (Ord. 4051 (part), 1980).

2.92.075 Creation of procurement policy. Except as otherwise provided in this chapter, the city manager shall have the authority and responsibility to promulgate and approve the procurement policy of the city of Eau Claire, but the city manager shall not exercise authority over the award or administration of any particular contract or any dispute, claim or litigation pertaining thereto. (Ord. 4051(part), 1980).

2.92.080 Delegation of authority. Subject to policy approved by the city manager, the purchasing agent may delegate authority to designees or to any department. (Ord. 4051 (part), 1980).

2.92.090 Centralization of procurement authority. All rights, powers, duties, and authority relating to the procurement of supplies, services, and construction, and the management, control, warehousing, sale, and disposal of supplies, services, and construction now vested in or exercised by any using department and regardless of source of funding, are hereby transferred to the city manager and the purchasing agent.

A. Relationship with Using Departments. The purchasing agent shall obtain expert advice and assistance from personnel of using departments in the development of specifications and may delegate in writing to a using department the approval and authority to prepare and utilize its own specifications.

B. Collection of Data Concerning Procurement. The purchasing agent shall cooperate with the comptroller in the preparation of statistical data concerning the procurement, usage, and disposal of all supplies, services, and construction. All using departments shall furnish such reports as the purchasing agent may require concerning usage, needs, and stocks on hand, and the purchasing agent shall have authority to prescribe forms to be used by the using departments in requisitioning, ordering, and reporting of supplies, services, and construction. (Ord. 4051(part), 1980).

2.92.100 Methods of source selection. Unless otherwise authorized by law, all city contracts shall be awarded by competitive sealed bidding, pursuant to Section 2.92.110, except as provided in Sections 2.92.120 through 2.92.170. (Ord. 4051(part), 1980).

2.92.110 Competitive sealed bidding. A. Invitation for Bids. Where competitive sealed bidding is utilized, an invitation for bids shall be issued which shall include a purchase description and all contractual terms and conditions applicable to the procurement.

B. Public Notice. Adequate public notice of the invitation for bids shall be given a reasonable time prior to the date set forth therein for the opening of bids, as required by law, or in accordance with policy approved by the city manager. Such notice may include publication in a newspaper of general circulation a reasonable time prior to bid opening.

C. Bid Opening. Bids shall be opened publicly in the presence of one or more witnesses at the time and place designated in the invitation for bids. The amount of each bid, and such other relevant information as may be specified in the invitation for bids, together with the name of each bidder, shall be recorded. The record and each bid shall be open to public inspection.

D. Bid Acceptance and Bid Evaluation. Bids shall be unconditionally accepted without alteration or correction, except as authorized in this chapter. Bids shall be evaluated based on the requirements set forth in the invitation for bids, which may include criteria to determine acceptability such as inspection, testing, quality, workmanship, delivery and suitability for a particular purpose. Those criteria that will affect the bid price and which will be considered in evaluation for award shall be objectively measurable, such as discounts, transportation costs, and total or life cycle costs. The invitation for bids shall set forth the evaluation criteria to be used. No criteria may be used in bid evaluation that are not set forth in the invitation for bids.

E. Award. The contract shall be awarded with reasonable promptness by written notice to the lowest responsible and responsive bidder whose bid meets the requirements and criteria set forth in the invitation for bids. In the event all bids exceed available funds as certified by the appropriate fiscal officer and the low responsive and responsible bid does not exceed such funds by more than five percent, the purchasing agent is authorized, where permitted by law, in situations where time or economic considerations preclude resolicitation of work or a reduced scope, to negotiate an adjustment of the bid price, including changes in the bid requirements, with the low responsive and responsible bidder, in order to bring the bid within the amount of available funds.

F. Multi-step Sealed Bidding. When it is considered impractical to initially prepare a purchase description to support an award based on price, an invitation for bids may be issued requesting the submission of unpriced offers to be followed by an invitation for bids limited to those bidders whose offers have been qualified under the criteria set forth in the first solicitation. (Ord. 4051 (part), 1980).

2.92.120 Competitive sealed proposals. A. Conditions for Use. When the purchasing agent, in accordance with policy approved by the city manager, determines in writing that the use of competitive sealed bidding is not required by law and is either not practicable or not advantageous to the city, a contract may be entered into through receipt of competitive sealed proposals. Competitive sealed proposals may also be used for the procurement of professional services whether or not the written determination described herein has been made. Further, if it is the written determination of a majority of a group consisting of the city manager, purchasing agent, and representative of the department expecting to utilize such professional services that the competitive sealed proposal procedure is impractical or otherwise unsuitable, the procurement of the necessary professional service may be made on the basis of noncompetitive negotiations without regard to Sections 2.92.120 and 2.92.130.

B. Request for Proposals. Competitive sealed proposals shall be solicited through a request for proposals.

C. Public Notice. Adequate public notice of the request for proposals shall be given in the same manner as provided for competitive sealed bidding in Section 2.92.110.

D. Receipt of Proposals. Proposals shall be opened so as to avoid disclosure of contents to competing offerors during the process of negotiation. A register of proposals shall be prepared and open for public inspection.

E. Evaluation Factors. The request for proposals shall state the relative importance of the evaluation factors and price.

F. Discussion with Responsible Offerors and Revisions of Proposals. As provided in the request for proposals, discussions may be conducted with responsible offerors who submit proposals determined to be reasonably susceptible of being selected for award for the purpose of clarification to assure full understanding of, and responsiveness to, the solicitation requirements. Offerors shall be accorded fair and equal treatment with respect to any opportunity for discussion and revision of proposals, and such revisions may be permitted after submission and prior to award for the purpose of obtaining best and final offers. In conducting discussions, there shall be no disclosure of any information derived from proposals submitted by competing offerors.

G. Award. Award shall be made to the responsible offeror whose proposal is determined in writing to be the most advantageous to the city, taking into consideration the evaluation factors set forth in the request for proposals, and price. No other factors or criteria shall be used in the evaluation. The contract file shall contain the basis on which the award is made. (Ord. 4051(part), 1980).

2.92.130 Small purchases. Except as otherwise required by law, any procurement not exceeding the amount established by city procurement policy may be made in accordance with small purchase procedures approved by the city manager; provided, however, that procurement requirements shall not be artificially divided so as to constitute a small purchase under this section. If the actual price of a procurement obtained through such small purchases procedure exceeds, by fifteen percent or more, the maximum amount established by such policy, the purchasing agent may determine that the procurement be made using Section 2.92.110 or Section 2.92.120. (Ord. 4051(part), 1980).

2.92.140 Sole source procurements. Where permitted by law a contract may be awarded for a supply, service, or construction without competition when the purchasing agent or designee determines in writing that there is only one source for the required supply, service, or construction. (Ord. 4051(part), 1980).

2.92.150 Emergency procurements. A. The purchasing agent or a designee shall be empowered to determine and declare the existence of an emergency, as provided under sec. 62.15(1b), Wis. Stats., when damage or threatened damage to public facilities endangers the health or welfare of the public. Immediately upon making such determination, the purchasing agent shall certify to the city manager the existence of the emergency and the basis for such determination, and shall describe the course of action taken or proposed to be taken.

B. The purchasing agent or a designee may make or authorize others to make emergency procurements when there exists a threat to public health or welfare under emergency conditions as defined in paragraph A. and as defined in policy approved by the city manager for procurements not governed by sec. 62.15, Wis. Stats., provided that such emergency procurements shall be made with such competition as is practicable under the circumstances. A written determination of the basis for the emergency and for the selection of the particular contractor shall be included in the contract file. (Charter Ord. 4646 §2, 1986; Ord. 4051(part), 1980).

2.92.155 Cooperative purchasing. The purchasing agent may do any of the following, without regard to any other provision of ch. 2.92, if the same is permitted by federal or state law:

A. Where a federal, state or local government, or a cooperative purchasing group made up of purchasing officers from a federal, state or local government, has awarded a contract for the purchase of supplies, equipment, services or construction, the purchasing agent may, using the same terms and conditions of the contract, purchase or lease the same supplies, equipment, service or construction from the vendor to whom that contract was awarded.

B. Purchase, lease, acquire or use any new, used, surplus or excess supplies, equipment, facilities and services, including construction services, directly from a federal, state or local government if the purchasing agent determines that such purchase, lease, acquisition or use is in the city's best interest.

C. Participate in cooperative purchasing agreements with federal, state or local governments.

D. Sell any supplies, services, equipment or facilities to another unit of federal, state or local government.

E. Enter into agreements for the common use or lease of facilities with other units of federal, state or local government under the terms agreed upon by the parties. (Ord. 6035, 2000; Ord. 5652, 1996).

2.92.160 Modification of contracts. The purchasing agent, after consultation with the city attorney and with the approval of the city manager, may modify or delete existing and add new contractual provisions and clauses to all forms of supply, service and construction contracts utilized by the city, provided that such modification, deletions, or additions are supported by a written determination. (Ord. 4051(part), 1980).

2.92.170 Cancellation of invitation for bids or requests for proposals. An invitation for bids, a request for proposals, or other solicitation may be delayed or cancelled, or all bids or proposals may be rejected in whole or in part as may be specified in the solicitation, only if it is

determined in writing by the purchasing agent that such action is taken in the best interests of the city. (Ord. 4051(part), 1980).

2.92.180 Finality of determinations. The determinations required by Sections 2.92.110, 2.92.120, 2.92.140, 2.92.150, 2.92.160 and 2.92.170 are final and conclusive unless they are clearly erroneous, arbitrary, capricious, or contrary to law. (Ord. 4051 (part), 1980).

2.92.190 Specifications--Duties of purchasing agent.

A. The purchasing agent shall prepare, issue, revise, maintain, and monitor the use of specifications for supplies, services, and construction required by the city, provided that:

1. The purchasing agent may delegate to using departments responsibility for the preparation and maintenance of specifications generally or for specific supplies, services, or construction, subject to approval of any such specifications by the purchasing agent; and

2. If the purchasing agent does not approve a specification, the city manager may, at his discretion, upon the request of the using agency, modify or reverse such decision of the purchasing agent. Any determination modifying or reversing the specifications shall be in writing.

B. Maximum Practicable Competition. All specifications shall seek to promote overall economy for the intended purpose and shall be drafted so as to assure the maximum practicable competition for the city's actual requirements.

C. Specifications Prepared by Architects and Engineers. The requirements of this section regarding the purposes and nonrestrictiveness of specifications shall apply to all specifications, including, but not limited to, those prepared by architects, engineers, designers, and draftsmen for public contracts. (Ord. 4051(part), 1980).

2.92.195 Contractual remedies. A. Authority to Resolve Protested Solicitations and Awards.

1. Right to Protest. Any actual or prospective bidder, offeror, or contractor who is aggrieved in connection with the solicitation or award of a contract may protest to the purchasing agent. The protest shall be submitted in writing within fourteen days after such aggrieved person knows or should have known of the facts giving rise thereto.

2. Authority to Resolve Protests. The purchasing agent shall have the authority, prior to the commencement of an action in court concerning the controversy, to settle and resolve a protest of an aggrieved bidder, offeror, or contractor, actual or prospective, concerning the solicitation or award of a contract.

3. Decision. If the protest is not resolved by mutual agreement, the purchasing agent shall promptly issue a decision in writing. The decision shall:

a. State the reasons for the action taken; and

b. Inform the protestant of its right to judicial review as provided in this chapter.

4. Notice of Decision. A copy of the decision under this section shall be mailed or otherwise furnished immediately to the protestant and any other party intervening.

5. Finality of Decision. A decision under this section shall be final and conclusive unless fraudulent, or unless any person adversely affected by the decision commences an action in court.

6. Stay of Procurements During Protests. In the event of a timely protest under this section, the city shall not proceed further with the solicitation or with the award of the contract until the purchasing agent, after consultation with the head of the using agency and the city manager, makes a written determination that the award of the contract without delay is necessary to protect substantial interests of the city.

B. Authority to Debar or Suspend.

1. Authority. After reasonable notice to the person involved and reasonable opportunity for that person to be heard, the purchasing agent, after consultation with the using agency and the city attorney, shall have authority to debar a person for cause from consideration for award of contracts. The debarment shall not be for a period of more than three years. The same officer, after consultation with the using agency and the city attorney, shall have authority to suspend a person

from consideration for award of contracts if there is probable cause for debarment. The suspension shall not be for a period exceeding three months.

2. Causes for Debarment or Suspension. The causes for debarment or suspension include the following:

a. Conviction for commission of a criminal offense as an incident to obtaining or attempting to obtain a public or private contract or subcontract, or in the performance of such contract or subcontract;

b. Conviction under state or federal statutes of embezzlement, theft, forgery, bribery, falsification or destruction of records, receiving stolen property, or any other offense indicating a lack of business integrity or business honesty which currently, seriously, and directly affects responsibility as a city contractor;

c. Conviction under state or federal antitrust statutes arising out of the submission of bids or proposals;

d. Violation of contract provisions, as set forth below, of a character which is regarded by the purchasing agent to be so serious as to justify debarment action:

(i) Deliberate failure without good cause to perform in accordance with the specifications or within the time limit provided in the contract, or

(ii) A recent record of failure to perform or of unsatisfactory performance in accordance with the terms of one or more contracts; provided, that failure to perform or unsatisfactory performance caused by acts beyond the control of the contractor shall not be considered to be a basis for debarment;

e. Any other cause the purchasing agent determines to be so serious and compelling as to affect responsibility as a city contractor, including debarment by another governmental entity for any of the causes listed in this chapter; and

f. For violation of the ethical standards set forth in this chapter.

3. Decision. The purchasing agent shall issue a written decision to debar or suspend. The decision shall:

a. State the reasons for the action taken; and

b. Inform the debarred or suspended person involved of its rights to judicial review as provided in this chapter.

4. Notice of Decision. A copy of the decision under this section shall be mailed or otherwise furnished immediately to the debarred or suspended person and any other party intervening.

5. Finality of Decision. A decision under this section shall be final and conclusive, unless fraudulent, or unless the debarred or suspended person commences an action in court.

C. Authority to Resolve contract and Breach of Contract Controversies.

1. Applicability. This section applies to controversies between the city and a contractor and which arise under, or by virtue of, a contract between them. This includes without limitation controversies based upon breach of contract, mistake, misrepresentation, or other cause for contract modification or rescission.

2. Authority. The purchasing agent is authorized, prior to commencement of an action in a court concerning the controversy, to settle and resolve a controversy described in this section.

3. Decision. If such a controversy is not resolved by mutual agreement, the purchasing agent shall promptly issue a decision in writing. The decision shall:

a. State the reasons for the action taken; and

b. Inform the contractor of its right to judicial review as provided in this chapter.

4. Notice of Decision. A copy of the decision under this section shall be mailed or otherwise furnished immediately to the contractor.

5. Finality of Decision. The decision under this section shall be final and conclusive, unless fraudulent, or unless the contractor commences an action in court.

6. Failure to Render Timely Decision. If the purchasing agent does not issue the written decision required under this section within one hundred twenty days after written request for a final decision, or within such longer period as may be agreed upon by the parties, then the contractor may proceed as if an adverse decision had been received.

D. Time Limitations on Actions.

1. Protested Solicitations and Awards. Any legal action under this chapter shall be initiated within thirty days after the aggrieved person knows or should have known of the facts giving rise to the action.

2. Debarments and Suspensions for Cause. Any action challenging a suspension or debarment shall be commenced within six months after receipt of the decision of the purchasing agent under this chapter.

3. Actions Under Contracts or for Breach of Contract. The statutory limitations on an action between private persons on a contract or for a breach of contract shall apply to any action commenced pursuant to this chapter. (Ord. 4051(part), 1980).

2.92.200 Supply management. The purchasing agent may promulgate operational procedures governing:

A. The management of supplies during their entire life cycle;

B. The sale, lease or disposal of supplies by public auction, competitive sealed bidding, or other appropriate methods excepting purchases of an interest in real property. However, no employee of the city shall be entitled to purchase any such supplies, except by public auction or competitive sealed bidding; and

C. Transfer of excess supplies within the city. For the purpose of this section, surplus supplies does not include real property. (Ord. 4051(part), 1980).

2.92.210 Prevailing wage on building or work financed in whole or in part with city financial assistance was repealed in its entirety by council action on March 10, 2015 by Ordinance # 7130.

2.92.215 Regulation of public work was repealed in its entirety by council action on March 10, 2015 by Ordinance # 7130.

2.92.220 Ethics in public contracting. A. Standards of Conduct--Statement of Policy. Public employment is a public trust. It is the policy of the city to promote and balance the objective of protecting government integrity and the objective of facilitating the recruitment and retention of personnel needed by the city. Such policy is implemented by prescribing essential restrictions against conflict of interest without creating unnecessary obstacles to entering public service.

Public employees must discharge their duties impartially so as to assure fair competitive access to governmental procurement by responsible contractors. Moreover, they should conduct themselves in such a manner as to foster public confidence in the integrity of the city procurement organization.

To achieve the purpose of this section, it is essential that those doing business with the city also observe the ethical standards prescribed herein.

B. General Standards of Ethical Conduct for Employees. Any attempt to realize personal gain through public employment by conduct inconsistent with the proper discharge of the employee's duties is a breach of a public trust. In order to fulfill this general prescribed standard, employees shall meet the specific standards set forth in this section and Sections 2.92.230, 2.92.240, 2.92.260, and 2.92.270.

C. General Standards of Ethical Conduct for Nonemployees. Any effort to influence any public employee to breach the standards of ethical conduct set forth in this chapter is also a breach of ethical standards.

D. Conflict of Interest. It shall be a breach of ethical standards, and a conflict of interest, for any employee to participate directly or indirectly in a procurement when the employee knows that:

1. The employee or any member of the employee's immediate family has a financial interest pertaining to the procurement; or

2. A business or organization in which the employee or any member of the employee's immediate family has a financial interest pertaining to the procurement; or

3. Any other person, business, or organization with whom the employee or any member of the employee's immediate family is negotiating or has an arrangement concerning prospective employment is involved in the procurement.

E. Financial Interest in a Blind Trust. Where an employee or any member of the employee's immediate family holds a financial interest in a blind trust, the employee shall not be deemed to have a conflict of interest with regard to matters pertaining to that financial interest, provided that disclosure of the existence of the blind trust has been made to the purchasing agent.

F. Discovery of Conflict of Interest, Disqualification, and Waiver. Upon discovery of potential or actual conflict of interest, an employee shall promptly file a written statement of disqualification with the purchasing agent and shall withdraw from further participation in the transaction involved. (Ord. 4051(part), 1980).

2.92.230 Employee disclosure requirements. A. Disclosure of Benefit Received from Contract. Any employee who has or obtains any benefit from any city contract, in which the employee participates directly or indirectly, with a business in which the employee has a financial interest, shall report such benefit to the purchasing agent. Any employee who knows or should have known of such benefit, and fails to promptly report such benefit to the purchasing agent, is in breach of the ethical standards of this chapter. (Ord. 4051(part), 1980).

2.92.240 Gratuities and kickbacks. A. Gratuities. It is a breach of ethical standards for any person to offer, give, or agree to give any employee or former employee, or for any employee or former employee to solicit, demand, accept, or agree to accept from another person, a gratuity or an offer of employment in connection with any decision, approval, disapproval, recommendation, preparation of any part of a purchase request, influencing the content of any specification of procurement standard, rendering of advice, investigation, auditing, or in any other advisory capacity in any proceeding or application, request for ruling, determination, claim or controversy, or other particular matter, pertaining to any contract or subcontract and any solicitation or proposal therefor. This section is intended to supplement, and not limit, the provisions of Section 2.72.130.

B. Kickbacks. It is a breach of ethical standards for any payment, gratuity, or offer of employment to be made by or on behalf of a subcontractor under a contract to the prime contractor or higher tier subcontractor or any person associated therewith, as an inducement for the award of a subcontract or order. (Ord. 4051(part), 1980).

2.92.250 Restrictions on employment of present and former employees. A. Contemporaneous Employment Prohibited. It shall be a breach of ethical standards for any employee who is participating directly or indirectly in the procurement process to be or become, while such an employee, employed by any person contracting with the governmental body.

B. Restrictions on Former Employees.

1. Permanent Disqualification. It shall be a breach of ethical standards for any former employee knowingly to act as a principal or agent for anyone other than the city, in connection with any:

a. Judicial or other proceeding, application, request for a ruling, or other determination;

b. Contract;

c. Claim; or

d. Charge or controversy; in which the employee participated personally and substantially through decision, approval disapproval, recommendation, rendering of advice, investigation, or otherwise while an employee, where the city is a party or has a direct and substantial interest.

2. One-year Restriction. It shall be a breach of ethical standards for any former employee, within one year after cessation of the former employee's official responsibility, knowingly to act as a principal, or as an agent for anyone other than the city, in connection with any:

a. Judicial or other proceeding, application, request for ruling, or other determination;

b. Contract;

c. Claim; or

d. Charge or controversy; in matters which were within the former employee's official responsibility, where the city is a party or has a direct or substantial interest.

C. Disqualification of Business. It shall be a breach of ethical standards for a business in which an employee has a financial interest knowingly to act as a principal, or as an agent for anyone other than the city, in connection with any:

1. Judicial or other proceeding, application, request for ruling, or other determination;
2. Contract;
3. Claim; or
4. Charge or controversy; in which the employee either participates personally and substantially through decision, approval, disapproval, recommendation, the rendering of advice, investigation, or otherwise, or which is the subject of the employee's official responsibility, where the city is a party or has a direct and substantial interest.

D. Selling to the City.

1. The term "sell", as used in this subsection, means signing a bid, proposal, or contract; negotiating a contract; contacting any employee for the purpose of obtaining, negotiating, or discussing changes in specifications, price, cost allowances, or other terms of a contract; settling disputes concerning performance of a contract; or any other liaison activity with a view toward the ultimate consummation of a sale, including those cases where the actual contract therefor is subsequently negotiated by another person; provided, however, that this subsection is not intended to preclude a former employee from accepting employment with a private business solely because the former employee's employer is a contractor with this city, nor shall a former employee be precluded from serving as a consultant to this city.

2. It shall be a breach of ethical standards for any former employee to sell or attempt to sell supplies, services, or construction to the city for one year following the date employment ceased. (Ord. 4051(part), 1980).

2.92.260 Prohibition against contingent fees. It shall be a breach of ethical standards to retain a person, or for a person to be retained, to solicit or secure a city contract upon an agreement or understanding for a commission, percentage, brokerage, or contingent fee, except for retention of bona fide employees or bona fide established commercial selling agencies maintained by the contractor for the purpose of securing business. (Ord. 4051(part), 1980).

2.92.270 Use of confidential information. It shall be a breach of ethical standards for any employee or former employee knowingly to use confidential information for actual or anticipated personal gain, or for the actual or anticipated personal gain of any other person. (Ord. 4051(part), 1980).

2.92.280 Public access to procurement information. Procurement information shall be a public record to the extent provided by state and federal law and shall be available to the public as provided by such laws. (Ord. 4051 (part), 1980).

2.92.290 Civil and administrative remedies. A. Existing Remedies not Impaired. Civil and administrative remedies against employees which are in existence on the effective date of this chapter shall not be impaired.

B. Supplemental Remedies. In addition to existing remedies for breach of ethical standards of this chapter, the city manager may impose any one or more of the following, not necessarily in the order as listed:

1. Oral or written warnings or reprimands;
2. Suspension with or without pay for specified periods of time; and
3. Termination of employment.

C. Recovery from Employee. The value of anything received by an employee in breach of the ethical standards of this chapter or regulations promulgated thereunder shall be recoverable by the city as provided in Section 2.92.310.

D. Due Process. All procedures under this section shall be in accordance with due process requirements and existing state law. (Ord. 4051 (part), 1980).

2.92.300 Civil and administrative remedies against nonemployees. A. Existing Remedies not Impaired. Civil administrative remedies against nonemployees which are in existence on the effective date of this chapter shall not be impaired.

B. Supplemental Remedies. In addition to existing remedies for breach of the ethical standards of this section, the city manager may impose any one or more of the following:

1. Oral or written warnings or reprimands;
2. Termination of a transaction; and
3. Suspension or debarment.

C. Recovery from Nonemployee. The value of anything transferred in breach of the ethical standards of this chapter or regulations promulgated thereunder by a nonemployee shall be recoverable by the city from such person as provided in Section 2.92.310.

D. Right of City to Suspend or Debar.

1. Suspension of a contractor may be imposed during an investigation of charges of a serious and compelling nature based on probable cause indicating the existence of a breach of ethical standards under this chapter or other irregularities of a serious and compelling nature which would affect the integrity of the contractor.

2. Debarment of a contractor may be imposed by reason of a finding of any breach of ethical standards under this chapter or for a finding or other irregularities of a serious and compelling nature affecting the integrity of the contractor.

E. Due Process. All procedures under this section shall be in accordance with due process requirements. (Ord. 4051(part), 1980).

2.92.310 Recovery of value transferred or received.

A. General Provisions. The value of anything transferred or received in breach of the ethical standards of this section by an employee or a nonemployee may be recovered from both the employee and the nonemployee.

B. Recovery of Kickbacks by the City. Upon a showing that a subcontractor made a kickback to a prime contractor or a higher tier subcontractor in connection with the award of a subcontract or order thereunder, it shall be conclusively presumed that the amount thereof was included in the price of the subcontract or order and ultimately borne by the city and will be recoverable hereunder from the recipient. In addition, said value may also be recovered from the subcontractor making such kickbacks. Recovery from one offending party shall not preclude recovery from other offending parties. (Ord. 4051(part), 1980).

2.92.320 Waiver. On written request of an employee, the city manager may grant an employee or former employee a written waiver from the application of Sections 2.92.220 D or 2.92.250 and grant permission to proceed with the transaction to such extent and upon such terms and conditions as may be specified. Such waiver and permission may be granted when interests of the city so require, or when the ethical conflict is insubstantial or remote. (Ord. 4051(part), 1980).

Title 3

REVENUE AND FINANCE

Chapters:

3.08 Funds
3.12 Tax Rolls
3.16 Special Assessments
3.20 Room Tax
3.30 Economic Development Fund

Chapter 3.08

FUNDS

Sections:

3.08.010 Cemetery fund--Created.
3.08.020 Cemetery fund--Delinquent assessments.

3.08.010 Cemetery fund--Created. A. The council of the city has determined to establish a cemetery fund pursuant to the provisions of Sections 959-82 to 959-84 of the Wisconsin Statutes for 1913.

B. All sums of money donated shall, unless otherwise directed by the donor, be paid into the treasury of the city. The city treasurer shall give a receipt therefor, which shall be recorded in some appropriate book to be kept for that purpose. In the book shall be stated the amount received from each donor, and the specific purpose to which the use thereof is appropriated. Money so received by the city treasurer, unless otherwise directed by the donor, shall be paid into the general fund of the city, and the city shall thereafter be perpetually liable for four percent thereon annually, or if the city can at any time borrow the same amount of money for a rate of interest less than four percent then for such less rate of interest, annually to be expended, for the purpose and in the manner designated by the donor by and under the direction of the city authorities, and through such agencies as they may from time to time select. (Prior code §13.27).

3.08.020 Cemetery fund--Delinquent assessments. The provisions of Section 157.11 (7)(d) of the Wisconsin Statutes, prescribing the procedure in case of delinquent assessments for annual care, are adopted by reference as fully as if set out verbatim. (Prior code §13.28).

Chapter 3.12

TAX ROLLS

Sections:

3.12.010 Computation--Payment receipts.
3.12.020 Taxes--Payment.
3.12.030 Taxes—Direct Distribution of Tax Credits.

3.12.010 Computation--Payment receipts. A. Pursuant to Section 70.65 (2) of the Wisconsin Statutes the city clerk shall, in computing the tax roll, insert only the aggregate amount of state, county and local taxes in a single column in the tax roll opposite the parcel of land against which the tax is levied, or, in case of personal property, in a single column opposite the name of the person, firm or corporation against whom the tax is levied.

B. Pursuant to Section 74.08(1), in lieu of entering on each tax receipt the several amounts paid respectively for state, county, local, school and other taxes, the aggregate amount of state, county, local, school and other taxes shall be combined in a single column on the tax receipt issued by the city treasurer. The city treasurer shall cause to be printed or stamped on the tax receipts the separate proportion or rate of taxes levied for state, county, local, school and other purposes. (Prior code §23.01).

3.12.020 Taxes--Payment. Pursuant to Section 62.01 of Wisconsin Statutes, the time for paying taxes in the city, as fixed by Chapter VIII of the Revised Charter of the city is changed to conform to general law. (Prior code §23.02).

3.12.030 Taxes—Direct Distribution of Tax Credits. Pursuant to Wisconsin States, and as amended from time to time, the City elects to receive direct distribution of property ta credits to the maximum extent allowable by law. (Ord. 7274, §1, 2018)

Chapter 3.16

SPECIAL ASSESSMENTS

Sections:

3.16.010 Policy--Adopted.
3.16.020 Payments-- Installments.
3.16.030 Special assessments--City assumption.

3.16.010 Policy--Adopted. A. That the special assessment policy for the city adopted by the city council on September 28, 1955, Ord. No. 2549, and as subsequently amended on November 8, 2016, Ord. No. 7207, is hereby modified, amended and replaced with the special assessment policy dated February 12, 2019, be and the same is adopted by reference as fully as if herein set forth verbatim.

B. Said policy, entitled "Special Assessment Policy of the City of Eau Claire" shall be on file in the office of the city clerk, and a certified copy thereof shall be on file in the office of the city engineer and the same shall be open to public inspection during usual business hours. (Ord. 7319, 2019; Ord. 7207, §1, 2016; Ord. 6520, 2004; Ord. 6261, 2002; Ord. 5930, 1999; Ord. 5915, 1999; Ord. 5795, 1998; Ord. 5480, 1995; Prior code §23.22).

3.16.020 Payments--Installments. A. Special assessments that are placed on the tax roll may be paid in installments on the same date and in the same percentages as installment payments of real property taxes. If the total special assessment is less than $100, it shall not be paid in installments but shall be paid in full on or before January 31.

B. Upon conveyance, by deed, of any property subject to a special assessment which is authorized to be paid in installments and which has been placed on the tax roll, the entire amount of the special assessment then outstanding shall be immediately due and payable and shall not be assumed by the purchaser of the property. In the event of nonpayment, the entire outstanding special assessment balance shall be placed on the next ensuing tax roll and collected in the same manner as taxes upon real estate. Following such a conveyance, the city treasurer shall make appropriate modifications to the city's special assessment roll and records to reflect such change. The entire balance of special assessments must be paid when property subject to a special assessment is divided by re-platting, in a certified survey map or any portion of the land subject to a special assessment is deeded by a separate legal description.

C. Subsection B. shall not apply to any conveyance:

1. Which, executed for nominal, inadequate or no consideration, confirms, corrects or reforms a conveyance previously recorded.

2. Pursuant to mergers of corporations.

3. By a subsidiary corporation to its parent for no consideration, nominal consideration or in sole consideration of cancellation, surrender or transfer of capital stock between parent and subsidiary corporations.

4. Between husband and wife, parent and child, step parent and step child, parent and son-in-law or parent and daughter-in-law for nominal or no consideration.

5. Between agent and principal or from a trustee to a beneficiary without actual consideration.

6. Solely in order to provide or release security for a debt or obligation except as required by Wis. Stats. 77.22(2)(b).

7. By will, descent or survivorship.

8. Pursuant to or in lieu of condemnation.

9. Under a foreclosure or a deed in lieu of a foreclosure to a person holding a mortgage or to a seller under a land contract.

10. Between a corporation or partnership and its shareholders or partners if all of the stock is owned by, or all the partners are, spouses or lineal ascendants or descendants of each other, if the transfer is for no consideration except stock of the corporation or an interest in the partnership

and if, in the case of transfers from corporations, the corporation owned the property for at least three years.

11. To a trust if a transfer from the grantor to the beneficiary of the trust would be exempt from this section.

12. Between a limited liability company and its shareholders if all of the stock is owned by, or all the partners are, spouses or lineal ascendants or descendants of each other, if the transfer is for no consideration except stock of the corporation or an interest in the partnership and if, in the case of transfers from limited liability companies the limited liability company owned the property for at least three years.

D. Subsection B shall apply only to conveyances which are recorded after July 1, 1984.

E. Effective January 1, 1998, installment payments of special assessments for the reconstruction of water and sewer utilities completed in 1989 and following years are waived and forgiven as to those payments having due dates after July 31, 1998. Special assessments levied and assumed by the City on behalf of indigent persons pursuant to the provisions of Section 3.16.030 shall be waived and forgiven in the same manner and the same proration as other special assessments as specified in this subsection. In this section, “reconstruction” means the building or installation of a sewer or water utility main or lateral, or both, which replaces a previously existing main or lateral with substantially the same service within the same right of way or easement of the city. This ordinance shall supersede all other ordinances or resolutions enacted by the Eau Claire city council which are in conflict with this ordinance. (Ord. 7037, 2012; Ord. 5851, 1998; Ord. 5791, 1998; Ord. 5415, 1994; 5390, 1994; Ord. 4794 §1, 2, 3, 1987; Ord. 4472, 1984; Ord. 4442, 1984; Ord. 3398 §II(part), 1973).

3.16.030 Special assessments--City assumption. A. Purpose. The city council acknowledges that the levy of special assessments can result in extreme financial hardship in some instances. It therefore enacts this provision in order to provide necessary relief to persons affected by such a levy. It is the intent and purpose of the city council to alleviate the burden of such levies in cases where the loss of the homestead is a reasonable probability, while preserving the right for the ultimate collection of special assessments involved.

B. Definitions. Wherever in this section the following words or terms appear they have the meaning indicated, unless the context clearly requires otherwise:

1. "Indigent person" means a natural person owning and occupying a homestead against which special assessments are levied in an amount which, when considered with the overall financial condition of the person, will, within a reasonable probability, require the sale of the homestead to satisfy the payment of such special assessments.

2. "Homestead" means the dwelling and so much of the land surrounding it as is reasonably necessary for use as a home, except so much of such land as is vacant and of sufficient size so that it could be divided and sold for development as permitted under appropriate zoning and other regulations.

3. "Special assessment" shall include assessments levied under s. 66.0701, Wisconsin Statutes, including any amendments, revisions or modifications of same and special charges imposed under s. 66.0627, Wisconsin Statutes including any amendments, revisions or modifications of same.

C. Assumption by city. The city council may determine, following due application and consideration by the committee, to assume and pay on behalf of any indigent person, all or part of any special assessment, or installment thereof. Upon the granting of an application, the payment of all or part of such special assessment shall be deemed to be deferred, in accordance with and subject to the terms and conditions as set forth by the city council and this section.

D. Application. Applications for a deferment under this section shall be filed with the city clerk on forms provided by the city. The information on the form shall be verified by the applicant. The application shall contain the following information:

1. Age and employment of applicant;
2. Schedule of applicant's assets, liabilities and income from all sources; and
3. All other information requested by the city to assist in evaluating the application.

All information provided on the application shall be considered and treated, to the fullest extent provided by law, as confidential, privileged information, and shall be divulged only by:

a. Persons using the information in the discharge of their duties imposed by law or of the duties of their office; or

b. Order of a court.

E. Review of application. City council shall make the final determination as to the granting of an application for deferment of a special assessment.

F. Interest. Interest on the amount of special assessment deferred shall be imposed at the rate of 6% per year.

G. Tax roll; notice; lien retained. The granting of an application shall authorize the city treasurer to make payment, from city funds, of the amount of the special assessment deferred. The city clerk shall record a document with the office of register of deeds containing a description of the property affected, the amount of special assessment deferred, and any other appropriate information. Such amount, and interest thereon, shall not be placed on the tax roll until the conditions contained in subsection H. occur. Nothing provided in this section shall be deemed to extinguish or otherwise affect any lien established by law for the collection of any deferred special assessment, and any such lien is expressly retained.

H. Placement on roll. When a determination is made by the city council that a grantee no longer qualifies as an indigent person, the amount of special assessments deferred, and accrued interest, shall be placed upon the next available tax roll to be collected in the same manner as delinquent special assessments.

I. Payment when no longer eligible. Upon transfer of title of such property by any means, the amount of special assessments deferred, and accrued interest, shall become due and payable in full. Upon payment in full, an appropriate satisfaction of payment shall be issued by the city treasurer and recorded in the office of register of deeds.

J. Payment to discharge lien. The owner of property affected, or the heirs, personal representative or assigns of such owner, may discharge the lien of such special assessment at any time by paying the outstanding amount of special assessment owing, plus accrued interest.

K. Grant not a waiver.

1. The granting of an application by the city council under this section shall not be deemed to be a waiver of the requirement that, in the event of an appeal of a special assessment under s. 66.0703(12), Wisconsin Statutes, including any amendments, revisions or modifications of same the amount of the assessment shall be paid in full as a condition to the maintenance of said appeal, as provided by s. 66.0703(12), Wisconsin Statutes including any amendments, revisions or modifications of same.

2. The granting of an application under this section shall not be deemed to waive the right of the city to reassess any invalid special assessment under the provisions of s. 66.0703(14), Wisconsin Statutes including any amendments, revisions or modifications of same.

3. The applicant shall agree to the conditions contained in paragraphs 1. and 2. prior to granting the application. (Ord. 7207 §2, 2016; Ord. 7193 §3, 2016; Charter Ord. 6935, 2010; Ord. 5439, 1994; Ord. 5108 §1, 1990).

Chapter 3.20

ROOM TAX

Sections:

3.20.010 Definitions.
3.20.020 Levy of tax--Rate.
3.20.025 Allocation of tax collected.
3.20.030 Administration--Returns.
3.20.040 Permit--Application--Fee.
3.20.050 Permit--Issuance--Display.
3.20.060 Permit--Revocation or suspension.
3.20.070 Successor's liability.
3.20.080 Office audit determination.

3.20.090 Field audit determination.
3.20.100 Failure to file return--Estimate and penalty.
3.20.110 Interest rate.
3.20.120 Delinquent returns--Fee.
3.20.135 Interest--Penalty--Late fee; Waiver.
3.20.140 Security deposit.
3.20.150 Record keeping.
3.20.160 Confidentiality--Who may have access to information.
3.20.170 Confidentiality--Responsibility of administrators.
3.20.180 Violation--Penalty.

3.20.010 Definitions. In this chapter: A. "Hotel" or "motel" has the meaning as defined in Wisconsin Statutes, Section 77.52(2)(a)1.

B. “Marketplace provider” has the meaning as defined in Wisconsin Statutes, Section 66.0615(1)(bt).

C. “Marketplace seller” has the meaning as defined in Wisconsin Statutes, Section 77.51 (7j).

D. “Residential dwelling” has the meaning as defined in Wisconsin Statutes, Section 66.0615(1)(di).

E. “Short−term rental” has the meaning as defined in Wisconsin Statutes, Section 66.0615(1)(dk).

F. "Transient" has the meaning as defined in Wisconsin Statutes, Section 77.52(2)(a)1. (Ord. 7466 §1, 2022; Ord. 4827 §1, 1987; Ord. 3513 §1(A), 1975).

3.20.020 Levy of tax--Rate. Pursuant to Wisconsin Statutes, Section 66.0615, a tax is imposed on the sales price from selling or furnishing, at retail, except sales for resale, of rooms or lodging to transients by hotel keepers, motel operators, marketplace providers, owners of short-term rentals, and other persons or retailers selling or furnishing accommodations that are available to the public, irrespective of whether membership is required for the use of the accommodations. Such tax shall be at a rate of 8% of the sales price from such retail selling or furnishing of rooms or lodgings. Such tax shall not be subject to the selective sales tax imposed by Wisconsin Statutes, Section 77.52(2)(a). (Ord. 7466 §2, 2022; Ord. 6857 §1, 2008; Ord. 4614, 1985; Ord. 3974 §2, 1979; Ord. 3513 §1(B), 1975).

3.20.025 Allocation of tax collected . A. The City elects to retain at least 30% of the amount collected, up to the maximum amount permitted by law for a city having first imposed a room tax prior to May 13, 1994, and as otherwise consistent with any then current contracts with a tourism entity, on other expenses that further a public purpose as determined annually by the city council through the City adopted budget. (Ord. 7466 §3, 2022; Ord. 7149 §1, 2015)

3.20.030 Administration--Returns. This chapter shall be administered by the city treasurer. The tax imposed for each calendar month is due and payable on the thirtieth day of the month next succeeding the calendar month for which imposed. A return shall be filed with the city treasurer by those selling or furnishing at retail such rooms and lodging, on or before the same date on which such tax is due and payable. Such return shall show the sales receipts of the preceding month from such retail furnishing of rooms or lodging, the amount of taxes imposed for such period, and such other information as the city treasurer deems necessary. (Ord. 7466 §4, 2022; Ord. 3534 §1, 1975; Ord. 3513 §1(c), 1975).

3.20.040 Permit--Application--Fee. Every person selling or furnishing rooms or lodging under Section 3.20.020 shall file with the city treasurer an application for a permit for each place of business. Every application for a permit shall be made upon a form prescribed by the city treasurer and shall set forth the name under which the applicant transacts or intends to transact business, the location of his place of business, and such other information as the city treasurer requires. The application shall be signed by the owner if a sole proprietor and, if not a sole proprietor, by the person authorized to act on behalf of such sellers. At the time of making an application the applicant shall pay

to the city treasurer a fee as stated in the City of Eau Claire Fees and Licenses Schedule for each permit. (Ord. 7466 §5, 2022; Ord. 6363 §4, 2002; Ord. 3513 §1(D), 1975).

3.20.050 Permit--Issuance--Display. After compliance with Sections 3.20.040 and 3.20.140 by the applicant, the city treasurer shall grant and issue to each applicant a separate permit for each place of business within the city. Such permit is not assignable and is valid only for the person in whose name it is issued and for the transaction of business at the place designated therein. It shall at all times be conspicuously displayed at the place for which issued. (Ord. 3513 §1(E), 1975).

3.20.060 Permit--Revocation or suspension. Whenever any person fails to comply with this chapter the city treasurer may, upon ten days' notification and after affording such person the opportunity to show cause why his permit should not be revoked, revoke or suspend any or all of the permits held by such person. The city treasurer shall give to such person written notice of the suspension or revocation of any of his permits. The city treasurer shall not issue a new permit after the revocation of a permit unless he is satisfied that the former holder of the permit will comply with the provisions of this chapter. A fee as stated in the City of Eau Claire Fees and Licenses Schedule shall be imposed for the renewal or issuance of a permit which has been previously suspended or revoked. (Ord. 6363 §4, 2002; Ord. 3513 §1(F), 1975).

3.20.070 Successor's liability. A. If any person liable for any amount of room tax under this chapter sells out his or her business or quits the business, his or her successors or assigns shall withhold a sufficient amount of the purchase price to cover such tax amount until the city treasurer issues a receipt that the tax has been paid or a certificate stating that no amount is due.

B. A purchaser or assignee of the business of any person liable for room tax shall be personally liable for payment of such room tax if the purchaser or assignee fails to withhold a sufficient amount of the purchase price to cover the taxes due. Such liability shall be known as "successor's liability" under this section.

1. If a corporation is created and acquires the assets of a sole proprietor in consideration for the corporation's capital stock, the corporation is liable for the room tax of the sole proprietorship.

2. A financial institution or mortgagee who forecloses on a loan to a person owing delinquent room tax shall not incur successor's liability.

3. If a business passes from one party to a second party and thereafter to a third party, and the second party's successor's liability shall be unpaid, such successor's liability shall not be transferred to the third party. Under such circumstances, such third party shall be liable only for the unpaid room tax of the second party.

4. Successor's liability is not incurred through a sale by a trustee in bankruptcy, through a transfer by gift or inheritance, through a sheriff's sale, or through a sale by a personal representative or special administrator.

5. If a financial institution or other creditor actually operates a business which has been voluntarily surrendered by a delinquent debtor in full or partial liquidation of a debt, the creditor shall incur successor's liability. The financial institution or creditor does not incur successor's liability if it acquires possession of a business voluntarily surrendered if it never operates the business and if its sole purpose is to sell the business in its entirety at whatever price it can obtain to recover its investment.

6. A successor shall be liable only for the amount of the room tax liability, and not penalties or interest.

7. Successor's liability shall be limited to amounts owed by the predecessor which were incurred at the location purchased. If the seller operates at more than one location while incurring a total liability for all locations, its liability incurred at the location sold shall be determined and shall represent the amount for which the successor may be held liable.

8. Successor's liability shall be determined by law and shall not be altered by agreements between a buyer and seller. (Ord. 5106, 1990; Ord. 3513 §1(G), 1975).

3.20.080 Office audit determination. The city treasurer may, by office audit, determine the tax required to be paid to the city or the refund due any person under this chapter. This determination

may be made upon the basis of the facts contained in the return being audited or on the basis of any other information within the city treasurer's possession. One or more such office audit determinations may be made of the amount due for anyone or for more than one period. (Ord. 3513 §1(H), 1975).

3.20.090 Field audit determination. The city treasurer may, by field audit, determine the tax required to be paid to the city or the refund due to any person under this chapter. The determination may be made upon the basis of the facts contained in the return being audited or upon any other information within the city treasurer's possession. The city treasurer is authorized to examine and inspect the books, records, memoranda, and property of any person in order to verify the tax liability of that person or of another person. Nothing herein shall prevent the city treasurer from making a determination of tax at any time. (Ord. 3513 §1(I), 1975).

3.20.100 Failure to file return--Estimate and penalty. The City treasurer may impose penalties as specified in Wisconsin Statutes Section 66.0615(2) for non-payment and failure to file a return. (Ord. 7466 §6, 2022; Ord. 3513 §1(J), 1975).

3.20.110 Interest rate. All refunded taxes shall bear interest at six percent per year from the due date of the return until the first day of the month following the month in which said taxes are refunded. An extension of time within which to file a return shall not operate to extend the date due of the return for purposes of interest computation. If the city treasurer determines that any overpayment of tax has been made intentionally or by reason of carelessness or neglect, or if the tax which was overpaid was not accompanied by a complete return, it shall not allow any interest thereon. (Ord. 7466 §7, 2022; Ord. 3513 §1(K), 1975).

3.20.120 Delinquent returns--Fee. Delinquent tax returns shall be subject to late filing fee as stated in the City of Eau Claire Fees and Licenses Schedule and any penalties due pursuant to section 3.20.100 of this code of ordinances. The tax imposed by this chapter shall become delinquent if not paid:

A. In the case of a timely filed return, within thirty days after the due date of the return, or within thirty days after the expiration of an extension period if one has been granted;

B. In the case of no return filed or a return filed late, by the due date of the return.

(Ord. 7466 §8, 2022; Ord. 6363 §4, 2002; Ord. 3513 §1(L), 1975).

3.20.135 Interest--Penalty--Late fee; Waiver. A. A. Any penalty imposed pursuant to ss. 3.20.100, and the late fee imposed pursuant to s. 3.20.120 may be waived by the city treasurer if the treasurer determines that the error or failure for which the penalty or late fee would otherwise be imposed was reasonably due to good cause and not due to neglect.

B. The interest on unpaid room taxes which is imposed pursuant to s. 3.20.110 may be waived by the city treasurer if the treasurer determines that the non-payment was reasonably due to good cause and not due to neglect. (Ord. 7466 §10, 2022; Ord. 5211 §2, 1992).

3.20.140 Security deposit. In order to protect the revenue of the city, the city treasurer may require any person liable for the tax imposed by this chapter to place with the city, before or after a permit is issued, such security not in excess of five thousand dollars as the city treasurer determines. If any taxpayer fails or refuses to place such security, the city treasurer may refuse or revoke such permit. If any taxpayer is delinquent in the payment of the taxes imposed by this chapter, the city treasurer may, upon ten days' notice, recover the taxes, interest and penalties from the security placed with the city treasurer by such taxpayer. No interest shall be paid or allowed by the city to any person for the deposit of such security. (Ord. 3513 §1(N), 1975).

3.20.150 Record keeping. Every person liable for the tax imposed by this chapter shall keep or cause to be kept such records, receipts, invoices and other pertinent papers in such form as the city treasurer requires. (Ord. 3513 §1(O), 1975).

3.20.160 Confidentiality--Who may have access to information. All tax returns, schedules, exhibits, writings or audit reports relating to such returns, on file with the city treasurer, are

deemed to be confidential, except the city treasurer may divulge their contents to the following, and no others:

A. The person who filed the return;

B. Persons using the information in the discharge of duties imposed by law or of the duties of their office; and

C. By order of a court.

(Ord. 5101, 1990; Ord. 4827 §2, 1988; Ord. 3513 §1(P), 1975).

3.20.170 Confidentiality--Responsibility of administrators. No person having an administrative duty under this chapter shall make known in any manner the business affairs, operations or information obtained by an investigation of records of any person on whom a tax is imposed by this chapter, or the amount or source of income, profits, losses, expenditures, or any particular thereof, set forth or disclosed in any return or to permit any return or copy thereof to be seen or examined by any person, except as provided in Section 3.20.160. (Ord. 3513 §1(Q), 1975).

3.20.180 Violation--Penalty. Any person who is subject to the tax imposed by this chapter who fails to obtain a permit as required in Section 3.20.040, or who fails or refuses to permit the inspection of his records by the city treasurer after such inspection has been duly requested by the city treasurer, or who fails to file a return as provided in this chapter, or who violates any other provision of this chapter, shall be subject to a forfeiture not to exceed two hundred fifty dollars. Each day, or portion thereof, that such violation continues constitutes a separate offense. (Ord. 3513 §1(R), 1975).

Chapter 3.30

ECONOMIC DEVELOPMENT FUND

Sections:

3.30.010 Determination.
3.30.020 General purpose.
3.30.030 Eligible projects.
3.30.040 Availability.
3.30.050 Fiscal control.
3.30.060 Miscellaneous provisions.

3.30.010 Determination. The city council has determined to establish an economic development fund pursuant to the provisions of Section 62.12 (6) of the Wisconsin Statutes. (Ord. 4150 (part), 1981).

3.30.020 General purpose. The general purpose is to begin a working partnership with business, industry, labor and the public to create long-term employment opportunities, expand the local tax base and promote diversification of the commercial and industrial economy of Eau Claire. (Ord. 4150 (part), 1981).

3.30.030 Eligible projects. Expenditures from this fund shall be for the public purposes city-wide outlined below:

A. Land acquisition, occupant relocation, site clearance and site development for commercial, industrial or mixed use development;

B. Necessary on-site and off-site improvements;

C. Short-term or permanent financing in connection with the construction, relocation, expansion or rehabilitation of structures or facilities to be used for commercial, industrial or mixed use projects;

D. Allocations to the downtown development revolving loan fund (downtown loan pool);

E. Assistance to demonstration projects intended to further energy conservation;

F. Assistance to SBA-certified local development corporation for staffing and support services;

G. Assistance to SBA-qualified new businesses to secure financing and provide limited capitalization;

H. Professional fees incurred by the city for consulting services in connection with economic development programs;

I. Administrative and other fees incurred by the city in connection with the management and promotion of the economic development program;

J. Other projects or activities having a clear relationship to the economic development objectives of the city of Eau Claire. (Ord. 4150 (part), 1981).

3.30.040 Availability. This fund shall be utilized for public purposes only under the sole authority and only with the formal approval of the city council.

Approval shall take the form of a resolution adopted at an official meeting of the city council at which a quorum of the full council is present. (Ord. 4150 (part), 1981).

3.30.050 Fiscal control. A. The initial appropriation for this fund shall be from the city's state shared revenues and/or Federal Revenue Sharing Allocations in the anticipated amount of approximately two million two hundred thousand dollars on or before December 31, 1981.

B. The earmarked funds, with the exception of the FRS allocations, shall be deposited in an interest bearing account and set up as a revolving fund so that all proceeds and paybacks from the use of these funds shall accrue to the EDF specifically.

C. It shall not be the purpose of this fund to supplant or replace existing general fund operating or capital appropriations for regular city operations or public facilities.

D. At no time shall total commitments from the fund exceed available appropriations and the fund shall be subject to annual audit.

E. Funds from this appropriation may be disbursed in the form of grants, direct loans, guaranteed/insured loans or interest subsidies, depending on the type of project and leveraging potential which will insure the greatest return on the city's investment.

F. All intended uses of this funding source shall be presented in writing to the city council through the city manager for its information and consideration with appropriate plans, drawings and proposed agreement for city participation.

G. Proposed projects for this fund shall be in conformance with guidelines set forth in the city's revised comprehensive plan and shall not preclude utilization of such funding mechanisms as industrial revenue bonds, TIF districts, CDBG-sponsored programs, or local loan pools. (Ord. 4150 (part), 1981).

3.30.060 Miscellaneous provisions. A. The city manager shall annually report the preceding year's activity involving the economic development fund to the city council.

B. All projects will be reviewed for conformance with zoning, building, health and fire codes. An economic development fund review committee shall be established to recommend and comment on proposals, to the city council. Evaluation criteria to determine projects considered appropriate for the EDF shall be established in writing and provided to all fund applicants.

C. All projects shall be completed within twenty-four months of the receipt of funds directly from the economic development fund.

D. All funds allocated toward a project or activity on a loan basis must be sufficiently secured to result in minimal risk to the city of Eau Claire.

E. Each applicant for EDF participation shall comply with and require each of its contractors and subcontractors employed in the completion of an economic development project to comply with all grant and loan requirements promulgated by the city of Eau Claire. (Ord. 4150 (part), 1981).

Chapter 3.40

FEES AND LICENSES SCHEDULE

Sections:

3.40.010 Fees and licenses schedule.

3.40.010 Fees and licenses schedule. A. The city council hereby adopts and incorporates into this code by reference the City of Eau Claire Fees and Licenses Schedule. The schedule shall establish various fees and licenses as referenced throughout this code. The schedule may be amended hereafter by resolution of the city council. Such resolution may be introduced at any city council meeting and put to a vote at the subsequent meeting. Such resolution may be introduced and passed at the same meeting upon suspension of the rules.

B. Said schedule shall be on file in the office of the city clerk and shall be open to public inspection during business hours. (Ord. 6363 §5, 2002).

Title 4

CABLE TELEVISION

Chapters: 4.04 Cable Communications and 4.06 Rate Regulation were repealed in their entirety by council action on February 24, 2015 by Ordinance # 7127.

Title 5

BUSINESS LICENSES AND REGULATIONS

Chapters:

5.02 Amusement Devices
5.04 Pawnbrokers
5.06 Cigarettes Vendors
5.12 Electrician's License
5.16 Fortunetellers
5.20 House Movers
5.22 Heating, Ventilating, and Air Conditioning (HVAC) Contractor
5.24 Junk Dealer
5.26 Cabaret License
5.28 Alcohol Beverages
5.34 Direct Sellers
5.42 Pool Halls, Billiard Halls and Bowling Alleys
5.46 Theaters and Movie Houses
5.48 Roller Skating Rinks
5.52 Tree Trimmer
5.54 Vehicles for Hire
5.56 Massage Therapy Facilities, Massage Therapists and the Practice of Massage Therapy
5.57 Escort Service License
5.58 Tattooing and Body Piercing
5.60 Private Communications Systems
5.62 Weights and Measures
5.63 Minimum Wage
5.64 Dockless Bicycle Share
5.65 Scooter Share

Chapter 5.02

AMUSEMENT DEVICES*

Sections:

5.02.010 Definitions.
5.02.020 Operator's license--Required.
5.02.030 Operator's license--Fee--Records.
5.02.040 Operator's license--Issuance conditions--Term.
5.02.045 Qualified person on premises.
5.02.050 Offering a prize prohibited.
5.02.060 Violation--Penalty.
5.02.070 Operator's license--Revocation.

---

* For provisions of general charter law granting cities the right to license, tax and regulate business and business enterprises, see WSA 62.11(5).

5.02.010 Definitions. A. "Amusement devices" means any machine or device, coin-operated or for the operation of which a fee is charged, the operation or use of which involves a skill feature, and which do not deliver, pay out, or emit coins, tokens, coupons, tickets, receipts, chips or other things which may be redeemed, accepted or exchanged for money, merchandise, or other thing of value or for use in operating any such amusement device.

B. "Coin-operated phonograph" means any phonograph designed to be operated by use of coin, token, slug or other thing.

C. "Operator-possessor" means the person, firm or corporation operating or conducting the premises, as owner, lessee, tenant or otherwise, in which an amusement device or coin operated phonograph is located or contained for use.

D. No operator-possessor, as herein defined, shall distribute, lease, install or set up any amusement device or coin operated phonograph for use on any premises in the city without first obtaining a license so to do as herein provided. (Prior code §14.01).

5.02.020 Operator's license--Required. Any person, firm or corporation being an operator of an amusement device or coin operated phonograph, as herein defined, shall make application to the city clerk for a license. Licenses shall be issued by the city clerk. (Ord. 4515 §2, 1984; Prior code §14.02(part)).

5.02.030 Operator's license--Fee--Records. The license fee for operator's license shall be as stated in the City of Eau Claire Fees and Licenses Schedule and shall be paid to the city treasurer at the time of filing the application for such license hereunder. Operator's license shall be granted only to persons of good moral character and qualified to do business within the state. Applicants shall consent in their application to reasonable inspection of their records and devices by a representative of the city to determine compliance with this chapter. (Ord. 6363 §6, 2002; Ord. 3951 §2, 1979; Prior code §14.02(part)).

5.02.040 Operator's license--Issuance conditions--Term. A. The operator's license shall be issued in the name of operator-possessor and shall at all times be publicly and continuously displayed in such premises.

B. The license may be transferred to another location, during the current license year, and upon surrender and cancellation of the then existing license, a new license for the unexpired license period shall be issued.

C. The license period shall run from the first day of July to the thirtieth day of June of the succeeding year.

D. The city clerk shall provide appropriate forms of licenses and keep and maintain adequate records of the issue thereof as provided in this chapter. (Prior code §14.02(part)).

5.02.045 Qualified person on premises. As a condition of the license granted hereunder, the licensee, or other qualified, competent person designated by the licensee, shall be on the premises upon which are located licensed amusement devices at all times that such premises is open for business, for the purpose of maintaining order and decorum on the premises. (Ord. 3558 (part), 1975).

5.02.050 Offering a prize prohibited. It is unlawful for any operator or possessor, as herein defined, or for any other person, firm or corporation to offer, advertise, make or give or award any prize, money, or thing of value to any person for, through, or by reason of the use or operation of any amusement device. (Prior code §14.03).

5.02.060 Violation--Penalty. The provisions of Section 5.46.060 shall apply to violations of this chapter. (Prior code §14.05).

5.02.070 Operator's license--Revocation. Upon a second conviction for violations of any of the provisions of this chapter relating to amusement devices and coin-operated phonographs the operator's license shall stand revoked. (Prior code §14.06).

Chapter 5.04

PAWNBROKERS

Sections:

5.04.010 Purpose.
5.04.015 Adoption of State Statute.
5.04.020 Definitions.
5.04.030 Inspection of items.
5.04.040 (Reserved.)
5.04.050 License.
5.04.060 Display of license.
5.04.070 License application.
5.04.080 Investigation of license applicant.
5.04.090 License issuance.
5.04.100 Requirements.
5.04.110 Receipt required.
5.04.120 Label required.
5.04.130 Prohibited acts.
5.04.140 License denial, suspension, or revocation.
5.04.150 Fees.
5.04.160 Penalty.
5.04.170 Severability.

5.04.010 Purpose. A. The city council finds that the services offered by pawnshops, secondhand article dealers, and secondhand jewelry dealers provide an opportunity for individuals to readily transfer stolen property to those businesses. The council also finds that consumer protection regulation is warranted in transactions involving these businesses. The council further finds that pawnshops, secondhand article dealers, and secondhand jewelry dealers have outgrown the city's current ability to effectively or efficiently identify criminal activity related to them. The purpose of this chapter is to prevent pawnshops, secondhand article dealers, and secondhand jewelry dealers from being used to facilitate the commission of crimes and to assure that they comply with basic consumer protection standards, thereby protecting the public health, safety, and general welfare of the citizens, and pursuant to the authority granted by s. 134.71, Wis. Stats.

B. This chapter implements and establishes the required use of any electronic recordkeeping system approved by the Chief of Police or his or her designee to help the police department better

regulate current and future pawnshops to decrease and stabilize costs associated with the regulation of pawnshops, and to increase identification of criminal activities in pawnshops through the timely collection and sharing of transaction information.

C. The city council finds that any requirements included in this Chapter which differ from the requirements found in s. 134.71, Wis. Stats. are at least as stringent as the requirements found in this state statute. (Ord 7309, 2018; Ord. 7177, 2016; Ord. 6459, 2003).

5.04.015 Adoption of State Statute. In addition to the rights and definitions enumerated in Chapter 5.04 of the City of Eau Claire Code of Ordinances the city council hereby adopts s. 134.71, Wis. Stats. by reference including any future amendments, revisions, or modifications provided such amendments, revisions, or modifications do not restrict the City of Eau Claire's authority to enforce the provisions of this chapter. (Ord 7309, 2018; Ord. 7177, 2016)

5.04.020 Definitions. In this Chapter:

A. "Article" means any item defined as "article" in s. 134.71, Wis. Stats. including any future amendments, revisions, or modifications provided such amendments, revisions, or modifications do not restrict the City of Eau Claire's authority to enforce the provisions of this chapter. For purposes of this chapter "article shall also include "jewelry" when discussing the requirements and responsibilities of secondhand jewelry dealers.

B. "Billable transaction" means every reportable transaction except renewals, redemptions, voids, or extensions of existing pawns or purchases previously reported and continuously in the pawnbroker's possession.

C. "Charitable organization" means a corporation, trust, or community chest, fund, or foundation organized and operated exclusively for religious, charitable, scientific, literary, or educational purposes, or for the prevention of cruelty to children or animals, no part of the net earnings of which inures to the benefit of any private shareholder or individual.

D. "Customer" means a person with whom a pawnbroker, secondhand article dealer, or secondhand jewelry dealer or an agent thereof, engages in a transaction of purchase, sale, receipt, or exchange of any secondhand article.

E. "Jewelry" means any tangible personal property ordinarily wearable on the person and consisting in whole or in part of any metal, mineral or gem customarily regarded as precious or semiprecious. For the purposes of this Chapter "jewelry" shall also include secondhand "coins" which are purchased, sold, received or exchanged, and any item made in whole or in part from gold, silver, platinum or any metal, mineral, or gem customarily regarded as precious or semiprecious.

F. "Pawnbroker" means any person who engages in the business of lending money on the deposit or pledge of any article or purchasing any article with an expressed or implied agreement or understanding to sell it back at a subsequent time at a stipulated price. To the extent that a pawnbroker's business includes buying personal property previously used, rented, leased, or selling it on consignment, the provisions of this chapter shall be applicable. A person is not acting as a pawnbroker when engaging in any of the following:

1. Any transaction at an occasional garage or yard sale, an estate sale, a gun, knife, gem, or antique show, or a convention.

2. Any transaction entered into by a person engaged in the business of junk collector, junk dealer, or scrap processor, as described in s. 70.995(2)(x), Wis. Stats.

3. Any transaction while operating as a charitable organization or conducting a sale, the proceeds of which are donated to a charitable organization.

4. Any transaction between a buyer of a new article and the person who sold the article when new that involves any of the following:

a. The return of the article.

b. The exchange of the article for a different, new article.

5. Any transaction as a purchaser of a secondhand article from a charitable organization if the secondhand article was a gift to the charitable organization.

6. Any transaction as a seller of a secondhand article that the person bought from a charitable organization if the secondhand article was a gift to the charitable organization.

G. "Reportable transaction" means every transaction conducted by a pawnbroker, secondhand article dealer, or secondhand jewelry dealer in which an article or articles are received

through a pawn, purchase, consignment, or trade, or in which a pawn is renewed, extended, voided, or redeemed, or for which a unique transaction number or identifier is generated by their point-of-sale software, and is reportable except:

1. The bulk purchase or consignment of new or used articles from a merchant, manufacturer, or wholesaler having an established permanent place of business, and the retail sale of said articles, provided the pawnbroker must maintain a record of such purchase or consignment that describes each item, and must mark each item in a manner that relates it to that transaction record.

2. Retail and wholesale sales of articles originally received by pawn or purchase, and for which all applicable hold and/or redemption periods have expired.

H. "Secondhand" means owned by any person, except a wholesaler, retailer, or licensed secondhand article dealer or secondhand jewelry dealer, immediately before the transaction at hand.

I. "Secondhand article dealer" means any person, other than an auctioneer, who primarily engages in the business of purchasing or selling secondhand articles, except when engaging in any of the following:

1. Any transaction at an occasional garage or yard sale, an estate sale, a gun, knife, gem or antique show or a convention.

2. Any transaction entered into by a person while engaged in a business for which the person is licensed under s. 134.71(2) or (4), Wis. Stats. , including any future amendments, revisions, or modifications or while engaged in the business of junk collector, junk dealer or scrap processor as described in s. 70.995(2)(x).

3. Any transaction while operating as a charitable organization or conducting a sale the proceeds of which are donated to a charitable organization.

4. Any transaction between a buyer of a new article and the person who sold the article when new which involves either:

a. The return of the article; or

b. The exchange of the article for a different, new article.

5. Any transaction as a purchaser of a secondhand article from a charitable organization if the secondhand article was a gift to the charitable organization.

6. Any transaction as a seller of a secondhand article which the person bought from a charitable organization if the secondhand article was a gift to the charitable organization.

J. "Secondhand jewelry dealer" means any person, other than an auctioneer, who engages in the business of any transaction consisting of purchasing, selling, receiving or exchanging secondhand jewelry, or coins, or any item made in whole or in part from gold, silver, platinum or any metal, mineral, or gem customarily regarded as precious or semiprecious except for the following:

1. Any transaction at an occasional garage or yard sale, an estate sale, a gun, knife, gem or antique show or a convention.

2. Any transaction with a licensed secondhand jewelry dealer.

3. Any transaction entered into by a person while engaged in a business of smelting, refining, assaying or manufacturing precious metals, gems or valuable articles if the person has no retail operation open to the public.

4. Any transaction between a buyer of new jewelry and the person who sold the jewelry when new which involves either:

a. The return of the jewelry; or

b. The exchange of the jewelry for different, new jewelry.

5. Any transaction as a purchaser of secondhand jewelry from a charitable organization if the secondhand jewelry was a gift to the charitable organization.

6. Any transaction as a seller of secondhand jewelry which the person bought from a charitable organization if the secondhand jewelry was a gift to the charitable organization. (Ord 7309, 2018; Ord. 7177, 2016; Ord. 6459, 2003).

5.04.030 Inspection of items. At all times during the term of the license, the pawnbroker, secondhand article dealer, and secondhand jewelry dealer must allow the police department to enter the premises where the licensed business is located, including all off-site storage facilities, during normal business hours, except in an emergency, for the purpose of inspecting such premises and inspecting the items, wares, merchandise, and records therein to verify compliance with this chapter or other applicable laws. (Ord. 7177, 2016; Ord. 6459, 2003).

5.04.040 (Reserved).

5.04.050 License. No person may operate as a pawnbroker, secondhand article dealer, or secondhand jewelry dealer in the city unless the person first obtains a pawnbroker, secondhand article dealer, or secondhand jewelry dealer license under this chapter. (Ord 7309, 2018; Ord. 7177, 2016; Ord. 6459 §1, 2003)

5.04.060 Display of license. Each license issued under this chapter shall be displayed in a conspicuous place visible to anyone entering a licensed premise.

5.04.070 License application A person wishing to operate as a pawnbroker, secondhand article dealer, or secondhand jewelry dealer shall apply for a license to the city clerk. The clerk shall furnish application forms approved by the police department that shall require all of the following:

A. The applicant's name, place and date of birth, residence address, and residence addresses for the 10-year period prior to the date of the application.

B. The name and address of the business and of the owner of the business premises.

C. Whether the applicant is a natural person, corporation, limited liability company, or partnership, and:

1. If the applicant is a corporation, the state where incorporated and the names and addresses of all officers and directors.

2. If the applicant is a partnership, the names and addresses of all partners.

3. If the applicant is a limited liability company, the names and addresses of all members.

4. The name of the manager or proprietor of the business.

5. Any other information that the clerk may reasonably require.

D. A statement as to whether the applicant, including an individual, agent, officer, director, member, partner, manager, or proprietor, has been convicted of any crime, statutory violation punishable by forfeiture, or county or municipal ordinance violation. If so, the applicant must furnish information as to the time, place, and offense of all such convictions.

E. Whether the applicant or any other person listed in subsection D. above has ever used or been known by a name other than the applicant's name, and if so, the name or names used and information concerning dates and places used.

F. Whether the applicant or any other person listed in subsection D. above has previously been denied or had revoked or suspended a pawnbroker, secondhand article dealer, or secondhand jewelry dealer license from any other governmental unit. If so, the applicant must furnish information as to the date, location, and reason for the action. (Ord 7309, 2018; Ord. 7177, 2016; Ord. 6459, 2003).

5.04.080 Investigation of license applicant. The police department shall investigate each applicant and any other person listed in subsection 5.04.070C. above for a pawnbroker, secondhand article dealer, or secondhand jewelry dealer license. The department shall furnish the information derived from that investigation in writing to the city clerk. The investigation shall include each agent, officer, member, partner, manager, or proprietor. (Ord 7309, 2018; Ord. 7177, 2016; Ord. 6459, 2003).

5.04.090 License issuance. A. The city council shall grant the license if all of the following apply:

1. The applicant, including an individual, a partner, a member of a limited liability company, a manager, a proprietor, or an officer, director, or agent of any corporate applicant, does not have an arrest or conviction record, subject to ss. 111.321, 111.322 and 111.335 of the Wisconsin Statutes including any future amendments, revisions, or modifications.

2. The applicant provides to the city clerk a bond of $2,500 with not less than 2 sureties for the observation of all municipal ordinances or state or federal laws relating to pawnbrokers. The bond must be in full force and effect at all times during the term of the license.

B. No license issued under this subsection may be transferred.

C. Each license is valid from January 1 until the following December 31. (Ord 7309, 2018; Ord. 6459 §1, 2003).

5.04.100 Requirements. A. Identification. No pawnbroker, secondhand article dealer, or secondhand jewelry dealer may engage in a transaction of purchase, receipt, or exchange of any secondhand article from a customer without first securing adequate identification from the customer. At the time of the transaction, the pawnbroker, secondhand article dealer, or secondhand jewelry dealer shall require the customer to present one of the following types of identification:

1. Current, valid Wisconsin driver's license;
2. Current, valid Wisconsin identification card;
3. Current, valid photo identification card or photo driver's license issued by another state or province of Canada.

B. Transactions with minors.

1. Except as provided in subsection B. 2., no pawnbroker, secondhand article dealer, or secondhand jewelry dealer may engage in a transaction of purchase, receipt, or exchange of any secondhand article from any minor, defined as a person under the age of 18 years.
2. A pawnbroker, secondhand article dealer, or secondhand jewelry dealer may engage in a transaction described under subsection B. 1. if the minor is accompanied by his or her parent or guardian at the time of the transaction and the parent or guardian signs the transaction form and provides identification as required by this section.

C. Records required. At the time of any reportable transaction other than renewals, extensions, or redemptions, every pawnbroker, secondhand article dealer, or secondhand jewelry dealer must immediately record in English the following information by using ink or other indelible medium on forms or in a computerized record approved by the police department:

1. A complete and accurate description of each item, including, but not limited to any trademark, identification number, serial number, model number, brand name, or other identifying mark on such an item.
2. The purchase price, amount of money loaned upon or pledged therefore.
3. The maturity date of the transaction and the amount due, including monthly and annual interest rates and all pawn fees and charges.
4. Date, time, and place the item of property was received by the pawnbroker, secondhand article dealer, or secondhand jewelry dealer, and the unique alpha and/or numeric transaction identifier that distinguishes it from all other transactions in the pawnbroker, secondhand article dealer, or secondhand jewelry dealer's records.
5. Full name, current residence address, current residence telephone number, date of birth, and accurate description of the person from whom the item of property was received, including sex, height, weight, race, color of eyes, and color of hair.
6. The identification number and state of issue from any of the following forms of identification of the seller:
   a. Current, valid Wisconsin driver's license;
   b. Current, valid Wisconsin identification card;
   c. Current, valid photo identification card or photo driver's license issued by another state or province of Canada.
7. The signature of the person identified in the transaction.
8. Renewals, extensions, and redemptions. The pawnbroker, secondhand article dealer, or secondhand jewelry dealer shall provide the original transaction identifier, the date of the current transaction, and the type of transaction for renewals, extensions, and redemptions.
9. Record retention. Data entries shall be retained for at least 1 year from the date of transaction.
10. For every secondhand article purchased, received, or exchanged by a pawnbroker, secondhand article dealer, or secondhand jewelry dealer from a customer off the pawnbroker, secondhand article dealer, or secondhand jewelry dealer's premises, or consigned to the pawnbroker, secondhand article dealer, or secondhand jewelry dealer for sale on their premises, the pawnbroker, secondhand article dealer, or secondhand jewelry dealer shall keep a written inventory. In this inventory the pawnbroker, secondhand article dealer, or secondhand jewelry dealer shall record the name and address of each customer, the date, time, and place of the transaction, and a

detailed description of the article that is the subject of the transaction. The customer shall sign his or her name on a declaration of ownership of the secondhand article identified in the inventory and shall state that he or she owns the secondhand article. The pawnbroker, secondhand article dealer, or secondhand jewelry dealer shall retain an original and a duplicate of each entry and declaration of ownership relating to the purchase, receipt, or exchange of any secondhand article for not less than one year after the date of the transaction, except as provided in subsection E., and shall make duplicates of the inventory and declarations of ownership available to any law enforcement officer for inspection at any reasonable time.

D. Holding period. 1. Except as provided in subsection D. 3., any secondhand article purchased or received by a pawnbroker, secondhand article dealer, or secondhand jewelry dealer shall be kept on the premises or other place for safekeeping for not less than 30 days, unless a shorter holding period is expressly permitted by state law, after the date of purchase or receipt, unless the person known by the pawnbroker, secondhand jewelry dealer, or secondhand article dealer to be the lawful owner of the secondhand article redeems it, or unless the secondhand article dealer or secondhand jewelry dealer takes and maintain as many clear digital photographs of the item(s) as is reasonably necessary to identify the item(s) including, but not limited to, clear digital photograph(s) of the items' serial number in which case the holding period shall be 21 days. If a pawnbroker, secondhand jewelry dealer or secondhand article dealer takes clear digital photograph(s) and submits an electronic report that includes an image of all items the holding period shall be 7 days.

2. During the period set forth in subsection D. 1., the secondhand article shall be held separate from saleable inventory and may not be altered in any manner. The pawnbroker, secondhand article dealer, or secondhand jewelry dealer shall permit any law enforcement officer to inspect the secondhand article during this period. Within 24 hours after a request of a law enforcement officer during this period, a pawnbroker, secondhand article dealer, or secondhand jewelry dealer shall make available for inspection any secondhand article which is kept off the premises for safekeeping.

3. Subsections D. 1. and 2. do not apply to a secondhand article consigned to a pawnbroker.

E. Redemption period. Any person pledging, pawning or depositing any item for security must have a minimum of 60 days from the date of that transaction to redeem the item before it may be forfeited and sold. During the 60-day holding period, items may not be removed from the licensed location. Pawnbrokers, secondhand article dealers, and secondhand jewelry dealers are prohibited from redeeming any item to anyone other than the person to whom the receipt was issued, to any person identified in a written and notarized authorization to redeem the property identified in the receipt, or to a person identified in writing by the pledger at the time of the initial transaction and signed by the pledger, or with the approval of the police department. Written authorization for release of property to persons other than the original pledger must be maintained along with the original transaction record in accordance with subsection C. 9.

F. Police order to hold property.

1. Investigative hold. Whenever a law enforcement officer from any agency notifies a pawnbroker, secondhand article dealer, or secondhand jewelry dealer not to sell an item, the item must not be sold or removed from the premises. The investigative hold shall be confirmed in writing by the originating agency within 72 hours and will remain in effect for 15 days from the date of initial notification, or until the investigative order is canceled, or until an order to confiscate is issued, pursuant to subsection 2., whichever comes first.

2. Order to confiscate. a. If an item is identified as stolen or evidence in a criminal case, the police department may physically confiscate and remove it from the shop, pursuant to a written order from the police department.

b. When an item is confiscated, the person doing so shall provide identification upon request of the pawnbroker, secondhand article dealer, or secondhand jewelry dealer, and shall provide the pawnbroker, secondhand article dealer, or secondhand jewelry dealer with the name and phone number of the confiscating officer and the case number related to the confiscation.

c. When an order to confiscate is no longer necessary, the police department shall so notify the pawnbroker, secondhand article dealer, or secondhand jewelry dealer.

G. Daily reports to police. 1. Pawnbrokers and secondhand jewelry dealers must submit every reportable transaction to the police department daily in the following manner. Pawnbrokers and secondhand jewelry dealers must provide to the police department all information required in subsection C. and other required information, by transferring it from their computer to an electronic record keeping system approved by the Chief of Police or their designee via modem. All required records must be transmitted completely and accurately after the close of business each day in accordance with standards and procedures established by the police department using procedures that address security concerns of the pawnbroker and the police department. The pawnbroker must display a sign of sufficient size in a conspicuous place on the premises which informs all patrons that all transactions are reported.

2. If a pawnbroker is unable to successfully transfer the required reports by modem, the pawnbroker must provide the police department with printed copies of all reportable transactions by 12:00 noon the next business day.

3. If the problem is determined to be in the pawnbroker's system and is not corrected by the close of the first business day following the failure, the pawnbroker must provide the required reports as detailed in subsection 3., and shall be charged a daily reporting failure fee of $10.00 until the error is corrected, or, if the problem is determined to be outside the pawnbroker's system, the pawnbroker must provide the required reports in subsection 3. and resubmit all such transactions via modem when the error is corrected.

4. Regardless of the cause or origin of the technical problems that prevented the pawnbroker from uploading the reportable transactions, upon correction of the problem, the pawnbroker shall upload every reportable transaction from every business day the problem has existed.

5. The provisions of this section notwithstanding, the police department may, upon presentation of extenuating circumstances, delay the implementation of the daily reporting penalty.

6. Subsection G. shall not apply to businesses that did not have 200 reportable transactions in the past calendar year. However, any such pawnbroker must follow the daily reporting procedure for each reportable transaction by submitting a written transaction form approved by the police department to the department on the business day following the date of the reportable transaction.

H. Exception for customer return or exchange. Nothing in this section applies to the return or exchange from a customer to a pawnbroker of any secondhand article purchased from the pawnbroker. (Ord. 7309, 2018; Ord. 7177, 2016; Ord. 6841, 2008; Ord. 6459, 2003).

5.04.110 Receipt required. Every pawnbroker, secondhand article dealer, or secondhand jewelry dealer must provide a receipt to the party identified in every reportable transaction and must maintain a duplicate of that receipt for 3 years. The receipt must include at least the following information:

A. The name, address, and telephone number of the licensed business.

B. The date and time the item was received by the pawnbroker, secondhand article dealer, or secondhand jewelry dealer.

C. Whether the item was pawned or sold, or the nature of the transaction.

D. An accurate description of each item received, including, but not limited to, any trademark, identification number, serial number, model number, brand name, or other identifying mark on such an item.

E. The signature or unique identifier of the pawnbroker, secondhand article dealer, or secondhand jewelry dealer or employee that conducted the transaction.

F. The amount advanced or paid.

G. The monthly and annual interest rates, including all pawn fees and charges.

H. The last regular day of business by which the item must be redeemed by the pledger without risk that the item will be sold, and the amount necessary to redeem the pawned item on that date.

I. The full name, residence address, residence telephone number, and date of birth of the pledger or seller.

J. The identification number and state of issue from any of the following forms of identification of the seller:

1. Current, valid Wisconsin driver's license.
2. Current, valid Wisconsin identification card.
3. Current, valid photo driver's license or identification card issued by another state or province of Canada.

K. Description of the pledger or seller, including approximate sex, height, weight, race, color of eyes, and color of hair.

L. The signature of the pledger or seller. (Ord. 7177, 2016; Ord. 6459, 2003).

5.04.120 Label required. Pawnbrokers, secondhand article dealer, or secondhand jewelry dealer must attach a label to every item at the time it is pawned, purchased, or received in inventory from any reportable transaction. Permanently recorded on this label must be the number or name that identifies the transaction in the shop's records, the transaction date, the name of the item and the description or the model and serial number of the items as reported to the police department, whichever is applicable, and the date the item is out of pawn or can be sold, if applicable. Labels shall not be reused. (Ord. 7177, 2016; Ord. 6459, 2003).

5.04.130 Prohibited acts. A. No person under the age of 18 years may pawn or sell or attempt to pawn or sell goods with any pawnbroker, secondhand article dealer, or secondhand jewelry dealer, nor may any pawnbroker, secondhand article dealer, or secondhand jewelry dealer receive any goods from a person under the age of 18 years, except as permitted by s. 5.04.100 B. 2.

B. No pawnbroker, secondhand article dealer, or secondhand jewelry dealer may receive any goods from a person of unsound mind or an intoxicated person.

C. No pawnbroker, secondhand article dealer, or secondhand jewelry dealer may receive any goods unless the seller presents identification in the form of a valid driver's license, a valid state of Wisconsin identification card, or current, valid photo driver's license or identification card issued by the state of residency of the person from whom the item was received.

D. No pawnbroker, secondhand article dealer, or secondhand jewelry dealer may receive any item of property that possesses an altered or obliterated serial number or other identification number, or any item of property that has had its serial number removed.

E. No person may pawn, pledge, sell, consign, leave, or deposit any article of property not their own, nor shall any person pawn, pledge, sell, consign, leave, or deposit the property of another, whether with permission or without, nor shall any person pawn, pledge, sell, consign, leave, or deposit any article of property in which another has a security interest with any pawnbroker, secondhand article dealer, or secondhand jewelry dealer.

F. No person seeking to pawn, pledge, sell, consign, leave, or deposit any article of property with any pawnbroker, secondhand article dealer, or secondhand jewelry dealer shall give a false or fictitious name, nor give a false date of birth, nor give a false or out-of-date address of residence or telephone number, nor present a false or altered identification or the identification of another to any pawnbroker, secondhand article dealer, or secondhand jewelry dealer. (Ord. 7177, 2016; Ord. 6459, 2003).

5.04.140 License denial, suspension, or revocation. A. A license issued hereunder may be denied, revoked, or suspended by the city clerk upon administrative determination that the licensee has committed fraud, misrepresentation, or provided a false statement in the application for a license, or violated this chapter or ss. 134.71, 943.34, 948.62 or 948.63, Wis. Stats., or violated any local, state, or federal law substantially related to the businesses licensed under this chapter.

B. The city clerk may deny, suspend, or revoke any license issued under this section upon administrative determination that the applicant is not a citizen of the United States or a resident alien, or upon whom it is impractical or impossible to conduct a background or financial investigation due to the unavailability of information.

C. Appeal from a determination made under this section shall be made to the administrative review board under the procedures specified in ch. 1.06. (Ord. 6746 §4, 2007; Ord. 6459, 2003).

5.04.150 Fees. A. The license fee under this chapter shall be as contained in the City of Eau Claire Fees and Licenses Schedule.

B. A transaction fee as contained in the City of Eau Claire Fees and Licenses Schedule shall be charged. (Ord. 7309, 2018; Ord. 6459, 2003).

5.04.160 Penalty. Any person who is convicted of violating any of the provisions of this chapter shall forfeit not less than $5 nor more than $2,000, plus the costs of prosecution, and in default of such payment, shall be imprisoned in the county jail until such forfeiture and costs are paid, but not exceeding 90 days. Each day of violation shall constitute a separate offense. (Ord. 6459, 2003).

5.04.170 Severability. If any section of this ordinance is found to be unconstitutional or otherwise invalid, the validity of the remaining sections shall not be affected. (Ord. 6459, 2003).

Chapter 5.06

CIGARETTE VENDORS*

Sections:

5.06.010 License--Required.
5.06.020 License--Term.
5.06.030 License--Fee.
5.06.040 Violation--Penalty.

* For statutory requirement that cigarette vendors (except jobbers in interstate commerce) shall be licensed by cities, see WSA 134.65.

5.06.010 License--Required. It is unlawful for any person, firm or corporation, in any manner, directly or indirectly, upon any pretense or by any device, to manufacture, sell, exchange, barter, dispose of or give away, or keep for sale any cigarettes, cigarette paper or cigarette wrappers or any paper made or prepared for the purpose of being filled with tobacco in the city without first obtaining a license therefor, as provided in Sections 5.06.020 through 5.06.040. (Prior code §15.150).

5.06.020 License--Term. License for the manufacture, sale, exchange, barter, disposition of or giving away or keeping for sale of cigarettes, cigarette paper, or cigarette wrappers made or prepared for the purpose of being filled with tobacco for smoking in the city shall be issued by the city clerk. Every such license shall be issued on the first day of July in each year or thereafter whenever applied for and shall continue in force from date of issuance until the succeeding thirtieth day of June, unless sooner revoked for a violation of this chapter as provided in Section 5.60.040. (Prior code §15.151).

5.06.030 License--Fee. Every person desiring a license under this chapter shall file with the city clerk a written application therefor stating the name of the person and the place for which the license is desired. The license fee shall be as stated in the City of Eau Claire Fees and Licenses Schedule. Every license shall be signed by the city clerk and shall name the licensee and the place where the licensee is authorized to conduct such business. The license shall not be delivered until the applicant files with the clerk a receipt showing payment of the license fee to the city treasurer. (Ord. 6363 §7, 2002; Ord. 5875, 1998; Prior code §15.152).

5.06.040 Violation--Penalty. Any person violating any of the provisions of this chapter shall forfeit not less than five dollars nor more than one hundred dollars for each offense; and each day when any cigarettes or cigarette paper or wrappers are manufactured, sold or disposed of within the city without a license having been issued therefor shall be a separate offense. (Prior code §15.153).

Chapter 5.12

ELECTRICIAN'S LICENSE

Sections:

5.12.010 License/certification--Required.
5.12.020 Classes of licensees.
5.12.030 License--Application.
5.12.040 Testing--Fees.
5.12.050 License--Fees.
5.12.055 License renewal.

5.12.010 License/certification--Required. A. No person, firm or corporation shall engage in the business of installing, altering or repairing any electric wiring, fixtures or apparatus for any purpose whatsoever within any of the classes or types herein enumerated and defined, in the city without first having procured a license or state of Wisconsin certification therefor as provided in this chapter.

B. Licenses/certification will not be required for:

1. Adjustment or repairs of highly specialized electrical apparatus or equipment such as but not limited to computers, elevators, dental and medical equipment and X-ray machines, when performed by company or factory authorized personnel;

2. Only minor routine repairs and maintenance of existing facilities when performed by the owner or regularly employed maintenance personnel. Compliance with all code regulations shall be the responsibility of the owner;

3. Electrical work in or on federal or state owned buildings or property. (Ord. 5484 §1, 1995; Ord. 4046 §1, 1980; prior code §10.04(a)).

5.12.020 Classes of electricians. A. Control Wireman. On all construction projects, except as noted below, a person licensed as a control wireman shall be limited to doing electrical work on heating and cooling compressors, fuel fired or other furnaces, and shall wire only to the junction box on a unit attached by an electrical journeyman or master electrician and may do the necessary Class 2 control wiring.

On alterations or additions to a heating or cooling system of existing one- and two-family dwellings, a control wireman may wire the 120 volt or the 240 volt power to an existing circuit breaker panel, fuse panel or disconnect switch. A control wireman shall not alter the circuit breaker or fuse arrangement in electrical panels or add sub-panels or disconnect switches for additional circuits.

Installers of electrical signs shall be licensed as control wiremen if performing electrical work and shall be limited to doing the electrical work in and on an electrical advertising sign and shall attach the necessary wires to a junction box on or near the sign attached by an electrical journeyman or master electrician.

B. Beginning/apprentice electrician. All beginning/apprentice electricians must show proof of certification by the state of Wisconsin and must work under the direct supervision of a licensed or Wisconsin certified journeyman electrician or master electrician, at a ratio not greater than prescribed for apprentices by the Eau Claire area electrical joint apprenticeship committee rules on file with the state of Wisconsin apprenticeship division, the total not to exceed beginning electricians and temporary electricians combined.

C. Journeyman. Each applicant for a license as a journeyman shall prove skill in the installation of electrical wiring for lights, heat and power. Holders of a journeyman's license may perform all types of electrical work on any premises within the city of Eau Claire. All holders of a journeyman's license must perform such work under the direction of a duly licensed master electrician or Wisconsin certified master electrician. Licensing requirements under this section shall apply only to those licenses issued on or before June 30, 1995. Thereafter, anyone seeking to operate in the city as a journeyman electrician must show proof of certification as a journeyman electrician from the state of Wisconsin.

D. Master Electrician. Anyone seeking to operate in the city as a master electrician must show proof of certification by the state of Wisconsin as a certified master electrician or a certified restricted master electrician for the city of Eau Claire.

E. Electrical Contractor. Any person engaged in the business of installing, altering or repairing any electrical wiring, fixtures or apparatus for any purpose whatsoever in the city may be entitled to receive an electrical contractor license. All electrical contractor licensees must:

1. Maintain a recognized place of business;

2. Provide workers' compensation for all employees in accordance with Wisconsin statutes;

3. Possess a Wisconsin electrical contractor-restricted certification for the city of Eau Claire or employ a full-time certified Wisconsin master electrician;

4. Employ only electricians who have obtained either a temporary or annual electrician's license from the city or a certified electrician's license from the state of Wisconsin; and

5. Provide the electrical inspectors with a list of employed electricians.

F. Temporary Licenses.

1. Temporary licenses are available only for individuals employed by a licensed electrical contractor.

2. To protect the safety of the applicant, co-workers and the community, persons licensed under this section must work under the direct supervision of a licensed or Wisconsin certified journeyman electrician or master electrician at a ratio no greater than the ratio prescribed for electrical apprentices by the Eau Claire area electrical joint apprenticeship committee, the total not to exceed beginning electricians and temporary electricians combined. This requirement may be waived if the licensee submits proof of journeyman qualifications or status from another city, state or comparable governmental unit.

3. The contractor must sign the temporary license application unless the licensee submits proof of journeyman qualifications from another city, state or comparable governmental unit.

4. Temporary licenses are valid only for work performed for the signatory contractor.

5. In the event of lay-off, the temporary license is terminated until the licensee is recalled by the signatory contractor or another contractor signs the temporary license. However, only one annual fee will be required. (Ord. 6163 §1, 2001; Ord. 5484 §2, 1995; Ord. 5385 §1, 1994; Ord. 5240 §1, 1992; Ord. 5193 §1, 1991; Ord. 4579 §§1, 2, 3, 1985; Ord. 4185 §1, 1981; Ord. 4105, 1980; Ord. 4046 §2, 1980; Ord. 3997 §§l,2, 1979; Ord. 4284 §1; Ord. 4284, 1982; prior code §10.04 (b)).

5.12.030 License--Application. A. Application for a license shall be made to the city clerk. The applicant for control wireman shall successfully pass an examination administered by the electrical inspector so as to determine qualifications and competency to engage in the work and duties incidental to the class of license defined in section 5.12.020 A. Licenses under section 5.12.020 A., C. and E. shall be issued by the city clerk. (See section 2.16.030, "City Clerk," for appeal procedure.) Application for a license under s. 5.12.020 F. shall be made to an electrical inspector of the city inspections division. An application fee as stated in the City of Eau Claire Fees and Licenses Schedule shall be paid at the time of application.

B. The electrical inspector shall hold license examination, if there are registered applications, on the third Tuesday after the first Monday in January, April, July and October of each year, commencing at 7:00 p.m. and running until 10:00 p.m. Should the third Tuesday after the first Monday of January, April, July or October fall on a legal holiday, the examination shall be given the following day at the same time. (Ord. 6363 §8, 2002; Ord. 5859 §1, 1998; Ord. 5484 §3, 1995; Ord. 4579 §4, 1985; Ord. 4515 §5, 1984; Prior code §10.04(c)).

5.12.040 Testing--Fees. An applicant for a license as control wireman shall, at the time of filing an application, remit a fee as stated in the City of Eau Claire Fees and Licenses Schedule.

The fee shall be forfeited in case the applicant fails to appear for examination at the time set; provided that in the case of sickness or for other just cause, the electrical inspector may grant the applicant the privilege to appear for the examination at a later date. Such fee shall be forfeited in case the applicant fails to pass the examination. (Ord. 6363 §8, 2002; Ord. 5859 §2, 1998; Ord. 5484 §4, 1995; Ord. 5385 §2, 1994; Ord. 4789 §3, 1987; Ord. 3951 §4(part), 1979; Prior code §10.04(d)).

5.12.050 License--Fees. Licenses shall be required annually, and the license period shall commence on July first of each year and expire on the thirtieth day of June of the following year. The annual license fee shall be as stated in the City of Eau Claire Fees and Licenses Schedule. (Ord.

6363 §8, 2002; Ord. 6163 §2, 2001; Ord. 5484 §5, 1995; Ord. 5385 §3, 1994; Ord. 4789 §3, 1987; Ord. 3997 §3, 1979; Ord. 3951 §4(part), 1979; Prior Code §10.04(e)).

5.12.055 License renewal. A. Notice of renewal.

1. Notice for renewal of a license issued under this subchapter shall be sent to a person holding a valid license no less than 2 months prior to expiration.

2. The renewal notice shall be sent to the address given on the latest license form on file with the city clerk.

3. A person holding a license shall be responsible for notifying the city clerk of any change in mailing address.

4. Failure to receive a notice for license renewal shall not be an excuse for failure to renew.

B. Delinquent or lapsed license. The city clerk may renew a license within 6 months following license expiration upon payment by the applicant of a late renewal fee as stated in the City of Eau Claire Fees and Licenses Schedule. All other renewals of delinquent or lapsed licenses shall require reapplication to again qualify for a license. (Ord. 6363 §8, 2002; Ord. 5385 §4, 1994; Ord. 5240 §2, 1992).

Chapter 5.16

FORTUNETELLERS*

Sections:

5.16.010 Prohibited.
5.16.020 Violation--Penalty.

* For provisions of general charter law granting cities the power to license, tax and regulate business enterprises, see WSA 62.11(5).

5.16.010 Prohibited. No person shall engage in carrying on or practicing for a fee, pay or hire in the city the business of a fortuneteller, palmister, astrologer or clairvoyant. (Prior code §15.44).

5.16.020 Violation--Penalty. Any person violating the provisions of this chapter shall, upon conviction thereof, be fined in a sum of not exceeding fifty dollars and costs of prosecution for each offense; provided that each day such business is conducted shall be a separate offense; and in default of payment of said fine and costs the defendant shall be imprisoned in the county jail for not more than thirty days. (Prior code §15.45).

Chapter 5.20

HOUSE MOVERS*

Sections:

5.20.010 License--Required.
5.20.020 Application.
5.20.030 Permit--Moving conditions.
5.20.040 Moving completion--Street inspection.
5.20.050 License and permit required.
5.20.060 Property interference--Owner notification.
5.20.070 Violation--Penalty.

* For provisions of general charter law granting cities the power to license, tax and regulate business enterprises, see WSA 62.11(5).

5.20.010 License--Required. No person shall pursue the business of housemoving in the city, or move any building or part of a building, unless exempted under s. 5.20.050 B., in, along or across any public street or public ground in the city, unless he or she previously has obtained a license to pursue said business, and a permit to move such building or part thereof as hereinafter provided; but two or more persons constituting a partnership may obtain such license or permit jointly. (Ord. 5399 §1, 1994; Prior code §15.33).

5.20.020 Application. Any person desiring to procure a license as housemover, shall make written application therefor to the city clerk and such license shall be issued by the city clerk, subject to compliance by the applicant with the following requisites:

A. The applicant shall pay to the city treasurer a fee as stated in the City of Eau Claire Fees and Licenses Schedule.

B. The applicant shall file with the city clerk a bond running to the city in the penal sum of five thousand dollars, with one or more sureties, to be approved by the city attorney, conditioned that the applicant, license to him being granted, will, in prosecuting the business of a housemover in the city, conform to all regulations relating thereto which are or may be established by the city council; and that he will promptly repair and make good to the satisfaction of the street commissioner any and all damages to any pavement, sidewalk, crosswalk, hydrant, street or other public property done or caused by himself, his servants or employees in moving any building, or in connection with the moving thereof; and that he will reimburse the city for any expenses the city incurs in connection with moving thereof; and that he will indemnify and keep harmless the city against all liability for damages, costs or expenses arising or which may arise in favor of any person by reason of any negligence or misconduct on his part, or on account of his servants or employees in connection with the moving of any building, or the use of any public street or ground for that purpose. Such license shall be signed by the city clerk, and shall expire in one year from the date of its issue.

C. No person shall be granted a license to engage in the business of house moving without first filing with the city clerk a certificate of an insurance company duly authorized to do business in Wisconsin, certifying that there is in effect an insurance policy insuring the applicant and holding the city and city officials harmless from any and all claims for personal injury or damage to property as follows: for personal injuries: liability insurance in the amount of $250,000 for each person; and $500,000 for each accident; for property damage: liability insurance in the amount of $500,000. (Ord. 6363 §9, 2002; Ord. 5399 §1, 1994; Ord. 4789 §5, 1987; Ord. 4763, 1987; Ord. 4515 §6, 1984; Ord. 4366 §2, 3, 1983; Prior code §15.34).

5.20.030 Permit--Moving conditions. A. Before any person shall move any building or part of any building, except as exempted in s. 5.20.050 B., in, along or across any public street or ground in the city, that person shall file an application for moving permit with a city building inspector. A fee for such application as stated in the City of Eau Claire Fees and Licenses Schedule shall be paid to the city treasurer prior to the time that such application is processed. No permit shall be issued by a city building inspector until the application is approved by the chief of police, fire chief, director of community services, and director of engineering, or any designees of those individuals. The applicant shall also file a copy of the notice served upon the owners of wires suspended in streets involved in any house moving projects. Such applicant also agrees by the acceptance of a permit to pay any costs related to the removal and reinstallation of such wires.

B. Upon approval of an application, a moving permit shall be issued by a city building inspector. The fee shall be as stated in the City of Eau Claire Fees and Licenses Schedule. Every permit to move a building shall state all conditions to be complied with, designate the route to be taken, the times the operation will take place, and the limit of time for removal. The removal of a building shall be continuous during all hours of the day, and day by day, and at night if the building inspector so orders, until completed, with the least possible obstruction to thoroughfares. The permittee shall provide the police department a minimum of 72 hours notice prior to the scheduled time of the move. No building shall be allowed to remain overnight upon any street crossing or street

intersection or so near to any such crossing or intersection as to prevent easy access to any fire hydrant.

C. Any permittee shall be deemed guilty of a new offense for each day any violation of this section shall exist after written notice to abate the same by the building inspector. (Ord. 7202, 2016; Ord. 6363 §9, 2002; Ord. 6233 §1, 2001; Ord. 5399 §1, 1994; Ord. 4789 §5, 1987; Ord. 4366 §4, 1983; prior code §15.35).

5.20.040 Moving completion--Street inspection. Every person receiving a permit to move a building shall, within one day after the building reaches its destination, report that fact to the building inspector who shall with the superintendent of streets thereupon inspect the streets and other public property over which the building has moved and ascertain their condition. If the removal of the building has caused any damage to such streets or public property, the superintendent of streets or other appropriate public official, at the expense of the applicant for permit, shall forthwith repair any such damage, and promptly report the amount thereof to the building inspector, who shall require the payment to the city of such expense in accordance with the permit and bond accompanying the same and make due and promptly report and file the same with the city clerk. (Ord. 4366 §5, 1983; prior code §15.36).

5.20.050 License and permit required. A. Except as provided in subsection B., no person shall move or attempt to move any building or part of any building in, along or across any public street or ground in the city, without having obtained a license as housemover, or without having procured a permit as herein provided.

B. Subsection A. shall not apply to a building or part of a building which is 12 feet or narrower, 13 feet or lower when loaded on a vehicle used for moving, and 200 square feet or smaller. (Ord. 5399 §1, 1994; prior code §15.37).

5.20.060 Property interference--Owner notification. A. Nothing in any license or permit granted pursuant to the provisions of this chapter, shall be construed as authorizing the holder thereof to break, injure or move any telegraph, telephone, electric motor or electric light wire or poles, or in any way to injure any shade tree or other private property without permission from the owner or owners thereof.

B. Whenever it shall be necessary for any authorized person to move in, along or across any of the streets or public places, buildings or structures of such height or size as to interfere with poles or wires erected in such streets or public places, the company, or persons owning or operating the poles and wires shall upon forty-eight hours' written notice served upon any agent or manager of said company or person, by such authorized person, temporarily remove the poles or wires for the free passage of such building or structure; provided, that in case the poles and wires shall not be removed by the company or person after notice as required by this chapter, the removal of the same may be caused and directed by the city manager or superintendent of streets at the expense of the company or person. The permittee shall be responsible for payment of the actual cost to any company required to perform such work. (Ord. 4366 §6, 1983; prior code §15.38).

5.20.070 Violation--Penalty. A. Any person who violates any of the provisions of this chapter, shall, upon conviction, pay a forfeiture not to exceed five hundred dollars for each and every offense, in addition to the cost of prosecution.

B. If the defendant fails or refuses to pay the forfeiture and costs, the court shall enter a judgment that defendant be imprisoned in the county jail for a term not to exceed three months unless the forfeiture and costs are sooner paid, and every day of violation shall be considered a separate offense. (Ord. 4366 §7, 1983).

Chapter 5.22

HEATING, VENTILATING, AND AIR CONDITIONING (HVAC) CONTRACTOR

Sections:

5.22.010 License--Required--Classifications.
5.22.020 License--Application.
5.22.030 License--Fees--Examination.
5.22.040 Insurance--Required.
5.22.050 License--Issuance.
5.22.055 License renewal.
5.22.060 License--Suspension and revocation.
5.22.070 License--Suspension or revocation--Notice--Hearing.

5.22.010 License--Required--Classifications. A. It is unlawful for any person, except as otherwise provided herein, to install, replace or alter any HVAC equipment, including controls, piping, duct, vent, fuel oil tanks and electric connections with such HVAC equipment and appurtenances enumerated in Chapter 16.28 without first having obtained a HVAC contractor's license for such work, as follows (all tanks and piping regulated by COMM Chapter 10 are excluded from this section):

1. A Class "A-1" license shall be issued to a person desiring to enter into the business of installing, altering or repairing of forced air heating, cooling and ventilation equipment.

2. A Class "A-2" license shall be issued to a person desiring to enter into business of installing, altering or repairing steam or hot water equipment.

3. A Class "B" license shall be issued to a person desiring to enter into the business of installing gas, oil or solid fuel equipment, such as space heaters and fireplaces, vents, gas piping, controls, servicing, cleaning and repair of the above-mentioned equipment, but shall not permit installation, alteration or repair of central heating, cooling, and ventilation equipment and distribution systems.

B. Class "A-1" and "A-2" licensees may engage in work covered under the Class "B" license.

C. The licensing requirements of this section shall not apply to an employee of a city licensed HVAC contractor.

D. The licensing requirements of this section shall not apply to a person who holds a state of Wisconsin HVAC qualifier certification or employees thereof.

E. The licensing requirement of this section shall not apply to the owner of a one-family building who resides therein.

F. Those not required to be licensed by the city shall secure the permit required for any HVAC work and shall comply with all installation standards and tests as required therefor. A homeowner may make such tests and the representative of the city inspection division shall be witness to the fact that such tests were made.

G. Licenses shall be required annually and the license period shall commence on July 1st and expire on June 30th of the following year.

(Ord. 6936, 2010; Ord. 6482, 2004; Ord. 6166 §2, 2001; Ord. 5399 §2, 1994; Ord. 4356 §1, 1983; Ord. 3454 §1, 1974; Prior code §1505).

5.22.020 License--Application. Each applicant for an HVAC contractor's license shall maintain a place of business. Application for an HVAC contractor's license shall be upon forms provided by the inspections division and filed with the heating inspector. The same shall recite:

A. Name, address and telephone number of applicant;

B. Address of place of business already established or to be established;

C. Previous experience of the applicant in the HVAC field;

and shall be accompanied by the license examination fee as stated in the City of Eau Claire Fees and Licenses Schedule. The fee shall be forfeited in case the applicant fails to appear for examination at the time set; provided that in the case of sickness or for other just cause, the board may grant the applicant the privilege to appear for the examination at a later date. Such fee shall be forfeited in case the applicant fails to pass the examination.

D. Examinations for HVAC licenses shall be given during the months of January, April, July and October, except as otherwise determined by the board. Applications shall be filed with the heating inspector thirty days prior to the date of examination.

E. The board shall formulate an appropriate examination to test the competency and capabilities of applicants for the class of license applied for. This requirement may be waived by the

board upon satisfactory showing that the applicant possesses the requisite capability and competency to perform the work permitted under the class of license applied for and that formal examination therefore is unnecessary. The board of heating examiners, upon being satisfied as to the competency of the applicant, shall authorize the issuance of a license by the city for the classification of HVAC work for which the applicant is qualified. (Ord. 6363 §10, 2002; Ord. 6166 §3, 2001; Ord. 5399 §2, 1994; prior code §1505.1).

5.22.030 License--Fees--Examinations. If the examination is passed or the applicant receives a waiver, license fees as contained in the City of Eau Claire Fees and Licenses Schedule shall be paid and evidence of insurance submitted. (Ord. 6363 §10, 2002; Ord. 5399 §2, 1994; Ord. 5138 §§1, 2, 1991; Ord. 3454 §2, 1974; Prior code §1505.2).

5.22.040 Insurance--Required. Each HVAC contractor shall maintain insurance for, or provide other proof to the City's satisfaction of, protection against claims under workers compensation acts; claims due to personal injury or death of any employee or any other person; claims due to injury or destruction of property; and claims arising out of errors, omissions, or negligent acts for which the applicant is legally liable. The limits for such insurance shall be as follows: comprehensive general liability for personal (bodily) injury and property damage combined (including contractual liability, products, and completed operations) - $500,000 per occurrence; auto liability for personal (bodily) injury and property damage - $500,000 per occurrence. A certificate of insurance showing the amounts and extent of such insurance shall be submitted to the city clerk prior to the issuance of a license. (Ord. 6166 §4, 2001; Ord. 5138 §3, 1991; Prior code §1505.3).

5.22.050 License--Issuance. Licenses shall be granted by the city clerk only upon recommendation of the board. Annual renewal of license may be issued by the city clerk upon recommendation of the board, confirmation of insurance coverage as required under section 5.22.040, and payment of fee. (Ord. 5138 §4, 1991; Ord. 4515 §7, 1984; Ord. 3454 §3, 1974; Prior code §1504.4).

5.22.055 License Renewal. A. Notice of renewal.

1. Notice for renewal of a license issued under this subchapter shall be sent to a person holding a valid license no less than 1 month prior to expiration.

2. The renewal notice shall be sent to the address given on the latest license form on file with the city clerk or subsequent changed address of which notice has been received.

3. A person holding a license shall be responsible for notifying the city clerk of any change in mailing address.

4. Failure to receive a notice for license renewal shall not be an excuse for failure to renew.

B. Delinquent or lapsed license. The city clerk may renew a license within 6 months following license expiration upon payment by the applicant of a late renewal fee as stated in the City of Eau Claire Fees and Licenses Schedule. All other renewals of delinquent or lapsed licenses all require examination to again qualify for a license. (Ord. 6363 §10, 2002; Ord. 5399 §2, 1994).

5.22.060 License--Suspension and revocation. Licenses shall be subject to suspension or revocation for violation by the licensee of any provision or requirement of this chapter and Chapter 16.28. The following violations shall be deemed grounds for suspension or revocation of licenses:

A. Misrepresentation of a material fact in obtaining a license or a renewal thereof;

B. Use of such license in obtaining a work permit for another;

C. Failure to secure the permits, inspections and approvals required by this chapter and Chapter 16.28;

D. Repeated violations of this chapter and Chapter 16.28, or failure or refusal to promptly correct any installation or part thereof made in an incompetent or improper manner when requested to do so by the inspector;

E. Flagrant violation of city codes and standards with respect to work performed or sales made under a license;

F. Or on such other grounds not herein enumerated as may seem good and sufficient to the board. (Ord. 3454 §4, 1974; prior code §1505.5).

5.22.070 License--Suspension or revocation--Notice--Hearing. A. Notice of suspension or revocation shall be given licensees in writing by the board. The same shall be deposited in the mail addressed to licensee and sent by registered mail with return receipt requested. The notice shall recite that a hearing will be had not less than five days thereafter, at a designated place in the City Hall, to consider such suspension or revocation. At the hearing licensee may appear in his/her own behalf or be represented by legal counsel.

B. The board shall make its determination upon such suspension or revocation within forty-eight hours thereafter, and shall forward a copy of such decision to the licensee forthwith by registered mail. A decision by the board may be appealed to the council. (Ord. 5399 §2, 1994; prior code §1505.6).

Chapter 5.24

JUNK DEALER*

Sections:

5.24.010 State statutes adopted.
5.24.020 Definitions.
5.24.030 License--Required.
5.24.040 License--Fee--Additional licenses.
5.24.050 License--Term--Conditions.
5.24.060 License--Revocation--Suspension--Appeal.
5.24.070 License--Display.
5.24.075 Junk hauling regulations.
5.24.080 Junk storage regulations.
5.24.090 Violation--Penalty.

* For statutory provisions regarding junk dealers' receiving property from children, see WSA 948.63; for provisions regarding dealers in junked automobiles, see WSA 175.25.

5.24.010 State statutes adopted. The provisions of Sections 175.25 and 943.35 of the Wisconsin Statutes and also all acts amendatory thereof and supplementary thereto relative to storage and sale of and the business of dealing in junk and junked automobiles are adopted as a portion of this chapter as far as possible, exclusive of the penalty provisions therein provided for which the penalties provided in this chapter of the municipal code shall be substituted, and except as otherwise lawfully provided by city ordinance. (Prior code §15.135).

5.24.020 Definitions. A. "Automobile junk" means any junked automobile or part thereof accumulated for storage or stored outside of any building, but shall not include the temporary storage of automobiles no longer than required for the making of accident settlements, where no salvage, dismantling, demolition or abandonment of such automobiles occurs, and the automobiles are ultimately transferred to an automobile junk dealer, or to another entity for repair.

B. "Automobile junk dealer" means a person, firm, partnership or corporation which accumulates or stores any junked automobile or part thereof outside of any building.

C. "Junk" means rags, metal, glass, paper, cardboard, packaging, or other similar material.

D. "Junk dealer" means a person, other than a person required to be licensed under Chapter 8.32, who engages in, keeps, conducts or carries on a business for the purpose, collection and sale of junk, which is not thereafter disposed of in a landfill. (Ord. 5188 §1, 1991; Ord. 4232, 1981; Ord. 4038 §1, 1979; prior code §15.136).

5.24.030 License--Required. It is unlawful for any person, firm, partnership or corporation to operate as a junk dealer or automobile junk dealer or to travel from place to place within the city limits for the purpose of buying, selling or trading in junk, or for the purpose of accumulating automobile junk, at any place within the corporate limits of the city without first obtaining a license therefor as hereinafter provided. No premises may be maintained in connection with such operation except within an industrial zone according to the zoning ordinances of the city. Licensing shall not be required for occasional operations conducted by any person whose real property is exempt, in whole or in part, from real property taxation within the state by virtue of Wisconsin Statutes Section 70.11. (Ord. 4038 §2, 1979; Prior code §15.137).

5.24.040 License--Fee--Additional licenses. The license fee hereunder shall be as stated in the City of Eau Claire Fees and Licenses Schedule. Separate licenses shall be required for each shop or yard maintained on separate premises. In addition separate licenses shall be required for each person on foot and each cart, wagon, vehicle or motor vehicle traveling from place to place within the city for the purpose of purchasing or selling or soliciting the purchase or sale of junk, or for the purpose of accumulating automobile junk; provided, however, that the provisions of this section shall not apply to persons and vehicles employed by said dealers exclusively for the purpose of receiving or delivering as distinguished from purchasing, selling or soliciting, as set out above. (Ord. 6363 §11, 2002; Ord. 6233 §2, 2001; Ord. 4789 §6, 1987; Ord. 3951 §6, 1979; Prior code §15.138).

5.24.050 License--Term--Conditions. A. The license year shall run from July 1st to June 30th. Applications for licenses hereunder shall be filed, together with the license fee, with the city clerk, on or before April 1st of each year, for the license year beginning the following July 1st; except that applications for the license year ending June 30, 1949, shall be so filed within thirty days after passage and publication hereof.

B. All licenses issued hereunder shall be issued by the city clerk and shall limit the area and specify the locations of the premises licensed.

C. No license issued hereunder shall be transferred or the area on which operations are authorized to be conducted shall be changed.

D. No licensee hereunder shall purchase any junk or automobile junk as herein defined, except old rags and waste paper from any minor under eighteen years of age, without the written consent of parent or guardian. (Ord. 4515 §8, 1984; Prior code §15.139).

5.24.060 License--Revocation--Suspension--Appeal. Any license issued hereunder may be revoked or suspended at any time by a duly authorized city official upon administrative determination that the licensee has failed or refused to comply with the provisions of this chapter, state or federal rules, regulations, or laws. Appeal from the afore stated determination shall be made to the administrative review board under the procedures specified in ch. 1.06. Appeal shall stay the contested administrative determination pending decision by the board. (Ord. 6572 §2, 2005; Prior code §15.140).

5.24.070 License--Display. Each person so licensed as aforesaid traveling on foot and each driver of a licensed cart, wagon, vehicle or motor vehicle shall have with him when driving or traveling on foot, the license so issued, and shall exhibit the same to any police officer or other officer or any member of the city council when requested. It is unlawful for any such licensee or driver to transact any business as herein described without having the license in his or her possession; and each licensed junk dealer and automobile junk dealer shall display said license at all times in a conspicuous place in his place of business. (Prior code §15.141).

5.24.075 Junk hauling regulations. Any truck, wagon or other vehicle used in collecting or hauling junk or automobile junk shall be of such construction and shall be operated so that there is no spilling, dropping or scattering of any material therefrom along the streets, alleys or public ways of the city. (Ord. 4038 §3, 1979).

5.24.080 Junk storage regulations. A. Unbaled paper and tags shall be stored at all times inside enclosed buildings.

B. Junk and automobile junk shall be stored at all times as follows:

1. When stored outside of enclosed buildings:

a. Fenced from view of persons walking or riding upon adjacent sidewalks or streets, said fences being of standard design, construction and finish and certified as having been approved by the city building inspector;

b. Neatly arranged in rectangular rows, all materials being easily accessible, such rows being separated according to type of material contained therein;

2. When stored inside enclosed building in compliance with the Wisconsin State and city of Eau Claire building codes and in compliance with applicable provisions of law and ordinance. (Prior code §15.142).

5.24.090 Violation--Penalty. Any person violating any of the provisions hereof shall, on conviction thereof, forfeit not exceeding two hundred dollars for each violation together with the costs of prosecution, and in default of the payment of such forfeiture and costs shall be imprisoned in the county jail of Eau Claire County for a term of not more than thirty days. Each day that a violation of this chapter continues shall be deemed a separate offense. (Ord. 4201, 1981; Prior code §15.143).

Chapter 5.26

CABARET LICENSE*

Sections:

5.26.010 License required for liquor sale.
5.26.020 Class A cabaret license.
5.26.030 Class B cabaret license.
5.26.040 License--Term.
5.26.050 License--Revocation--Suspension--Appeal.
5.26.060 License--Application.
5.26.070 License--Conditions.
5.26.080 Civic Center exemption.
5.26.090 Violation--Penalty.

* For provisions of general municipality law regarding sale of nonintoxicating beverages, see WSA 66.0433; for provisions regarding licenses to sell fermented malt beverages, see WSA 125.04; for provisions regulating intoxicating liquors generally, see WSA 125.

5.26.010 License required for liquor sale. No person, firm or corporation licensed to sell fermented malt beverages or intoxicating liquors shall offer, suffer or permit in the place for which the license is granted any dancing, whether public or private, or exhibitions, singing, live music, or other entertainment of any nature whatsoever, except amateur, without having first complied with the terms of this chapter relating to same and having procured a license so to do. All licenses shall be subject to inspection to insure continual compliance with the terms of this chapter. (Ord. 5954 §1, 1999; Prior code §15.170 A(part)).

5.26.020 Class A cabaret license. A class A cabaret license, when issued by the city clerk under authority of the city council, shall entitle the holder thereof to give, permit, produce, present, conduct and offer entertainment or exhibitions consisting of music, dancing, singing, floor shows and cabaret performances only upon the licensed tavern premises. The fee for such class A cabaret license shall be as stated in the City of Eau Claire Fees and Licenses Schedule. (Ord. 6363 §12, 2002; Ord. 3951 §7(part), 1979; Prior code §15.170 A(1)).

5.26.030 Class B cabaret license. A class B cabaret license, when issued by the city clerk under the authority of the city council, shall entitle the holder thereof to engage in all of the activities

permitted under a class A cabaret license, except that the holder of a class B cabaret license shall not permit any dancing on the licensed premises by any person other than entertainers. The fee for a class B cabaret license shall be as stated in the City of Eau Claire Fees and Licenses Schedule. (Ord. 6363 §12, 2002; Ord. 3951 §7(part), 1979; Prior code §15.170 A(2)).

5.26.040 License--Term. All class A and class B cabaret licenses shall expire on the thirtieth day of June thereafter, and the full license fee shall be charged for the whole or fraction of a year. Such license may in the discretion of the city council be transferred to a new location upon the payment of a transfer fee as stated in the City of Eau Claire Fees and Licenses Schedule. The new premises must comply in all respects with all provisions of this chapter as if a new application were being made. This same provision shall apply whenever a change of agent of a corporation occurs, and such cabaret license may in the discretion of the city council be transferred to the new agent upon the payment of the prescribed fee. (Ord. 6363 §12, 2002; Prior code §15.170 B).

5.26.050 License--Revocation--Suspension--Appeal. Any license issued hereunder may be revoked or suspended by the city clerk upon administrative determination that the licensee has failed or refused to comply with the provisions of this chapter, for disorderly or illegal conduct on the premises, or for violation of the rules, regulations, or laws governing or applying to cabaret premises or premises licensed to sell intoxicating liquor. Appeal from the afore stated determination shall be made to the administrative review board under the procedures specified in ch. 1.06. Appeal shall stay the contested administrative determination pending decision by the board. (Ord. 6572 §3, 2005; Ord. 5954 §2, 1999; Prior code §15.170 C).

5.26.060 License--Application. No license shall be granted hereunder unless the person or corporation desiring the same shall first have paid the fee therefor and shall have filed with the city clerk a written application therefor under oath and on forms to be furnished by the city clerk, designating the kind of license applied for, the address and description of the premises for which the license is desired, and such other information as may be required to insure compliance with this chapter, state law or such as may be required by the city council. No license shall be granted under this chapter, however, unless the city council shall, by vote of a majority of the council present and voting at any regular or special meeting called for such purpose, have authorized the same. (Prior code §15.170 D).

5.26.070 License--Conditions. No class A or class B cabaret shall be licensed, maintained or operated except in conformity with the following regulations; excepting the provisions of Section 5.26.020 which apply only to class A cabarets. Violation of any of the following conditions shall be cause for suspension or revocation of such license:

A. Efficient means shall be employed to prevent the ordinary sounds of music, dancing, singing or entertainment within the cabaret from being heard on adjoining premises or on the public street consistent with the dictates of s. 9.56.070. Any entertainment or exhibitions held under this chapter must be conducted within the enclosed building of the licensed establishment unless otherwise approved by the city council.

B. All cabarets shall be reasonably lighted at all times when any patrons shall be therein, and at all times when the same is open to the public.

C. Every cabaret shall be closed to the public and no patron shall be therein at times the licensed establishment is required to be closed pursuant to s. 125.68(4)(c), Wis. Stats.

D. No minor under the age of eighteen years shall be permitted in any cabaret unless accompanied by parent or guardian.

E. Upon request, the licensee shall provide the name, address and date of birth of each entertainer who is to perform in a dance ballet, or floor show where the majority of the performer's act consists of dancing, to the city police department or any police officer thereof.

F. The licensee shall ensure that no entertainer or exhibitioner violates any provision of chapter 8.07.

G. No person who is intoxicated shall be served with any beverage containing alcohol or be permitted to dance in any cabaret.

H. Every cabaret shall be provided with separate isolated toilets and lavatory facilities for each sex, which shall be constructed and maintained in a sanitary condition in conformance with the laws of the state, the provisions of this chapter, and regulations of the health department.

I. There shall be in every cabaret premises not less than two doors for exits leading to the outside, each not less than three feet in width and opening outward.

J. The sale, service or consumption of commodities for which licenses are otherwise required shall not be permitted in any cabaret unless the proper license or licenses therefor are obtained for the premises in the name of the owner or manager of such cabaret.

K. As a condition of licensing, the licensee shall permit free and unobstructed access to the premises when licensed premises are open to the public, by police officers while acting on official duty. (Ord. 5954 §3, 1999; Ord. 3733 §§1, 2, 3(part), 1977; prior code §15.170 E).

5.26.080 Civic center exemption. This chapter shall not apply to the Eau Claire Municipal Civic Center, 210 South Farwell Street. (Ord. 3615 §2, 1976).

5.26.090 Violation--Penalty. Any person who violates any provision of this chapter shall, upon conviction, be subject to a forfeiture of not exceeding one hundred dollars for each offense. (Ord. 3733 §3(part), 1977).

Chapter 5.28

ALCOHOL BEVERAGES

Sections:

I. General Provisions

5.28.010 State statutes adopted.
5.28.020 License application--Inspection and report.
5.28.025 Application filing dates.
5.28.030 General license regulations.
5.28.032 "Class B" license for sale of intoxicating liquor.
5.28.033 Temporary Class "B" License Issuance.
5.28.035 Presence of underage persons on premise.
5.28.037 Sidewalk cafes in the downtown and Water Street areas.
5.28.040 License granting.
5.28.060 License--Revocation upon abandonment of premises.
5.28.070 License--Display on premises.
5.28.080 Health and sanitary requirements.
5.28.090 Operator's license.
5.28.095 Mandatory operator's training.

II. Fermented Malt Beverages

5.28.100 License fees.

III. Intoxicating Liquor

5.28.110 License fees.

IV. Penalty

5.28.130 Penalty.

5.28.010 State statutes adopted. A. The provisions of Chapter 125 of the Wisconsin Statutes, insofar as the same are applicable, are made a part of this chapter with the same force and effect as those set forth verbatim herein. Any amendments to that Chapter shall be adopted by

reference as if they were fully set forth herein. (Ord. 5096, 1990; Ord. 5064, §2, 1990; Ord. 4796 §1, 1987; Ord. 4481 §1, 1984).

5.28.020 License application--Inspection and report. The city clerk shall notify the chief of police, health officer, chief of the fire department and building inspector of an application for a license to be issued under this chapter, and these officials shall inspect, or cause to be inspected each application and the premises to determine whether the applicant and the premises sought to be licensed comply with the regulations, ordinances and laws applicable thereto. These officials shall furnish to the city council in writing the information derived from such investigation. The premises may be reinspected at the time of renewal of the license. A written report of the inspection shall be provided to city council. (Ord. 7030 §2, 2012; Ord. 4481 §1, 1984).

5.28.025 Application filing dates. All applications for licenses issued under section 125.26(6) of the Wisconsin Statutes shall be filed with the clerk of the city of Eau Claire at least 5 days prior to the granting of the license. The city council may waive this requirement under circumstances it deems sufficient. (Ord. 4854, 1988; Ord. 4737, 1987).

5.28.030 General license regulations. A. No alcohol license available under this chapter shall be issued for premises, the main entrance of which is less than 300 feet from the main entrance of any established public school, parochial school, hospital or church, without council approval. Such distance shall be measured by the shortest route along the highway from the closest point of the main entrance of said school, church or hospital, to the main entrance to such premises.

B. Paragraph A shall not apply to bona fide clubs, hotels or premises with restaurant capacity and facilities to serve more than 50 seated patrons.

C. Each premises for which a license is granted under this chapter must be connected with and have at all times, city water and sewage facilities and must be properly lighted and ventilated.

D. Closing hours for Class "B" (licensed taverns) shall conform with the requirements of section 125.32(3) of the Wisconsin Statutes.

E. No premises for which a Class "A" or a "Class A" Retailers License is issued shall be permitted to remain open for the sale of any alcoholic beverages between the hours of 9:00 p.m. and 8:00 a.m., including the sale of alcohol for carry-out at those premises for which a Class “B” or a “Class B” license has been issued that is primarily operating as a grocery store, as provided in 5.28.032.

F. All alcohol beverages shall be sold, dispensed, given away or furnished entirely within and upon the licensed premises, and no alcohol beverages shall be sold, dispensed, given away or furnished to any person not upon the licensed premises, by means of a drive-up or walk-up window or similar facility.

G. Between the hours of 12:00 midnight and 8:00 a.m., no person may carry out, nor may any person permit the carry-out from any establishment licensed under this chapter, any alcohol beverages for consumption away from the premises.

H. No "Class A" liquor store license available under this chapter shall be issued for any premise which is located less than 500 feet from an already existing "Class A" liquor store licensed under this chapter. 500 feet shall be measured from the closest entrance of one premise to the closest entrance of the other premise.

I. All alcohol beverages on a "Class A" licensed premise shall be sold only on said premises by employees of the licensee.

J. Each "Class A" licensed premise shall be effectively separated from any unlicensed premise in the manner as approved or prescribed by the city council.

K. Between the hours of 9:00 p.m. and 8:00 a.m., or on Sundays before 12:00 noon, no person may purchase or carry out, nor may any person sell or permit the carry out from any establishment licensed under this chapter, any receptacle containing fermented malt beverages in excess of 1 gallon in volume. (Ord. 7440, §1 2021; Ord. 5433, 1994; Ord. 5306, 1993; Ord. 5089, 1990; Ord. 4796 §2, 1987; Ord. 4786 §§1, 5, 1987; Ord. 4481 §1, 1984).

5.28.032 "Class B" license for sale of intoxicating liquor. A. The City Council finds that excessive consumption of alcohol is one of the primary issues affecting the health and safety

of the Eau Claire community, one that is fueled by ease of access to intoxicants and alcohol of any kind. Excessive consumption of alcohol is found to be limited by restricting the hours in which large quantities of alcohol may be purchased at any one time. This section is intended to limit such deleterious effects by providing for the health, safety, and welfare of the public and creating a safer community.

B. A retail "Class B" license authorizes the sale of intoxicating liquor, wine and fermented malt beerages to be consumed by the glass only on the premises where sold and also authorizes the sale of intoxicating liquor in the original package or container, in multiples not to exceed 4 liters at any one time, and to be consumed off the premises where sold. Wine may be sold for consumption off the premises in the original package or otherwise in any quantity.

C. This subsection shall apply to all licensed premises that operate primarily as a grocery store, meaning that 65% or greater of sales are classified as grocery or alcohol for off-premise consumption and shall supersede subsection B. above and 5.28.030.G. Such establishments may sell intoxicating liquor, fermented malt beverage, and wine in any quantity, in the original package or container to be consumed off the premises, which shall only be sold between the hours of 8:00 a.m. and 9:00 p.m. (Ord. 7440, §2 2021; Ord. 4781, 1987).

5.28.033 Temporary Class "B" License Issuance. City council shall issue all temporary Class "B" licenses, except that the director of community services and the chief of police or their designees are hereby designated pursuant to section 125.26 of the Wisconsin Statutes to issue such licenses in conjunction with a special event permit issued in accordance with the administrative approval process in s. 9.59.030.B. (Ord. 7202, 2016; Ord. 7161 §5, 2015).

5.28.035 Presence of underage persons on premise. A. Underage persons who are not accompanied by a parent, legal guardian or spouse who has attained the legal drinking age may enter and remain in a room on a Class "B" or "Class B" licensed premise which is separate from any room where alcohol beverages are sold or served if:

1. No alcohol beverages are furnished or consumed by any person in the room where the underage person is present, and

2. The Class "B" or "Class B" licensee obtains a written authorization from the Police Department of the City of Eau Claire permitting underage persons to be present on a specified date set forth in the authorization. Prior to the issuance of any authorization, the Police Department shall make a determination that the presence of underage persons on the licensed premises will not endanger their health, welfare or safety or that of other members of the community. Licensees shall obtain a separate authorization for each date on which underage persons will be present on the premises.

B. The presence of underage persons on a licensed premise authorized by subsection A. above or s. 125.07(3)(a)10 of the Wisconsin Statutes shall be subject to the following restrictions and requirements:

1. Each application must be received at least five business days prior to the date requested.

2. During the period of time when underage persons are permitted on premise, persons entering the premise or that portion of the licensed premise shall be restricted to those individuals between the ages of 16 and 20, inclusive. This restriction shall not apply to parents, guardians, employees of the establishment, police officers, city officials or anyone else authorized by the licensee to enter said premises.

3. No person shall be admitted to a licensed premise during the period of authorization if it is determined that that person has been drinking alcohol beverages or been using any other drugs not prescribed and taken in accordance with instructions from a licensed physician.

4. People attending events authorized under subsection A. must be provided with restroom facilities separate from those being used by individuals present on other portions of the licensed premise where alcohol beverages are being served, sold or consumed.

5. There shall be at least one chaperon of each sex present during authorized time periods. Chaperons shall be at least 21 years of age. Service personnel shall not qualify as chaperons.

6. The Police Department may refuse to authorize underage presence on premises under subsection A. if the following has occurred:

a. The applicant has violated any of the provisions of this section.

b. The applicant has failed to comply with the information contained on a prior application.

c. Laws of the City of Eau Claire or the State of Wisconsin were violated during a previously authorized date of operation.

d. Events have taken place on a prior authorized date or dates which make the Police Department unable to further certify that the presence of underage persons on the licensed premise will not endanger their health, welfare, or safety or that of other members of the community. (Ord. 5215, 1992; Ord. 4663, 1986).

5.28.037 Sidewalk cafes in the downtown and Water Street areas. A. Introduction and definitions. No holder of a "Class B", Class "B", and/or "Class C" license may operate under said license(s) in a sidewalk cafe, as defined in s. 13.12.062 B., in the downtown and Water Street areas, without first having obtained administrative approval, subject to the conditions of this section. Administrative approval under this section shall result in the sidewalk cafe becoming a temporary seasonal part of the licensed premise, concurrent with and conditioned upon a valid sidewalk café permit, with the sidewalk cafe also being subject to all state and city laws, rules, regulations, and lawful order governing "Class B", Class "B", or "Class C" licenses.

Administrative approval shall consist of issuance of a temporary seasonal license expansion by the city clerk upon applicant meeting all requirements herein and review and no objection from the City of Eau Claire's License Review Committee.

B. Application. A request for a temporary expansion of the licensed premises to include a sidewalk cafe shall be made in writing to the city clerk. The request shall also include a completed application for the sidewalk cafe and site plan per s. 13.12.062 D.

C. Requirements. Sidewalk cafes approved under this section shall be subject to the following requirements. City council may impose additional requirements at its discretion.

1. The service and consumption of alcohol beverages in the sidewalk cafe shall be limited to the hours of operation of the sidewalk cafe per s. 13.12.062 F. 13.

2. Alcohol beverages shall only be served to patrons of the establishment by a server in the sidewalk cafe. There shall be no carry-out or carry-in of alcohol beverages by the patron to and from the sidewalk cafe.

3. Patrons of the establishment in the sidewalk cafe shall remain seated at the table when consuming alcohol beverages.

4. Alcohol beverages shall only be served to patrons of the establishment with food service in the sidewalk cafe.

5. Compliance with all city and state alcohol related laws, rules, and regulations.

D. Responsibility of licensee. The license holder shall, in addition to all other requirements of the law, the city liquor license, and this section, take reasonable steps to ensure that alcohol beverages are consumed only by patrons of the establishment who are of legal drinking age, and not by passersby or persons who are not of age or who are obviously intoxicated. Reasonable steps may include, but not be limited to, the use of portable barriers or fences, supervision of the outside area by security and staff personnel, or surveillance electronic monitors. Failure to take reasonable steps and use them at all times in the sidewalk cafe is grounds for suspension or revocation of the sidewalk cafe permit under s. 13.12.062 I.

E. Responsibility of patrons. No person shall leave the sidewalk cafe area listed in the permit with an alcohol beverage. Any person doing so shall be in violation of city ordinance s. 9.52.030 prohibiting the consumption of alcohol or possession of open containers on streets.

F. Suspension or revocation. In the event a sidewalk cafe permit is suspended or revoked under s. 13.12.062 I., service of alcohol in the sidewalk cafe area shall not be permitted.

G. Approval by city council. Administrative approval of the sidewalk cafe as part of the licensed premise shall not be granted or renewed under this section without a valid sidewalk cafe permit and compliance with all of the above requirements. City Council approval shall be required for the issuance or renewal of any expansion if the License Review Committee objects to the license expansion, additional requirements are deemed necessary by License Review Committee and not

agreed to by applicant, repeated noncompliance with any of the requirements of this code or s. 13.12.062, or if any property owners within 100 feet of the proposed license expansion files a written objection with the city clerk prior to issuance or renewal. (Ord. 7378, §2 2020; Ord. 6587, 2005).

5.28.040 License granting. The city council may, upon granting a license under this chapter, impose conditions upon the license which limit or restrict operations under the license. If any licensee shall fail or neglect to meet the requirements imposed by such restrictions and regulations, the license may be suspended or revoked, pursuant to s. 125.12, Wisconsin Statutes. Upon the approval of the license application by the city council, the city clerk shall upon the payment to the city treasurer of the license fee herein provided and upon verification that the applicant is in compliance with applicable laws, rules and regulations, issue to the applicant a license as provided in the chapter. (Ord. 5419 §1, 1994; Ord. 5352 §2, 1993; Ord. 4481 §1, 1984).

5.28.060 License--Revocation upon abandonment of premises. The alcohol beverage license for any premises which is abandoned, as defined herein, shall be subject to revocation by the city council as provided in section 125.12, Wisconsin Statutes. In this section, "abandoned" shall mean a continuing refusal or failure of the licensee to use the license for the purpose or purposes for which the license was granted by the city council for a period of 90 days or more. (Ord. 6159, 2001; Ord. 6112, 2000; Ord. 5432, 1994; Ord. 5419 §2, 1994; Ord. 4481, 1984).

5.28.070 License--Display on premises. Every person licensed in accordance with the provisions of this chapter shall immediately post such license and keep the same posted while in force in a conspicuous place in the room or place where said beverages are drawn or removed for service or sale. It is unlawful for any person to post such license or to be permitted to post it upon premises other than those mentioned in the application, except on approved transfer of location, or to knowingly deface, alter or destroy such license. Whenever a license shall be lost or destroyed a duplicate license in lieu thereof under the original application may be issued by the city clerk when satisfied as to the facts relating thereto. (Ord. 4481, 1984).

5.28.080 Health and sanitary requirements. Each licensed premises shall be conducted in a sanitary manner and shall be a safe and proper place for the purpose for which used. The board of health of the city is authorized and empowered to make reason-able and general rules for the sanitation of all places of business possessing a license under this chapter. Such rules or regulations may be classified and made applicable according to the class of business conducted. All such rules and regulations shall have the same force as this chapter and infraction thereof may be punished as a violation of this chapter. (Ord. 4481, 1984).

5.28.090 Operator's license. A. A beverage operator's license as provided by Chapter 125 of the Wisconsin Statutes may be granted by the city council upon the payment of a fee as stated in the City of Eau Claire Fees and Licenses Schedule. A written application provided by the city clerk shall be filed with the city clerk's office and completed in full. The application shall be referred to the chief of police for a background report on the applicant and a recommendation on the granting of the license. A person must be 18 years of age in order to be eligible for an operator's license.

B. The city council shall grant an operator's license pursuant to this section to such applicants per the determination of the city clerk or the administrative review board under ch. 1.06. Said license shall expire on the second June 30th following the date of issuance. The license fee under this section shall be paid to the city treasurer. Each operator's license shall be posted in a conspicuous place in the room or place where alcohol beverages are poured, served, consumed or removed for service or sale.

C. The city clerk or the city clerk's designee shall issue a provisional beverage operator's license subject to the following conditions:

1. A provisional license may be issued only to a person who has applied for a regular beverage operator's license as provided by subsections A and B of this section.

2. A provisional license may not be issued to any person who has been denied a regular beverage operator's license by the city clerk or administrative review board.

3. A provisional license shall expire 60 days after its date of issuance, or when a regular beverage operator's license is granted by the council and issued to the holder, whichever is sooner.

4. The fee for a provisional beverage operator's license shall be included in the fee paid for an operator's license under subsection A. of this section.

5. Prior to issuance of the provisional license, the clerk or that person's designee shall provide the police department with a copy of the application and the police department shall then make a background check on the license holder and report the results and make a recommendation to the clerk's office.

6. The city clerk or that person's designee, upon recommendation of the chief of police, may deny or revoke the provisional license if it is discovered that the holder of the license made a false statement on the application.

7. The city clerk or that person's designee, upon recommendation of the chief of police, may deny or revoke the provisional license of any person when it is determined that that person's criminal or civil conviction record substantially relates to the duties and circumstances of a beverage operator's position.

8. Any person whose provisional license is denied or revoked by the clerk shall have the right to appeal that denial or revocation to the administrative review board under ch. 1.06.

9. No person shall be issued more than 3 provisional licenses in any 2-year period.

D. A regular beverage operator's license issued hereunder may be revoked or suspended by the city clerk for reasons provided under subsections C. 6. or C. 7. of this section. An appeal of said revocation or suspension may be made under ch. 1.06. Appeal shall stay the contested administrative determination pending decision by the board. (Ord. 6572 §4, 2005; Ord. 6363 §13, 2002; Ord. 6233 §3, 2001; Ord. 5687, 1997; Ord. 5586, 1996; Ord. 4962, 1989; Ord. 4789 §7, 1987; Ord 4764, 1987; Ord. 4676, 1986; Ord. 4525 §1, 1984; Ord. 4481, 1984).

5.28.095 Mandatory operator's training. A. All persons applying for, or presently licensed as beverage operators in any establishment licensed under this chapter, shall complete a mandatory alcohol awareness and training program approved by the city council. The completion of such course shall be pursuant to the following schedule:

1. Individuals applying for a license prior to June 30, 1985 may be licensed without completion of the approved program. However, no new licenses or license renewals shall be granted by the council or issued by the city clerk subsequent to June 30, 1985 unless the applicant shows to the satisfaction of the city clerk that he or she has completed the approved training program. Individuals who have been issued a provisional operator's license are exempt from this requirement. However, those individuals must complete the course within 60 days after the date of issuance of that provisional license.

B. Where application is made for a Class "A" or Class "B" license on behalf of a sole proprietorship, the sole proprietor shall successfully complete the program within the time stated. Where such application is made on behalf of a partnership, all partners shall successfully complete the program within the time stated. Where such application is made on behalf of a corporation, the registered agent shall successfully complete the program within the time stated.

C. A separate course program shall be established for those individuals performing or proposing to perform as operators in an establishment operating a Class "A" license. Any person who completes such a program shall have an appropriate endorsement recorded and placed on his or her license and shall be eligible as an operator only in establishments operating under a Class "A" license.

D. Participants in the approved training programs shall pay a tuition fee as stated in the City of Eau Claire Fees and Licenses Schedule. Changes in the curriculum, content or hours of the approved programs may be made without consent of the city council, provided that such changes are approved by the chief of police and the city attorney's office. (Ord. 6363 §13, 2002; Ord. 6233 §3, 2001; Ord. 4525 §2, 1984; Ord. 4512, 1984; Ord. 4498, 1984; Ord. 4481, 1984).

II. Fermented Malt Beverages

5.28.100 License fees. License fees for the sale or distribution of fermented malt beverages

shall be as stated in the City of Eau Claire Fees and Licenses Schedule. (Ord. 6363 §13, 2002; Ord. 6233 §3, 2001; Ord. 4487, 1984; Ord. 4481, 1984).

III. Intoxicating Liquor

5.28.110 License fees. License fees for the sale or distribution of intoxicating liquor shall be as stated in the City of Eau Claire Fees and Licenses Schedule. (Ord. 6363 §13, 2002; Ord. 6233 §3, 2001; Ord. 6108, 2000; Ord. 5784, 1997; Ord. 4789 §7, 1987; Ord. 4786 §2, 1987; Ord. 4481, 1984).

IV. Penalty

5.28.130 Penalty. Any person who violates any of the provisions of this chapter shall, upon conviction: A. Forfeit the sum provided by Chapter 125 of the Wisconsin Statutes for a violation of any provision of that chapter adopted by reference herein.

B. Forfeit not more than $500 for violation of any other provision of this chapter, or violation of any condition included on a license application or upon the license, and in default of the payment thereof, be imprisoned in the county jail for a period not to exceed 90 days.

C. Any license issued under the provisions of this chapter shall be subject to suspension or revocation as provided by Chapter 125 of the Wisconsin Statutes. (Ord. 5352 §3, 1993; Ord. 4481, 1984).

Chapter 5.34

DIRECT SELLERS

Sections:

5.34.010 Registration Required.
5.34.020 Definitions.
5.34.025 Shows and exhibitions.
5.34.030 Exemptions.
5.34.040 Registration.
5.34.050 Investigation.
5.34.060 Appeal.
5.34.070 Regulation of Direct Sellers.
5.34.080 Records.
5.34.090 Revocation of Registration--Appeal.
5.34.100 Penalty.
5.34.110 Severance Clause.

5.34.010 Registration Required. It shall be unlawful for any direct seller to engage in direct sales within the city of Eau Claire without being registered for that purpose as provided herein. (Ord. 4394 §1, 1983).

5.34.020 Definitions. In this ordinance: A. "Direct Seller" means any individual who, for him/herself, or for a partnership, association or corporation, sells goods or services, or takes sales orders for the later delivery of goods or services, at any location other than the permanent business place or residence of said individual, partnership, association or corporation, and shall include, but not be limited to, peddlers, solicitors and transient merchants. The sale of goods or services includes donations required by the direct seller for the retention of goods or services by a donor or prospective customer.

B. "Permanent merchant" means a direct seller who, for at least one year prior to the consideration of the application of this ordinance to said merchant, a) has continuously operated an established place of business in this city, or b) has continuously resided in this city and now does

business from his/her residence. The term shall also include a merchant conducting business during a holiday season in the city for a continuous period of 8 weeks or longer.

C. "Goods" shall include personal property of any kind, and shall include goods provided incidental to services offered or sold.

D. "Charitable organization" shall include any benevolent, philanthropic, patriotic or eleemosynary person, partnership, association or corporation, or one purporting to be such.

E. "Clerk" shall mean the city clerk.

F. "Services" shall include but not be limited to any act, work, assistance, advice or consultation provided for another for pay or other consideration. (Ord. 4980, 1989; Ord. 4394 §1, 1983).

5.34.025 Shows and exhibitions. An individual exhibitor offering goods for sale at a show or exhibition shall not be deemed to be a direct seller if the sponsor of the show or exhibition registers with the city clerk as provided in this chapter and files with the clerk a list of the names and addresses of exhibitors. (Ord. 4547, 1985).

5.34.030 Exemptions. The following shall be exempt from all provisions of this ordinance:

A. Any person delivering newspapers, fuel, dairy products or bakery goods to regular customers on established routes;

B. Any person selling goods at wholesale to dealers in such goods;

C. Any person selling agricultural products which such person has grown;

D. Any permanent merchant or employee thereof who takes orders away from the established place of business for goods regularly offered for sale by such merchant within this county and who delivers such goods in their regular course of business;

E. Any person who has an established place of business where the goods being sold are offered for sale on a regular basis, and in which the buyer has initiated contact with, and specifically requested a home visit by, said person;

F. Any person who has had, or one who represents a company which has had, a prior business transaction, such as a prior sale or credit arrangement, with the prospective customer;

G. Any person holding a sale required by statute or by order of any court and any person conducting a bona fide auction sale pursuant to law;

H. Any employee, officer or agent of a charitable organization who engages in direct sales for or on behalf of said organization, provided that there is submitted to the clerk proof that such charitable organization is registered under sec. 440.41, Stats. Any charitable organization not registered under sec. 440.41, Stats., or which is exempt from that statute's registration requirements, shall be required to register under this ordinance;

I. Any person who claims to be a permanent merchant, but against whom complaint has been made to the clerk that such person is a transient merchant; provided that there is submitted to the clerk, proof that such person has leased for at least one year, or purchased, the premises from which he/she is conducting business, or proof that such person has conducted such business in this city for at least one year prior to the date complaint was made;

J. Any person who acts as a direct seller at a private, non-public premise, provided that another person, corporation, partnership, association or other entity has properly registered with the city of Eau Claire pursuant to the terms of this chapter, and where the "license" of such registrant is posted in a place on the premises clearly visible to the public. (Ord. 4455 §1, 1984; Ord. 4394 §1, 1983).

5.34.040 Registration. A. Applicants for registration must complete and return to the clerk a registration form furnished by the clerk which shall require the following information:

1. Name, permanent address and telephone number, and temporary address, if any;
2. Age, height, weight, color of hair and eyes;
3. Name, address and telephone number of the person, firm, association or corporation that the direct seller represents or is employed by, or whose merchandise is being sold;
4. Temporary address and telephone number from which business will be conducted, if any;

5. Nature of business to be conducted and a brief description of the goods offered, and any services offered;

6. Proposed method of delivery of goods, if applicable;

7. Make, model and license number of any vehicle to be used by applicant in the conduct of his/her business;

8. Last cities, villages, towns, not to exceed three, where applicant conducted similar business;

9. Place where applicant can be contacted for at least seven days after leaving this city;

10. Statement as to whether applicant has been convicted of any crime or ordinance violation related to applicant's transient merchant business within the last five years; the nature of the offense and the place of conviction.

B. Applicants shall present to the clerk for examination:

1. A driver's license or some other proof of identity as may be reasonably required;

2. A state certificate of examination and approval from the sealer of weights and measures where applicant's business requires use of weighing and measuring devices approved by state authorities;

3. A state health officer's certificate where applicant's business involves the handling of food or clothing and is required to be certified under state law; such certificate to state that applicant is apparently free from any contagious or infectious disease, dated not more than 90 days prior to the date the application for license is made.

C. At the time the registration is returned, a fee as stated in the City of Eau Claire Fees and Licenses Schedule shall be paid to the clerk to cover the cost of processing said registration and other incidental costs. The applicant shall sign a statement appointing the clerk his/her agent to accept service of process in any civil action brought against the applicant arising out of any sale or service performed by the applicant in connection with the direct sales activities of the applicant, in the event the applicant cannot, after reasonable effort, be served personally. Upon payment of said fee and the signing of said statement, the clerk shall register the applicant as a direct seller and date the entry. Said registration shall be valid for a period of seven days from the date of entry, subject to subsequent refusal as provided in Sec. 5.34.050 (B) below.

D. At the time of registration, the clerk shall issue a numbered registration form entitled "license" to each applicant. If the applicant's business is to be conducted at only one location, said license must be displayed at all times such business is conducted in a place clearly visible to the public. All applicants who will conduct their business from place to place in the city shall also be issued a numbered paper license which must be displayed on their person in a place which is clearly visible to the public, during all times that they conduct such business. (Ord. 6363 §14, 2002; Ord. 4455 §§2, 3, 1984; Ord. 4394, 1983).

5.34.050 Investigation. A. Upon receipt of each application, the clerk may refer it immediately to the chief of police who may make and complete an investigation of the statements made in such registration.

B. The clerk shall refuse to register the applicant if it is determined, pursuant to the investigation above, that: the application contains any material omission or materially inaccurate statement; complaints of a material nature have been received against the applicant by authorities in the last cities, villages and towns, not exceeding three, in which the applicant conducted similar business; the applicant was convicted of a crime, statutory violation or ordinance violation within the last five years, the nature of which is directly related to the applicant's fitness to engage in direct selling; the applicant failed to comply with any applicable provision of Sec. 5.34.040 B. above; the applicant has failed to provide the clerk with a printed copy of the form required by Sec. 423.203 of the Wisconsin Statutes where necessary; or the applicant has failed to provide the clerk with the Wisconsin Department of Revenue tax number where applicable. (Ord. 4639, 1986; Ord. 4394 §1, 1983).

5.34.060 Appeal. Any person denied registration may appeal the denial to the administrative review board under the procedures specified in ch. 1.06. (Ord. 6572 §5, 2005; Ord. 4394 §1, 1983).

5.34.070 Regulation of Direct Sellers. A. Prohibited Practices.

1. A direct seller shall be prohibited from calling at any dwelling or other place between the hours of 8:00 p.m. and 9:00 a.m. except by appointment; calling at any dwelling or other place where a sign is displayed bearing the words "No Peddlers", "No Solicitors" or words of similar meaning; calling at the rear door of any dwelling place; or remaining on any premises after being asked to leave by the owner, occupant or other person having authority over such premises.

2. A direct seller shall not misrepresent or make false, deceptive or misleading statements concerning the quality, quantity or character of any goods offered for sale, the purpose of his/her visit, his/her identity or the identity of the organization he/she represents. A charitable organization direct seller shall specifically disclose what portion of the sale price of goods being offered will actually be used for the charitable purpose for which the organization is soliciting. Said portion shall be expressed as a percentage of the sale price of the goods.

3. No direct seller shall impede the free use of sidewalks and streets by pedestrians and vehicles. Where sales are made from vehicles, all traffic and parking regulations shall be observed.

4. No direct seller shall make any loud noises or use any sound amplifying device to attract customers if the noise produced is capable of being plainly heard outside a one-hundred foot radius of the source.

5. No direct seller shall allow rubbish or litter to accumulate in or around the area in which he/she is conducting business.

6. Upon demand from any police officer or other city official, a direct seller shall promptly provide his/her license for examination by that person.

7. The license number issued to a direct seller must appear in a clearly visible place in all printed or written advertisement used by the direct seller to promote his/her business. Such number shall appear at the end of the following phrase: "City of Eau Claire license no. _____." All radio or television advertisement by a direct seller must also contain either a verbal or a written statement that the advertiser is licensed by the city of Eau Claire, and must include that direct seller's number.

B. Disclosure Requirements.

1. After the initial greeting and before any other statement is made to a prospective customer, a direct seller shall expressly disclose his/her name, the name of the company or organization he/she is affiliated with, if any, and the identity of goods or services he/she offers to sell.

2. If any sale of goods is made by a direct seller, or any sales order for the later delivery of goods is taken by the seller, the buyer shall have the right to cancel said transaction, if it involves the extension of credit or is a cash transaction of more than $25, in accordance with the procedure as set forth in sec. 423.203, Stats.; the seller shall give the buyer two copies of a typed or printed notice of that fact. Such notice shall conform to the requirements of secs. 423.203 (1)(a)(b) and (c), (2) and (3), Stats.

3. If the direct seller takes a sales order for the later delivery of goods, he/she shall, at the time the order is taken, provide the amount paid in advance whether full, partial or no advance payment is made, the name, address and telephone number of the seller, the delivery or performance date and whether a guarantee or warranty is provided and, if so, the terms thereof. (Ord. 4455 §§4, 5, 6, 1984; Ord. 4394 §1, 1983).

5.34.080 Records. The chief of police shall report to the clerk all convictions for violation of this ordinance and the clerk shall note any such violation on the record of the registrant convicted. (Ord. 4394 §1, 1983).

5.34.090 Revocation of Registration--Appeal. A. Registration may be revoked by the city clerk, upon administrative determination that the registrant made any material omission or materially inaccurate statement in the application for registration, made any fraudulent, false, deceptive or misleading statement or representation in the course of engaging in direct sales, violated any provision of this ordinance or was convicted of any crime or ordinance or statutory violation which is directly related to the registrant's fitness to engage in direct selling.

B. Appeal from the afore stated determination shall be made to the administrative review board under the procedures specified in ch. 1.06. Appeal shall stay the contested administrative

determination pending decision by the board. (Ord. 6572 §5, 2005; Ord. 6572 §5, 2005; Ord. 4394 §1, 1983).

5.34.100 Penalty. Any person convicted of violating any provisions of this ordinance shall forfeit not less than ten dollars nor more than one hundred dollars for each violation plus costs of prosecution. Each violation shall constitute a separate offense. (Ord. 4394 §1, 1983).

5.34.110 Severance Clause. The provisions of this ordinance are declared to be severable, and if any section, sentence, clause or phrase of this ordinance shall for any reason be held to be invalid or unconstitutional, such decision shall not affect the validity of the remaining sections, sentences, clauses and phrases of this ordinance; they shall remain in effect, it being the legislative intent that this ordinance shall stand notwithstanding the invalidity of any part. (Ord. 4394 §1, 1983).

Chapter 5.42

POOL HALLS, BILLIARD HALLS AND BOWLING ALLEYS

Sections:

5.42.010 License--Required.
5.42.020 Application--Procedure.
5.42.030 License--Fee.
5.42.035 Application--Qualifications.
5.42.040 Premises--Regulations compliance.
5.42.050 Inspection of pool halls.
5.42.055 Closing hours.
5.42.060 Minors.
5.42.065 License--Revocation--Suspension--Appeal.
5.42.070 Violation--Penalty.

5.42.010 License--Required. It is unlawful for any person, firm or corporation to maintain or carry on any public pool room, billiard hall or other place of any name whatever in which billiard or pool tables kept for gain, or other kindred tables or bowling alleys are kept for gain, within this city, unless such person, firm or corporation has obtained a license therefor as provided in this chapter. (Prior code §14.33(a)).

5.42.020 Application--Procedure. A. Every person, firm or corporation keeping and maintaining billiard halls, pool rooms or bowling alleys in this city shall make written application for a license therefor to the city clerk and before the license is issued, shall pay to the city treasurer, for the use of the city, a license fee as provided in Section 5.42.030.

B. The application shall be presented to the city clerk, shall be issued by the city clerk and shall expire on the thirtieth day of June after issuance. (Ord. 4515 §9, 1984; Prior code §14.33(b), (c)).

5.42.030 License--Fee. The license fee shall be as stated in the City of Eau Claire Fees and Licenses Schedule for each billiard, pool or pocket billiard table, or other similar tables, and for each bowling alley the license shall be as stated in the City of Eau Claire Fees and Licenses Schedule for each bowling establishment. The license moneys shall be paid before a license is granted and such license shall not be transferable without the consent of the city council. (Ord. 6363 §15, 2002; Ord. 6111 §1, 2000; Ord. 5088, 1990; Ord. 4789 §8, 1987; Ord. 3951 §9, 1979; Prior code §14.33(d)).

5.42.035 Application--Qualifications. A. Applicants, whether an individual or agent of a corporation or other legal entity, may only be granted a license if they satisfy the following minimum requirements:

1. Applicant has not been convicted of any felony, misdemeanor or other offense, the circumstances of which substantially relate to the circumstances of the licensed activity, subject to Wis. Stats. sections 111.321, 111.322 and 111.335; and

2. Applicant is at least 18 years of age; and

3. Applicant has not violated this chapter within one year prior to the date of application. (Ord. 6111 §2, 2000).

5.42.040 Premises--Regulations compliance. No pool and billiard table license or bowling alley license shall be issued unless the premises comply with and conform to all ordinances, health regulations and fire regulations of the city, all laws, rules and regulations of the state, and all standards of the National Fire Protection Association applicable to such premises. (Copies of which said standards are by reference made a part hereof and which are on file in the office of the city clerk.) (Prior code §14.33(e)).

5.42.050 Inspection of pool halls. During the hours the pool hall is open for business, entrance and exit doors, and all interior doors, excepting storeroom, stock and office doors on the licensed premises shall be kept unlocked to permit ready inspection by the police or city-county health departments. (Ord. 6111 §3, 2000; Prior code §14.33 (f)).

5.42.055 Closing hours. No pool or billiard hall licensed under this chapter shall operate or keep open said premise between the hours of 12:00 midnight and 6:00 a.m., except on Saturdays, Sundays and legal holidays, when the hours of closure shall be between 2:00 a.m. and 6:00 a.m. (Ord. 6111 §4, 2000).

5.42.060 Minors. No pool or billiard hall licensed under this chapter shall allow or in any manner permit any person under the age of 16 years to enter or remain on the licensed premises, unless accompanied by parent or guardian. (Ord. 6111 §5, 2000).

5.42.065 License--Revocation--Suspension--Appeal. A. Licenses issued hereunder may be revoked or suspended by the city clerk upon administrative determination that the licensee used the licensed premises for any disorderly or illegal business purposes, violation of any law or regulation on or about the premises, or violation of any of the requirements of this chapter. Appeal from the afore stated determination shall be made to the administrative review board under the procedures specified in ch. 1.06. Appeal shall stay the contested administrative determination pending decision by the board.

B. License suspensions shall be for a time period set by the city clerk or the administrative review board. If a license is revoked, at least (6) months shall elapse before another license under the chapter may be granted to the same appellant or premises. (Ord. 6572 §6, 2005; Ord. 6111 §6, 2000).

5.42.070 Violation--Penalty. The provisions of Section 5.46.060 shall apply to violations of this chapter. (Prior code §14.36).

Chapter 5.46

THEATERS AND MOVIE HOUSES

Sections:

5.46.010 License--Required.
5.46.020 Theater, movie house--Defined.
5.46.030 License--Applications--Requirements.
5.46.040 License--Revocation--Suspension--Appeal.
5.46.050 License--Fee.

5.46.060 Violation--Penalty.

5.46.010 License--Required. No person, firm or corporation, either as owner, lessee, manager, officer or agent, shall keep, maintain, conduct or operate any theater or moving picture show house in the city without first obtaining a license therefor in the manner hereinafter provided. (Prior code §14.81).

5.46.020 Theater-movie house--Defined. "Theater or moving picture show house", as used in this chapter means any edifice, hall, building or part of building regularly or generally used or wholly devoted to the purposes of dramatic, operatic, vaudeville or other exhibition plays or performances for admission to which an entrance fee is paid, charged or received, or regularly or generally used or wholly devoted to the purpose of exhibiting moving pictures of any kind for admission to which an entrance fee is paid, charged or received, and shall exclude churches, schools and other halls used only occasionally for moving picture exhibitions, illustrated or other lectures, concerts or amateur theatricals or exhibitions. (Prior code §14.82).

5.46.030 License--Applications--Requirements. Applications for said licenses stating the location and the seating capacity of the premises shall be made to the city clerk, who shall be responsible for issuance of such license. No license shall be granted for any premises which does not conform in all respects to the laws of this state and the ordinances of the city and the standards of the National Fire Protection Association applying to such premises (copies of which said standards are by reference made a part hereof and which are on file in the office of the city clerk), and unless the same shall be safe and proper for the purposes for which it is to be used. (Ord. 4515 §10, 1984; Prior code §14.83).

5.46.040 License--Revocation--Suspension--Appeal. The city clerk shall have power and authority to revoke or suspend for cause, any license granted according to the provisions of this chapter, whenever in his judgment, the good order and welfare of the city will be promoted thereby, and whenever the licensed building does not conform in all respects to the laws of this state, standards of the National Fire Protection Association and the ordinances of the city applying to such edifices, and whenever the same shall be unsafe and improper for the purposes for which it is used. Appeal from the afore stated determination shall be made to the administrative review board under the procedures specified in ch. 1.06. Appeal shall stay the contested administrative determination pending decision by the board. (Ord. 6572 §7, 2005; Prior code §14.84).

5.46.050 License--Fee. The schedule of annual license fees under this chapter shall be as stated in the City of Eau Claire Fees and Licenses Schedule. (Ord. 6363 §16, 2002; Ord. 3951 §11, 1979; Prior code §14.85).

5.46.060 Violation--Penalty. Any person who violates any of the provisions of this chapter shall forfeit a penalty not exceeding two hundred dollars and the costs of prosecution for each and every offense, and in default of payment thereof, shall be committed to the county jail of Eau Claire County until such forfeiture and costs and expenses of prosecution are sooner paid. (Prior code §14.87).

Chapter 5.48

ROLLER SKATING RINKS

Sections:

5.48.010 Roller skating rink defined.
5.48.020 License--Required.
5.48.030 License--Fee.
5.48.040 License--Premises conformance--Display.

5.48.050 License--Revocation--Suspension--Appeal.
5.48.060 Premises standards.
5.48.070 Prohibitions.
5.48.090 Violation--Penalty.

5.48.010 Roller skating rink defined. "Public roller skating rink", as used in this chapter, means any hall, pavilion, room, place or space in which roller skating shall be permitted and for which admission can be had by payment of a fee or by the purchase, possession or presentation of a ticket or token, or at which a charge is made for caring for clothing or other property, or any other public roller skating rink to which the public generally may gain admission with or without payment of a fee. (Prior code §14.18).

5.48.020 License--Required. No persons, partnership, corporation, club or society shall conduct or operate any public roller skating rink as defined within the city without first procuring a license for such skating rink as provided in this chapter. Applications for such license shall be made to the city clerk who shall be responsible for issuing the license. (Ord. 4515 §11, 1984; Prior code §14.19(a)).

5.48.030 License--Fee. The annual fee for a license for conducting a public roller rink shall be as stated in the City of Eau Claire Fees and Licenses Schedule. The entire license fee shall be charged for every license for the whole or the fraction of a year and shall be paid when application is made for such license. If the license is denied, the fee shall be returned to the applicant. Every license granted shall expire on the thirtieth day of June next succeeding the date of its issue. All license fees paid under the provisions of this chapter shall be paid to the city treasurer. (Ord. 6363 §17, 2002; Prior code §14.19(b)).

5.48.040 License--Premises conformance--Display. No license for a public roller skating rink shall be issued unless such rink complies with and conforms to all ordinances, health regulations and fire regulations in the city; all laws, rules and regulations of the state; and standards of the National Fire Protection Association applicable to such public roller skating rink or the premises on which it is situated. (Copies of which said standards are by reference made a part hereof and which are on file in the office of the city clerk.) The skating rink shall be properly ventilated and operating with adequate toilet facilities and a safe, sanitary and proper place for the purpose for which it is to be used. Application for a license to conduct a public roller skating rink shall be in writing, filed with the city clerk and shall state the specific location where such public roller skating rink is to be conducted. When and if issued, such license shall be permanently and continuously displayed in the public roller skating rink so licensed and shall be subject to revocation as provided in Section 5.48.050. (Prior code §14.19 (c)).

5.48.050 License--Revocation--Suspension--Appeal. The license of any public roller skating rink may be revoked or suspended by the city clerk for disorderly conduct on the premises, for violation of any law or regulation, or for the violation of any of the provisions of this chapter. If at any time the license of a public roller skating rink shall be revoked or suspended, at least six months shall elapse before another license shall be granted to the same applicant for operation of a public roller skating rink. Appeal from the afore stated determination shall be made to the administrative review board under the procedures specified in ch. 1.06. Appeal shall stay the contested administrative determination pending decision by the board. (Ord. 6572 §8, 2005; Prior code §14.19(d)).

5.48.060 Premises--Standards. Every public roller skating rink shall be kept at all times in a clean and healthful and sanitary condition, and while any skating is held therein, the entire skating rink and all rooms connected therewith, and all stairways and passageways leading into such rink shall be kept open and well lighted at all times. (Prior code §14.20).

5.48.070 Prohibitions. No licensee who has been granted a license to conduct a public roller skating rink shall permit in such rink or on the premises on which such rink is situated:

A. The use of any fermented malt beverage, intoxicating liquor or controlled substance, as defined in Ch. 161, Wisconsin Statutes;

B. The presence of any person under the influence of fermented malt beverages, intoxicating liquor or controlled substance, as defined in Ch. 161, Wisconsin Statutes;

C. The presence of any person having in his possession or offering for sale, selling or giving away, any fermented malt beverage, liquor or controlled substance, as defined in Ch. 161, Wisconsin Statutes;

D. No loud or unusual noises shall be permitted upon the premises, nor shall any music be played unless such music shall be so controlled as not to constitute a nuisance. (Ord. 4276 §1, 1982; Prior code §14.21).

5.48.090 Violation--Penalty. The provisions of Section 5.46.060 shall apply to violations of this chapter. (Prior code §14.23).

Chapter 5.52

TREE TRIMMER

Sections:

5.52.010 License--Required--Procedure.
5.52.020 Licensee--Liability insurance.
5.52.030 License--Revocation--Suspension--Appeal.
5.52.040 Violation--Penalty.

5.52.010 License--Required--Procedure. A. No person shall engage in the business of tree trimming, tree removal or tree stump removal within the city without first obtaining a license to do so.

B. Applications for such license shall be on forms furnished by the city clerk and shall be accompanied by a license fee as stated in the City of Eau Claire Fees and Licenses Schedule.

C. The license shall be signed by the city clerk and shall have a term from July 1st of each year to the next succeeding June 30th. The license shall be nontransferable.

D. No license shall be issued to any applicant who has not successfully completed an appropriate examination, oral or written or both, as administered by the city forester. (Ord. 6363 §18, 2002; Ord. 6233 §4, 2001; Ord. 4967, 1989; Prior code §13.17 A).

5.52.020 Licensee--Liability insurance. A. No license shall be issued until the applicant has in full force and effect a public liability insurance policy, in a company authorized to do business in the state, in amounts of $250,000 for any one person injured or killed and a total of $500,000 for more than one person injured or killed, and $100,000 for the injury or destruction of any property of any person other than the licensee.

B. No licensee shall continue to engage in the business of tree trimming or tree or stump removal after the above required insurance has lapsed, expired or is otherwise not in full force and effect. (Ord. 4967, 1989; Ord. 4653 §1, 1986; Ord. 4503, 1984; Ord. 3516 §1, 1975; Prior code §13.17 B).

5.52.030 License--Revocation--Suspension--Appeal. Any license issued hereunder may be revoked or suspended by the city clerk or city forester upon administrative determination that the licensee has failed or refused to comply with the provisions of this chapter, or for violation of any city or state laws related to the business of tree trimming. Appeal from the afore stated determination shall be made to the administrative review board under the procedures specified in ch. 1.06. Appeal shall stay the contested administrative determination pending decision by the board. (Ord. 6572 §9, 2005; Ord. 4967, 1989; Prior code §13.17 C).

5.52.040 Violation--Penalty. Any person violating any provision of this chapter shall forfeit not less than $20 nor more than $200 and the costs of prosecution for each and every offense. Each day during which a violation occurs shall constitute a separate offense. In default of payment thereof, any person violating the provisions of this chapter shall be committed to the county jail for a period not to exceed 30 days. (Ord. 4967, 1989; Ord. 4650 §2, 1986; Prior code §13.18).

Chapter 5.54

VEHICLES FOR HIRE

Sections:

5.54.010 License--Required.
5.54.020 License--Issuance conditions--Fee.
5.54.030 License--Denial--Revocation--Suspension--Appeal.
5.54.040 Insurance coverage.
5.54.050 Vehicle identification.
5.54.060 Driver's license--Required.
5.54.070 License--Application.
5.54.080 License--Fee.
5.54.095 Exemptions.
5.54.100 Violation--Penalty.

5.54.010 License--Required. No person, firm or corporation shall for hire or reward transport passengers by means of a motor-driven vehicle within the city limits of Eau Claire, except as hereinafter provided. (Prior code §15.101(a)).

5.54.020 License--Issuance conditions--Fee. A. Each person, firm or corporation other than employees who, for hire or reward, engages in the business of carrying passengers in or on a motor-driven vehicle, shall pay an annual license fee as stated in the City of Eau Claire Fees and Licenses Schedule for each vehicle so to be operated, and any and all such persons, firms or corporations shall have and continually maintain a regularly established place of business; provided, however, no license shall be issued unless the applicant is a citizen of the United States, of good character and of the age of 18 years or upwards, or to a corporation organized under the laws of the state.

B. Licenses shall be granted for one year. Applications therefor shall be made on blanks to be provided by the city clerk and shall state:

1. The number of vehicles to be operated, the make and type of each motor car to be used, the horsepower, the factory number, the license number of each thereof, and the number of years the vehicle has been driven, with the seating capacity according to trade rating;

2. Whether applicant has been previously licensed to operate motor vehicles for hire and when and in what cities or places;

3. Whether a license to operate has ever been revoked and for what reason and where;

4. Whether applicant has ever been charged with or convicted of violation of any ordinances of the city or statutes of the state of Wisconsin, and state the nature of the charge and the place where the proceedings were taken;

5. Location of place of business of the applicant, residence during preceding year and length of time of residence in the city.

C. All applications shall be presented to and approved by the city clerk before the clerk issues the licenses. All licenses issued under this chapter shall expire on the thirtieth day of June succeeding the date of issue. Full license fees shall be deposited with the application. (Ord. 6363 §19, 2002; Ord. 6233 §5, 2001; Ord. 5429, 1994; Ord. 5165, 1991; Ord. 4515 §12, 1984; Prior code §15.101(b)).

5.54.030 License--Denial--Revocation--Suspension--Appeal. Licenses issued hereunder may be denied, revoked or suspended by the city clerk if the vehicle licensed shall be used for illegal business or purpose, for violation of any ordinance or state law applicable to the operation of motor vehicles, for violation of this chapter, or upon recommendation of the chief of police. When a license is revoked or suspended the license cards issued hereunder for such vehicle shall be returned to the city clerk to be retained by him; in cases of suspension the cards shall be returned to the licensee after the expiration of the suspension. Appeal from the afore stated determination shall be made to the administrative review board under the procedures specified in ch. 1.06. Appeal shall stay the contested revocation or suspension pending decision by the board. (Ord. 6572 §10, 2005; Prior Code §15.102).

5.54.040 Insurance coverage. It is unlawful for any person, firm or corporation to transport passengers for hire or reward by means of a motor-driven vehicle within the city unless such person, firm or corporation shall have filed with the city clerk, and there is in full force and effect at all times while such person, firm or corporation is carrying on such business, a policy of insurance in a company authorized to do business in the state insuring said owner, operator or driver of the motor-driven vehicle against loss or damage that may result to any person or persons or property from the operation or defective condition of the motor-driven vehicle, said policy of insurance to be in limits of $250,000 for any one person injured or killed and subject to such limit for each person and a total liability of $500,000 in case of one accident resulting in bodily injury or death to more than one person. The policy of insurance must also provide insurance to the extent of $100,000 for the injury or destruction of any property of any person other than the licensee. The policy shall guarantee payment of any final judgment rendered against said owner, operator, or driver of said motor vehicle within the limits herein provided irrespective of the financial responsibility or any act or omission of said motor-driven vehicle owner, operator, or driver. If at any time the policy of insurance be cancelled by the issuing company or the authority of such issuing company to do business in the state be revoked, the city manager shall require the party to whom the license is issued as hereinafter provided to replace the policy with another policy satisfactory to the city manager and in default thereof the license may be revoked. Each policy so filed with the city clerk shall contain a rider reciting that the insurer will give the city clerk written notification of the proposed cancellation of such policy. Each and all of such policies shall, however, cover loss or damage by any motor driven vehicle used by any such person, firm or corporation to the same extent as in this section set forth. Such insurance policies shall be continuing liability notwithstanding recovery thereon and shall always remain in force. Such insurance policies shall describe the motor vehicle on which the same shall be issued by the factory number, maker's name, rated seating capacity, number of passengers capable of being accommodated therein at one time, the number of the state license and the city license under which the same is being operated. When the state or city license is changed by issuance of a new one, the fact shall be indicated upon said policy contract of insurance by attachment of a rider thereto giving such new number. (Ord. 5944, 1999; Prior code §15.103).

5.54.050 Vehicle identification. Every motor-driven vehicle used for the carrying of passengers as herein provided for shall display in a prominent place visible to passengers a card bearing the name of the owner, license number of the car and the name of the driver. (Prior code §15.104).

5.54.060 Driver's license--Required. No person shall drive or operate a motor vehicle for hire that has not been licensed pursuant to Section 5.54.010 and 5.54.020 and where the operator or driver thereof has not been licensed as provided herein. (Prior code §15.105).

5.54.070 License--Application. Application for such operator's-driver's license shall be filed with the city clerk upon blanks provided by the city, and the application shall then be transmitted to the chief of police. Such application shall contain such information as the chief of police may prescribe. All applications shall be presented to the city clerk who shall be responsible for issuing all licenses. (Ord. 4515 §13, 1984; (Prior code §15.106).

5.54.080 License--Fee. The license fee shall be as stated in the City of Eau Claire Fees and Licenses Schedule and shall expire on the thirtieth day of June of each year. (Ord. 6363 §19, 2002; Ord. 6233 §5, 2001; Ord. 4789 §10, 1987; Ord. 3951 §12, 1979; Prior code §15.107).

5.54.095 Exemptions. This chapter shall not apply to the following:

A. Any escort service provided by the University of Wisconsin-Eau Claire which is operated solely for the protection of its students, is not open to the public, and where a fee is charged by the university for such transportation.

B. The operation of a vehicle for hire over a fixed or established route.

C. Transportation of persons for emergency or non-emergency medical purposes. (Ord. 5137, 1991; Ord. 4588, 1985).

5.54.100 Violation--Penalty. In case of violation of this chapter, the person, firm or corporation violating the same shall forfeit not less than twenty-five dollars, nor more than one hundred dollars, together with the costs of prosecution, for each offense. In default of payment of such forfeiture and costs of prosecution, the defendant shall be imprisoned in the county jail of Eau Claire County for not less than thirty days or more than six months unless such forfeiture and costs are sooner paid. In addition to the forfeiture and costs authorized by this chapter for violation thereof, any licensee shall be subject to the suspension or revocation of his license by the court upon conviction for any violation of this chapter. (Prior code §15.109).

Chapter 5.56

MASSAGE THERAPY FACILITIES AND THE PRACTICE OF MASSAGE THERAPY

Sections:

5.56.010 Definitions within this chapter.
5.56.020 Massage therapy facility.
5.56.030 Massage therapy facility--Operation.
5.56.035 On-site massage therapy.
5.56.040 Massage therapy facility--License required.
5.56.050 State license requirement.
5.56.055 Insurance requirements.
5.56.065 License. Denial--Revocation--Suspension--Appeal.
5.56.070 Violations.
5.56.090 Penalty.
5.56.100 Sale or transfer.
5.56.110 Expiration of licenses.
5.56.120 Exemptions.

5.56.010 Definitions within this chapter. A. "Massage therapy" means the science and healing art that uses manual actions and adjunctive therapies to palpate and manipulate the soft tissue of the human body in order to improve circulation, reduce tension, relieve soft tissue pain, or increase flexibility. "Massage therapy" includes determining whether manual actions and adjunctive therapies are appropriate or contraindicated, or whether a referral to another health care practitioner is appropriate. "Massage therapy" does not include making a medical, physical therapy, or chiropractic diagnosis.

B. "Massage therapy facility" means any place where any person engages in, conducts or carries on massage therapy or permits massage therapy to be engaged in, conducted or carried on. It does not include locations used for on-site massage therapy unless such locations become established, regularly-scheduled sites where space is leased by the massage therapist or where other indices of a bona fide facility exist.

C. "Client" means any person who receives massage therapy under such circumstance that it is reasonably expected that he or she will pay money or give anything of value.

D. “Massage therapist” means a person licensed by the state of Wisconsin and governed by Chapters 440 and 460 of the Wisconsin Statutes. (Ord. 7176, 2016; Ord. 7002§2, 2012; Ord. 6842 §2, 2008; Ord. 5820 §1, 1998; Ord. 5030, 1990).

5.56.020 Massage therapy facility. Every massage therapy facility shall meet the following requirements:

A. Every massage therapy facility shall have restroom facilities that meet the standards prescribed by state law.

B. Rooms in which massage therapy is to be practiced or administered shall have at least fifty square feet of clear floor area. Rooms shall have lighting capability of at least 10-foot candles. Such rooms shall be equipped with cabinets for the storage of clean linen and chemicals and proper receptacles for the storage of soiled linen. (Ord. 7176, 2016; Ord. 5820 §2, 1998; Ord. 5030, 1990).

5.56.030 Massage therapy facility--Operation. Every massage therapy facility and every massage therapist shall comply with the following operating requirements. These requirements shall be prominently and publicly displayed in a conspicuous place upon every premises licensed under the provisions of this section.

A. Massage therapy facilities and massage therapists shall prominently and publicly display on the premises their licenses during all hours of operation.

B. Massage therapy facilities shall at all times be equipped with clean sanitary towels, coverings and linens for body and feet to be used by all clients. Disposable coverings and towels shall not be used on more than one client. Soiled linens and paper towels shall be deposited in proper receptacles.

C. Instruments and surfaces utilized in performing massage therapy shall not be used on more than one client unless they have been first sanitized, using disinfecting agents and methods approved by the health officer for the city. Massage therapy table and/or chair pads and reusable table and/or chair coverings shall be disinfected between each massage therapy with approved chemicals. Chemicals used during massage therapy shall be stored separately in containers clearly labeled as to contents. All chemical containers shall be stored in cabinets reserved solely for such purpose.

D. Massage therapy shall not be given to clients who have open sores or other visual signs of contagion or communicable disease.

E. For purposes of ascertaining violations of this section and conducting routine inspections, police officers, health officers, building inspectors, and the fire chief shall have the right of entry onto the premises of any massage therapy facility during the hours such facility is open for business. If health officers observe that any massage therapist has open sores, or otherwise have reasonable grounds to believe that any massage therapist is infected with a contagious or communicable disease, they shall have the right to suspend such massage therapist from practicing or administering massage therapy until such time as he or she furnishes a doctor's certificate showing him to be free of any contagious or communicable disease. (Ord. 7176, 2016; Ord. 7002§3, 2012; Ord. 6842 §3, 2008; Ord. 5030, 1990).

5.56.035 On-site massage therapy. A. On-site massage therapy shall include home visits and massage therapy in public or private buildings, outside of the licensed facility. This privilege shall be available only to those massage therapists licensed under state statutes. The license must accompany the massage therapist on all site visits and the therapist must receive the permission of and register with the person in charge of the public or private building prior to performing massage therapy. On-site massage therapy shall not be permitted at hotels or motels unless it is part of a health fair or exposition, but shall not take place in a sleeping room. Therapists may not participate in more than 6 such events in a calendar year.

B. On-site massage therapy is also regulated by the conditions set forth in this chapter. (Ord. 7002 §4, 2012; Ord. 6842 §4, 2008; Ord. 5820 §3, 1998; Ord. 5030, 1990).

5.56.040 Massage therapy facility--License required. No person shall carry on the business of operating a massage therapy facility at any place within the city unless a valid license is issued pursuant to the provisions of this section for each and every such place of business.

A. **Application**.

1. Fee. Any person desiring to obtain a license to operate a massage therapy facility shall make application to the city clerk. A fee as stated in the City of Eau Claire Fees and Licenses Schedule shall accompany the submission of the application to cover the costs of administration and investigation.

2. Contents. Any person or persons desiring a massage therapy facility license shall file a written application with the city clerk on a form to be provided by the city clerk. If the applicant is a corporation, the name of the corporation shall be set forth exactly as set forth in its articles of incorporation, together with the names and addresses of each of its officers, directors and each stockholder of the corporation. If the applicant is a partnership, the application shall set forth the name and residence address of each of the partners, including limited partners, and the application shall be verified by each partner. If one or more of the partners is a corporation, the provisions of this section pertaining to a corporate applicant shall apply to the corporate partner. If the applicant is neither a corporation nor a partnership, the application shall set forth the full name and address of the applicant and be verified by the applicant. The application for massage therapy facility license shall set forth the proposed place of business and the facilities therefor, together with a detailed description of the nature and scope of the proposed business operation.

3. Information. In addition to the provisions of subsection 5.56.040 A.2., the following information shall be furnished concerning the applicant if an individual; concerning each individual stockholder, officer and director if the applicant is a corporation; and concerning the partners, including limited partners, if the applicant is a partnership:

a. The previous addresses, if any, for a period of one year immediately prior to the date of application and the dates of such residence;

b. The date of birth;

c. The business, occupation or employment history for the past two years immediately preceding the date of application, including, but not limited to, whether such person previously operated under a similar permit or license in another city in this or another state and whether or not such license was suspended or revoked;

d. Whether or not the individual has had a felony conviction involving a crime against morality under Chapter 944 of the Wisconsin Statutes has had a felony conviction involving a crime against life and bodily security under Chapter 940 of the Wisconsin Statutes, or has had a felony conviction of crimes against children under Chapter 948 of the Wisconsin Statutes, or an offense under federal or state law that is comparable to the listed offenses, during the past five years immediately preceding application.

B. **Investigation**. Applications for licenses under this section shall be referred to the chief of police, health officer, building inspector and fire chief. Applicants shall cooperate with any investigation conducted pursuant to the provisions of this section and shall permit access to the proposed place of business and facilities therefor in conjunction with any such investigation.

C. **Granting of license**. Within thirty days of the receipt of a complete application, the city clerk shall either grant or deny a massage therapy facility license. The city clerk shall grant such a license if it finds:

1. The required fee has been paid;

2. The application conforms in all respects to the provisions of this section;

3. The applicant has not knowingly made a material misstatement in the application for a license;

4. The applicant has fully cooperated in the investigation of his or her application including all inspections, if applicable;

5. The massage therapy facility as proposed by the applicant would comply with all applicable laws, including but not limited to, the city's building, zoning and health regulations;

6. The applicant, if an individual, or any of the stockholders of the corporation, any officers, or
directors, if the applicant is a corporation, or any of the partners, including limited partners, if the applicant is a partnership, has not been convicted of any felony crime involving dishonesty, fraud,

deceit or immorality as contained in Chapters 940, 944 and 948 of the Wisconsin Statutes within five years prior to the date of application;

7. The applicant has not had a massage therapy facility license, a massage therapist license, or other similar license denied or revoked for cause by this city, the state of Wisconsin or any other state, or any other city located in or out of this state within the five years prior to the date of application;

8. The applicant, if an individual, or any of the officers and directors, if the applicant is a corporation, or any of the partners, including limited partners, if the applicant is a partnership, is at least eighteen years of age;

9. The applicant, if a corporation, is licensed to do business and in good standing in the state;

(Ord. 7176; 2016; Ord. 7002 §5, 2012; Ord. 6842 §5, 2008; Ord. 6363 §20, 2002; Ord. 6233 §6, 2001; Ord. 5030, 1990).

5.56.050 State license requirement. A. No person may provide massage therapy, designate himself or herself as a massage therapist or use or assume any title or designation that represents or may tend to represent that he or she is a person licensed under this section unless they are authorized to practice and hold a valid and active state license pursuant to Chapters 440 and 460 of the Wisconsin Statutes. (Ord. 7002 §6, 2012; Ord. 6842 §6, 2008; Ord. 6363 §20, 2002; Ord. 5030, 1990).

5.56.055 Insurance requirements. A. No massage therapy facility license shall be issued until the applicant has furnished satisfactory proof that a public liability insurance policy is in full force and effect in a company authorized to do business in this state in minimum amounts of $1,000,000 for any one person injured or killed and $ 1,000,000 for the injury or destruction of any property. These policies shall cover the operation of the therapist and/or the therapy facility.

B. No licensee shall continue to engage in the massage therapy business after the above required insurance has lapsed, expired or is otherwise not in full force and effect. (Ord. 7002 §8, 2012; Ord. 6842 §8, 2008; Ord. 5030, 1990).

5.56.065 License. Denial--Revocation--Suspension--Appeal. Any license issued hereunder may be denied, revoked or suspended by the city clerk upon administrative determination that the license holder has failed or refused to comply with the provisions of this chapter, for disorderly or illegal conduct on the premises, or for violation of the rules, regulations, or laws related to massage therapy and the practice of massage therapy. Appeal from this administrative determination shall be made to the administrative review board under the procedures specified in City Code Chapter 1.06. Appeal shall stay the contested revocation or suspension pending decision by the board. ((Ord. 7176; 2016; Ord. 7002 §10, 2012; Ord. 6842 §9, 2008; Ord. 6572 §11, 2005; Ord. 5030, 1990).

5.56.070 Violations. It is unlawful for any person:

A. To operate a massage therapy facility without having a license as required by Section 5.56.040;

B. To act as a massage therapist without meeting all license requirements of Chapters 440 and 460 of the Wisconsin Statutes.

C. For a facility to allow or permit persons to act as massage therapists without first having a proper and valid State license.

D. To act as a massage therapist within a massage therapy facility which does not have a license as required by Section 5.56.040. ((Ord. 7176; 2016; Ord. 7002 §11, 2012; Ord. 6842 §10, 2008; Ord. 5030, 1990).

5.56.090 Penalty. Any person who violates any provisions of this chapter shall, upon conviction, be subject to a forfeiture of not exceeding five hundred dollars for each offense. Each day, or portion thereof, during which any violation continues shall be deemed to constitute a separate offense. (Ord. 5030, 1990).

5.56.100 Sale or transfer. Upon the sale or transfer of any interest in a massage therapy facility, the license therefor shall be null and void. Any person desiring to continue to operate such massage therapy facility following sale or transfer shall make application therefor pursuant to this chapter. (Ord. 5030, 1990).

5.56.110 Expiration of licenses and permits. All licenses or permits issued pursuant to the provisions of this chapter shall expire on the last day of June of each calendar year. (Ord. 5030, 1990).

5.56.120 Exemptions. This chapter shall not apply to the following:

A. Hospitals, nursing homes, sanitariums or other health care facilities licensed under the state of Wisconsin, and physicians, surgeons, chiropractors, osteopaths or physical therapists licensed or registered to practice their respective professions under the laws of the state;

B. Barbershops, barbers, cosmetologists and beauty salons licensed under the laws of the state, provided that such massage therapy as is practiced is limited to the head and scalp;

C. Coaches and trainers at accredited high schools and colleges while acting within the scope of their employment;

D. Trainers of any amateur, semiprofessional or professional athlete or athletic team while acting within the scope of their employment. ((Ord. 7176; 2016; Ord. 5820 §5, 1998; Ord. 5030, 1990).

Chapter 5.57

ESCORT SERVICE LICENSE

Sections:

5.57.010 Definitions.
5.57.020 Exemptions.
5.57.030 Regulated Acts.
5.57.040 Application for license.
5.57.050 Standards for Issuance of License.
5.57.060 Fees.
5.57.070 Denial of Application.
5.57.080 Renewal of License or Permit.
5.57.090 Suspension, Revocation, or non-renewal of License.
5.57.100 Responsibilities of License.
5.57.110 Registrations of Escorts.
5.57.120 Penalties and Prosecution.
5.57.130 Severability.

5.57.010 Definitions. For the purposes of this chapter, the following terms shall have the meaning indicated:

A. “Employee” An escort whose name is furnished by an escort service, is referred to a customer through an escort service, or is an agent, employee, independent contractor, or volunteer for an escort service shall be considered an employee of such service for the purposes of this ordinance.

B. “Escort” Any person who, for consideration, accompanies or offers to accompany another person to or about social affairs, entertainment or places of amusement, consorts with another person about any place of public resort or within any private quarters, or agrees to privately model lingerie, perform a striptease, or otherwise perform in a nude or semi-nude state for another person or persons.

C. “Escort Service” Any person who, for consideration, furnishes, offers to furnish, advertises to furnish, transports, facilitates, or refers escorts or accepts a commission or fee for any activities related to the provision of escort services.

D. “In Call” Any arrangement whereby an escort is provided on a premises owned, leased, rented, or controlled by the escort or escort service.

E. “Person” Any natural person, sole proprietorship, partnership, corporation or association, excepting the United States of America, the State of Wisconsin, and any political subdivision thereof.

5.57.020 Exemptions. This section does not apply to businesses, agencies and persons licensed by the State of Wisconsin or the City of Eau Claire pursuant to a specific statute or ordinance, and employees employed by a business so licensed and which perform an escort or an escort service function as a service merely incidental to the primary function of such profession, employment, or business and which do not hold themselves out to the public as an escort or an escort service.

5.57.030 Regulated Acts. A. License and Registration Required. No escort service shall operate or provide service in the City of Eau Claire without first obtaining a license. No person shall escort in the City of Eau Claire unless employed by a licensed escort service and properly registered pursuant to this chapter

B. In Calls in Residential Zones. No escort or escort service may conduct in calls on residentially-zoned property or any commercial establishment such as a hotel or motel which offers lodging to travelers or permanent residents.

C. Separate License. A license may be issued only for one escort service with one trade name. Any person, partnership, or corporation which desires to operate more than one escort service must have a separate license for each service.

D. Transfer Prohibited. No license or interest in a license may be transferred to any person, partnership, or corporation.

E. Unlawful Acts. No escort or escort service may engage in unlawful acts while acting as an escort. A violation of a criminal statute or ordinance by an escort shall be considered a violation of this ordinance by the licensee.

F. Advertising. No person may advertise indicating that an escort service is available in the City of Eau Claire unless that service possesses a valid license. No escort service may advertise using a trade name unless that trade name is disclosed in its application. Any advertisements or escort activity conducted under an unreported trade name shall be considered unlicensed activity. All advertisements, including online advertisements, shall include the escort service’s name and contact information. Advertisements, including online advertisements, shall not include code language commonly used to describe prostitution related services.

G. Physical Contact Prohibited. No escort shall touch the genital area of any client or the breasts of any female client, nor expose the breast areas or genital area of the escort.

H. Customers under Age 18. No person shall escort or agree to escort a person under the age of 18 years.

I. No person may engage the services of an escort not licensed by the City of Eau Claire.

5.57.040 Application for license. A. Application. Any person, partnership, or corporation desiring to secure a license shall make application to the Eau Claire City Clerk. The application for a license shall be upon a form approved by the City Clerk. Each applicant for a license, which shall include all partners or limited partners of a partnership applicant, and all officers, directors, agents and any other person who is interested directly in the control of the business for corporate applicants, shall furnish the following information under oath or affirmation:

1. Name, address, and age.
2. Whether the applicant holds any interest in any other escort service license or similar license or permit either within the City of Eau Claire or in some other location.
3. Whether the applicant has ever had any other escort service license or similar license or permit revoked or suspended, and the reason therefor.
4. All convictions and pending charges of felony, misdemeanor, or ordinance violations.
5. Fingerprints and two portrait photographs at least two inches by two inches of the applicant.

6. All convictions and pending charges of felony, misdemeanor, or ordinance violations of a corporation, partnership or other organization for which the applicant was or is a director, officer, partner, agent or person interested directly in the control of the organization.

7. If the applicant is a corporation, the application shall specify the name of the corporation, the date and state of incorporation, the name and address of the registered agent, and all officers and directors of the corporation, and provide a certified copy of the articles of incorporation.

8. If the applicant is a partnership, the application shall specify the name and address of all partners and provide a certified copy of the partnership agreement or articles of partnership.

B. Additional Information. Each service shall furnish the following information under oath or affirmation at the time of application:

1. The trade name of the escort service. An escort service may operate under only one trade name per license.

2. The complete address of the proposed business location with a copy of the deed, lease, or other document pursuant to which the applicant occupies such premises.

3. The service's Federal Employer Identification number and Wisconsin Sales and Use Tax permit number.

4. A written plan setting forth:

i. The exact nature of the business to be conducted;

ii. Office organization;

iii. Advertising theme and method;

iv. Copies of contracts to be used with escorts and customers;

v. The method of operation of the escort service, including the hours that the service will be open to the public; and

vi. The methods of promoting the health and safety of escorts.

5.57.050 Standards for Issuance of License. A. Standards. To receive a license to operate an escort service, an applicant must meet the following standards:

1. All persons required to be named under subsection 5.57.040 A. shall be at least 18 years of age.

2. No person required to be named under subsection 5.57.040 A. shall have been convicted of a felony.

3. Subject to Ch. 111, Wis. Stats., no person required to be named under section 5.57.040 shall have been convicted of a law or ordinance violation involving moral turpitude, prostitution, obscenity, or another crime of a sexual nature in any jurisdiction.

4. No person required to be named under section 5.57.040 shall have been convicted of a violation of a law or ordinance which substantially relates to the licensed activity.

5. No person required to be named under section 5.57.040 shall have been a director, officer, partner, agent or person interested directly in the control of an organization that has been convicted of a violation of any law or ordinance which substantially relates to the licensed activity.

B. Investigation. The Eau Claire Police Department shall investigate the applicant's qualifications to be licensed.

C. False Information. Providing false or inaccurate information on the application or in the investigation of the application shall constitute an admission by the applicant that he or she is ineligible for such license and shall be grounds for denial of the application.

D. Lack of Cooperation. Failure or refusal of the applicant to give any information required by this section or relevant to the investigation of the application or cooperate with any investigation required by this ordinance shall constitute an admission by the applicant that he or she is ineligible for such license and shall be grounds for denial of the application.

E. Pending Charges. If any charges are currently pending which, if resulting in a conviction, would disqualify the applicant pursuant to subsection A. above, the Eau Claire City Council may postpone action on the application until such time as the charge is resolved.

5.57.060 Fees. The fees under this chapter shall be as stated in the City of Eau Claire

Fees and Licenses Schedule, and shall be submitted with the application.

5.57.070 Denial of Application. An application for an escort service license shall be subject to the review and approval of the Chief of Police or the Police Chief's designee. Whenever an application is denied, the City Clerk shall, within 14 days of the denial, advise the applicant in writing of the reasons for such action. The applicant may appeal the decision to the City of Eau Claire Administrative Review Board.

5.57.080 Renewal of License or Permit. A. Process. Every license issued pursuant to this chapter shall terminate on December 31 of the year it is issued, unless sooner revoked, and must be renewed before operation is allowed in the following year. Any operator desiring to renew a license shall make application to the City Clerk not later than October 31 of the year in which the license will terminate. The application for renewal shall be filed with and dated by the City Clerk. The application for renewal shall be upon a form provided by the City Clerk and shall contain such information and data, given under oath or affirmation, as is required for an application for a new license.

B. Fee. A license renewal fee, as stated in the City of Eau Claire Fees and Licenses Schedule, shall be submitted with the application for renewal.

C. Investigation. The Eau Claire Police Department shall investigate the applicant's continuing qualifications to be licensed.

5.57.090 Suspension, Revocation, or non-renewal of License. A. Grounds. The license granted herein may be revoked or suspended for up to six months or non-renewed by the City Clerk or the City Clerk's designee after an administrative determination that the licensee has done any of the following:

1. If the licensee or any person required to be named under section 5.57.040 has made or recorded any statement required by this section knowing it to be false or fraudulent or intentionally deceptive; or

2. For the violation by the licensee, an employee, or any person required to be named under section 5.57.040 of any provision of this section, the Eau Claire Code of Ordinances, or the Wisconsin Statutes that substantially relates to the licensed activity; or

3. After the conviction of the licensee, an employee, or any person required to be named under section 5.57.040 of an offense under Ch. 944, Wis. Stats., an offense against the person or property of a patron, an offense involving substance in Subchapter II of Ch. 961, Wis. Stats., or any other offense which is substantially related to the licensed activity.

5.57.100 Responsibilities of License. A. Compliance. The licensee shall ensure compliance of the service and all employees with the provisions and requirements of this ordinance. Every act or omission by an employee constituting a violation of the provisions of this ordinance shall be deemed the act or omission of the licensee of the escort service by which the escort is employed, and the licensee shall be punishable for such act or omission in the same manner as if the licensee committed the act or caused the omission.

B. Records and Reports Required. Every escort and escort service shall:

1. Provide to each patron a written contract and receipt of payment for services. The contract shall clearly state the type of services to be performed, the length of time such services shall be performed, the total amount of money such services shall cost the patron, and any special terms or conditions relating to the services to be performed.

2. Maintain a legible written record of each transaction of any escort furnished to or arranged for on behalf of any person or customer. The record shall show the date and hour of each transaction, the name, address, and telephone number of the person requesting an escort, and the name of every escort furnished.

3. The records required by subsections 1 and 2 shall be kept available and open for inspection by the Eau Claire Police Department during business hours.

5.57.110 Registrations of Escorts. A. Information. All escorts shall, prior to acting as an escort, register with the Eau Claire Police Department. Such registration shall include the

following:

1. Name, address, birth date, any aliases, pseudonyms, or stage names used, and telephone number(s).

2. The name of the licensed escort service by which they are employed.

3. Photographs and fingerprinting with the Eau Claire Police Department.

B. Duration. All registrations hereunder are valid for the term of the affiliated escort service's license.

C. Fee. The registration fee shall be as identified in the City of Eau Claire Fees and Licenses Schedule and shall be paid to the City Clerk to cover the costs of the identification card and administration.

D. Employment by Multiple Services. Any escort employed by more than one escort service shall submit a separate registration for each service by which the escort is employed.

5.57.120 Penalties and Prosecution. A. Forfeiture and License Revocation.

1. Any person who is found to have violated subsection 5.57.030 A. of this ordinance shall forfeit a definite sum not less than $200 and not exceeding $5,000 and any license issued to the person under this chapter may be revoked.

2. Any person, partnership, or corporation who is found to have violated any other section of this ordinance shall forfeit a definite sum not exceeding $5,000 and any license issued to the person under this chapter shall be revoked.

B. Separate Offense. Each violation of this ordinance shall be considered a separate offense, and any violation continuing more than one day shall be considered a separate offense.

5.57.130 Severability. If any provision of this ordinance is deemed invalid or unconstitutional by a court of competent jurisdiction, such invalidity or unconstitutionality shall not affect the other provisions of same.

Chapter 5.58

TATTOOING AND BODY PIERCING

Sections:

5.58.010 Applicability.
5.58.020 Definitions.
5.58.030 Administration.
5.58.040 Tattooing, body piercing -- Permit required.
5.58.050 Health and sanitary requirements.
5.58.060 Temporary facility or temporary combined facility.
5.58.070 Record retention.
5.58.080 Appeals.
5.58.090 Violation -- Penalties.
5.58.100 Regulations, rules and laws adopted by reference.

5.58.010 Applicability. The provisions of this chapter shall apply to tattoo and body piercing facilities, tattoo artists and body piercers, and the practice of tattooing and body piercing. (Ord. 5865 §2, 1998; Ord. 5449, 1994).

5.58.020 Definitions. In this chapter, unless otherwise specifically indicated:

A. "Approved" means acceptable to the health department based upon its determination of conformance to necessary public health practices.

B. "Board of health" means the Eau Claire city-county health department board of health.

C. "Health department" means the Eau Claire city-county health department.

D. "Health officer" means the director of the Eau Claire city-county health department or an authorized agent of the health officer.

E. "Sterilize" means submission to the steam pressure (autoclave) method with at least 15 pounds of pressure per square inch at 250 degrees Fahrenheit for at least 30 minutes, such that all forms of microbial life, including spores, viruses, bacteria and fungi, are destroyed.

F. "Tattoo artist" means any person engaged in the practice of tattooing.

G. "Tattoo facility" means the location where tattooing is practiced.

H. "Tattooing" means and includes any method of placing or removing designs, letters, scrolls, figures, symbols, or any other marks upon or under the skin of a person with ink or color by the aid of needles or instruments.

I. "Temporary facility" means a single building, structure, area or location where a tattoo artist or body piercer performs tattooing or body piercing for a maximum of 7 days per event.

J. "Body piercer" means a person who performs body piercing on another person at that person's request.

K. "Body piercing" means perforating any human body part or tissue, except an ear, and placing a foreign object in the perforation to prevent the perforation from closing.

L. "Body piercing facility" means the premises where a body piercer performs body piercing.

M. "Temporary combined facility" means a single building, structure, area, or location where both tattooing and body piercing are performed for a maximum of 7 days per event. (Ord. 5865 §3, 1998; Ord. 5449, 1994).

5.58.030 Administration. The provisions of this chapter shall be administered by or under the direction of the health officer, who in person or by duly authorized representative, shall have the right to enter, at reasonable hours, upon premises affected by this chapter, to inspect the premises, examine and copy relevant documents and records, or obtain photographic or other evidence needed to enforce the provisions of this chapter. (Ord. 5449, 1994).

5.58.040 Tattooing, body piercing -- Permit required. No person shall engage in the practice of tattooing or body piercing or shall carry on the business of operating a tattoo or body piercing facility or a combined tattoo and body piercing facility within the city of Eau Claire unless he/she has a valid permit issued by the health department for each and every such place of business.

A. Application. Application for permits shall be made in writing to the health department on forms provided by the health department, stating the name and address of the applicant and the name and address of the proposed tattoo or body piercing facility or a combined tattoo and body piercing facility, together with such other information as may be required.

B. Fee. A fee as stated in the City of Eau Claire Fees and Licenses Schedule shall accompany the permit application.

C. Permit. Permits shall be posted in a conspicuous place in the tattoo or body piercing facility. Permits are not transferable and, except for temporary tattoo or body piercing facility permits, shall expire on June 30 following their issuance.

1. Tattoo or body piercing facility permit. A separate permit is required for each tattoo or body piercing facility. A permit shall not be transferable to a location other than the one for which it was issued. Such permits shall expire on June 30 following their issuance, unless they are issued between April 1 and June 30, in which case they shall expire on June 30 of the following year.

2. Tattoo artist or body piercer permit. A separate permit is required for each tattoo artist or body piercer engaged in the practice of tattooing or body piercing. Such permits shall expire on June 30 following their issuance, unless they are issued between April 1 and June 30, in which case they shall expire on June 30 of the following year.

3. Temporary facility or temporary combined facility permit. A separate permit is required for each temporary facility or temporary combined facility. Such permit is not transferrable to a location other than the one for which it was issued and shall expire seven days after the date it was issued.

D. Permit suspension and revocation. Such permit may be temporarily suspended by the health department for violations that present an immediate health hazard or may be revoked

after repeated violations of this chapter. Any person affected by such suspension or revocation shall have the right to appeal pursuant to s. 5.58.080. (Ord. 6363 §21, 2002; Ord. 5865 §4, 1998; Ord. 5449, 1994).

5.58.050 Health and sanitary requirements. A. Premises.

1. Floor surfaces in the room in which the tattoo or body piercing is administered shall be impervious, smooth and washable. Carpeting is not allowed.

2. A handwashing facility supplied with hot and cold water under pressure, soap, and single-service towels shall be conveniently located in the tattoo or body piercing area, in addition to what is provided in the toilet room.

3. Approved waste containers with non-absorbent, durable plastic liners shall be used for all tissues, towels, gauze pads and other similar items used on the client. Any infectious waste shall be disposed of as required by Wisconsin Administrative Code Chapter NR 526.

4. Adequate cabinets with washable surfaces shall be provided for exclusive storage of instruments, dyes, pigments, stencils, and other equipment used in the practice of tattooing or body piercing.

5. All tattoo or body piercing facilities shall be maintained in a clean, sanitary condition and in good repair.

6. The tattoo or body piercing facility application area where the procedure is performed shall be adequately lighted to a minimum of 50 foot candles.

7. Tattooing or body piercing shall be performed by a tattoo artist or body piercer in a tattoo or body piercing facility completely separated from any living quarters by a solid permanent partition. A solid door leading to the living quarters is permitted, provided it remains closed during business hours. A direct outside entrance to the tattoo or body piercing facility shall be provided.

B. Equipment.

1. All tattoo or body piercing facilities shall be equipped with an autoclave which is in good working order and which is manufactured with temperature and pressure gauges marked and visible on the outside of the unit.

a. As an alternative to requiring a pressure gauge, spore strips or suspensions shall be used at least weekly and results recorded for performance checks of the autoclave.

b. A record must be maintained for each sterilization cycle, including date, sterilizing temperature, length of time at sterilizing temperature, and what was autoclaved.

c. A minimum of one time sterile indicator tape shall be included with each load sterilized and the results recorded and the autoclave shall be spore tested at least monthly. Spore kill effectiveness testing shall be conducted by an independent laboratory.

d. The autoclave shall be of sufficient size and shall be operated in accordance with manufacturer's recommendations and in a manner to prevent crowding of the chamber.

e. The autoclave chamber temperature shall be checked at least weekly with a maximum registering thermometer and results recorded.

2. All instruments used in the practice of tattooing or body piercing shall be sterilized before use.

a. All instruments shall be thoroughly cleaned before being sterilized. This may be done with an ultrasonic cleaner or with a probe, needles, or brush able to enter the smallest opening of the instrument. The cleaning of instruments shall be done with detergent and hot water or other methods approved by the health officer.

b. All instruments used in the tattoo or body piercing procedure shall be stored in a clean, dry manner after sterilization and handled in a way that will prevent recontamination.

3. Needles. Needles shall be disposable, sterile, single-patron use.

4. Stencils.

a. Plastic stencils shall be thoroughly cleaned with soap and water and sanitized after each use. They are to be sanitized by immersion for 30 minutes in a chlorine

disinfectant solution prepared by mixing one tablespoon of household bleach containing five percent chlorine with one pint of water and allowed to air dry.

b. Prior to use, each pre-cleaned and sanitized plastic stencil shall be rinsed in a 70 percent isopropyl alcohol solution and allowed to air dry.

c. Paper stencils shall only be used once. New paper stencils shall be used for every individual.

5. Dyes and inks.

a. The licensee shall submit in writing to the health officer the source of all dyes and inks used in administering tattoos.

b. Non-toxic dyes or inks shall be taken only from effectively covered squeeze bottle containers that are easy to clean and disinfect.

c. Immediately before applying a tattoo, the dye to be used for the tattoo shall be squeezed from the dye bottles into disposable cups. The disposable cups shall be stored and handled in a manner to prevent them from becoming contaminated. Upon completion of the tattoo, the cups and dye shall be discarded. Any dye in which the needles were dipped shall not be used on another person.

C. Skin preparation.

1. Aseptic technique must be utilized in the practice of tattooing or body piercing.

a. Each tattoo artist or body piercer is required to scrub his or her hands with liquid soap (i.e., tincture of green soap) and water thoroughly before commencing tattooing or body piercing on the client.

b. If the client's skin is to be shaved, the skin shall be washed with a cleansing antiseptic/antimicrobial skin cleanser before shaving. A safety razor shall be used. A new blade shall be used for each client. The blade shall be discarded after each use. Reusable blade holders shall be sterilized after each use. If disposable blade holders are used, they may be used on one client only and then must be discarded.

c. The skin area to be tattooed or body pierced shall first be cleansed with soap and water and then prepared with antiseptic such as 70 percent alcohol (and allowed to air dry) or other method approved by the health officer.

d. Single-use gauze pads or towels shall be used in the skin cleaning and preparation.

e. Petroleum jelly applied on the tattoo area shall be dispensed from a single-use disposable container or with a sterile tongue blade or sterile applicator stick which shall be discarded after each use.

2. After the tattooing or body piercing is completed, only antibacterial ointments shall be applied on the tattoo or body piercing, and if a dressing is to be used, it must be a sterile, non-sticking dressing.

3. Persons tattooed or body pierced shall be provided with printed instructions regarding tattoo or body pierce care during the healing process.

D. General supplies.

1. All tattoo or body piercing facilities shall have clean, laundered towels, washcloths or disposable paper towels in sufficient quantity for the sanitary operation of the practice of tattooing or body piercing.

2. A clean towel and washcloth shall be used for each client.

3. Clean towels and washcloths shall be stored in a closed, dust-proof container.

4. Soiled towels and washcloths shall be stored in an approved covered container.

5. All tattoo artists or body piercers shall wear clean, washable garments.

6. The operating table, chair, and supply tables shall be constructed of a material capable of being easily and thoroughly cleaned and disinfected.

E. Tattoo artist and body piercer requirements.

1. The tattoo artist or body piercer shall be free of infectious or contagious disease that may be transmitted by the practice of tattooing or body piercing.

2. Tattoo artists or body piercers with open sores or skin infections on the hand or hands shall not be permitted to engage in the practice of tattooing or body piercing. The tattoo artist or body piercer shall wear single-use disposable latex or vinyl gloves during tattooing or body piercing.

3. Smoking or consumption of food or drink shall not be allowed in the immediate vicinity where the tattoo or body piercing procedure is being performed.

4. The tattoo artist or body piercer shall wash his/her hands thoroughly with liquid soap and water before any skin preparation, tattooing, or body piercing and after removing gloves. The hands shall be dried with individual single-service towels.

5. No person shall be present in the immediate vicinity of the area in which tattoos or body piercing are administered unless authorized by the tattoo artist or body piercer.

6. No animals, except guide dogs, are allowed in the tattoo or body piercing facility.

7. The work areas, such as counter tops, must be cleaned and wiped with a disinfectant between clients.

8. Physical examination of tattoo artists or body piercers.

a. The health officer shall have the power to require any tattoo artist or body piercer to submit to a practicing physician for a physical examination whenever the tattoo artist or body piercer is reasonably suspected of having any infectious or contagious disease that may be transmitted by the practice of tattooing or body piercing. The expense of the physical examination shall be the responsibility of the tattoo artist or body piercer. All medical records shall remain confidential, except as otherwise provided by law. Failure to obtain the required physical examination shall result in suspension or revocation of the tattoo artist or body piercing permit.

F. Clients.

1. Inquiry shall be made and no tattooing or body piercing shall be performed on any person who is suspected of having jaundice or hepatitis or who has recovered from jaundice or hepatitis within the preceding six months.

2. Tattooing or body piercing shall not be performed on any person in an area with an evident skin infection or other skin disease or condition, including, but not limited to, rashes, pimples, boils or infections. (Ord. 5865 §5, 1998; Ord. 5449, 1994).

5.58.060 Temporary facility or temporary combined facility. The requirements contained in this chapter shall apply to temporary facilities and temporary combined facilities, except where superseded by the following:

A. Permit.

1. No temporary facility or temporary combined facility may be operated before being granted a permit by the city-county health department.

2. No permit may be issued without prior inspection.

3. The permit issued by the city-county health department shall be conspicuously displayed in the temporary facility or temporary combined facility.

4. A tattoo artist or body piercer operating a temporary facility or combined temporary facility, found to be an habitual violator of this chapter by the city-county health department, may be denied a permit to operate or may have the permit revoked.

B. Premises.

1. Floors shall be maintained in a sanitary condition. Dirt floors shall be covered by an approved material which will provide protection from dust.

2. Handwashing.

a. When water is available under pressure, handwashing facilities with approved liquid waste disposal shall be reasonably accessible to the tattoo artist or body piercer.

b. When water is not available under pressure, a minimum of two basins or a two-compartment basin shall be provided.

3. Water in sufficient quantity shall be hauled and stored in containers that are easily cleanable, provided with tight-fitting covers, and maintained in a clean and sanitary condition.

4. Liquid soap and single-service towels for handwashing and drying hands shall be provided.

C. Equipment. If an approved autoclave/sterilizer is not provided, only pre-sterilized instruments that are prewrapped with time sterile indicator tape attached and stored in a clean, dry manner may be used in the practice of tattooing or body piercing. (Ord. 5865 §6, 1998; Ord. 5449, 1994).

5.58.070 Record retention. Records shall be kept by each permittee of all tattoos and body piercings administered, including the name of the client, date, general identification of the tattoo or body piercing, and tattoo artist's or body piercer's name. Records shall be kept on the premises of the tattoo or body piercing facility where tattoos or body piercings are administered. These records shall be available for inspection for a period of two years after the date the tattoo or body piercing is completed. (Ord. 5865 §7, 1998; Ord. 5449, 1994).

5.58.080 Appeals. Appeals from health department orders shall be pursuant to health department policy adopted in conformance with the procedures for conducting appeals enumerated in Section 68, Wisconsin Statutes. Copies of the appeal procedures shall be available at the health department. An appeal does not eliminate the department's right to seek court intervention in the form of injunctive or other relief. (Ord. 5449, 1994).

5.58.090 Violation -- Penalties. Any person who violates or refuses to comply with any provision of this chapter shall be subject to a forfeiture of not less than $50.00 nor more than $500.00 for each offense. Each day a violation exists or continues shall be considered a separate offense. (Ord. 5449, 1994).

5.58.100 Regulations, rules and laws adopted by reference. The applicable regulations, rules and laws set forth in ss. 252.23, 252.24 and 252.245, Wis. Stats., and HFS 173 of the Wisconsin Administrative Code are incorporated in this chapter by reference and they shall be construed, read and interpreted as though fully set forth herein. The express provisions of this chapter shall control where more restrictive. (Ord. 5865 §8, 1998).

Chapter 5.60

PRIVATE COMMUNICATIONS SYSTEMS

Sections:

I. Permits for Use of Right of Way for Private Telecommunications Systems

5.60.010 Definitions.
5.60.020 Permit required.
5.60.030 Compensation required; license fee.
5.60.040 Fee adjustment.
5.60.050 Permit nonexclusive; term.
5.60.060 Permit locations.
5.60.070 Use of streets and pole attachments.
5.60.080 Indemnification and insurance.
5.60.090 Transfers of assignments.
5.60.100 Existing private communications systems.

II. Permits for Use of Right of Way for Wireless Communications and Wireless Communications Systems

5.60.110 Definitions
5.60.120 Permit required.
5.60.130 Compensation required; license fee.

5.60.140 Fee; adjustment; savings clause.
5.60.150 Permit nonexclusive; term.
5.60.160 Permit locations.
5.60.170 Use of streets and pole attachments.
5.60.180 Transfers of assignments.
5.60.190 Placement on private property.
5.60.200 Removal of cell sites.
5.60.210 Indemnification and insurance.
5.60.220 Existing private communications systems.

III. Revocation and Penalty

5.60.230 Revocation--Appeal.
5.60.240 Penalty.

Subchapter I

Permits for Use of Right of Way for Private Telecommunications Systems

5.60.010 Definitions. In this chapter, the following words and terms have the meaning indicated, unless the context in which they are used clearly requires otherwise:

A. "Cable television system" means a non-broadcast facility consisting of a set of transmission paths with associated signal generation, reception and control equipment, under common ownership and control, which distributes or is designed to distribute to owners, users or subscribers, the signals of one or more television broadcast stations and other subscriber services with an existing franchise.

B. "Department of Engineering" and "city engineer" mean the department of engineering of the city and the city engineer designated by the city, respectively.

C. "FCC" means the Federal Communications Commission or its legal successor.

D. "Local access transport area (LATA)" means that geographic area and communications system in which the city is located and in which Ameritech or any subsequent telephone company is authorized by the Wisconsin Public Service Commission to provide exchange access telecommunications services.

E. "Local telephone service" means:

1. The access to a local telephone system and the privilege of telephonic-quality communication with substantially all persons having telephone or radio telephone stations constituting a part of such local telephone system; or

2. Any facility or service provided in connection with a service described in subsection 1.

The term "local telephone service" does not include any service which is a toll telephone service; service provided by means of a private communication system; cellular mobile telephone or telecommunication service; specialized mobile telephone or telecommunication service; specialized mobile radio, or pagers and paging, service, including, but not limited to, "beepers" and any other form of mobile and portable one-way or two-way communication; or telephone typewriter or computer exchange service.

F. "Telecommunication permit" means the privilege granted by the city in which the city authorizes a person to erect, construct, reconstruct, operate, dismantle, test, use, maintain, repair, rebuild and replace a private communications system that occupies the streets, public ways or public places within the city. Any telecommunication permit issued in accordance herewith shall be a nonexclusive permit.

G. "Permittee" means any person who is issued a telecommunication permit under this chapter. The term includes all officers, employees, agents, representatives, successors and assigns of a permittee.

H. "Public place" includes sidewalks, parking lots, parking ramps, driveways within street right of way, leased areas and easements in which the city has a possessory interest, and any other place owned or under the control of the city and open to the public.

I. "Private communications system" means any system of communications lines, cables, equipment or facilities which are used to provide a telephone, video, data, telemetry, intercom or telecommunications service, that in any manner occupies the streets, public ways or public places within the corporate limits of the city. The term also includes private owned lines or cables placed by an operator of a wireless communications system, as defined under subchapter II of this chapter, to support the backhaul portion of the network, unless the operator is a franchised telephone company or a franchised operator of a cable television system.

J. "Toll telephone service" means:

1. A telephonic-quality communication service for which there is a toll charge which varies in amount with the distance and elapsed transmission time of each individual communication; or

2. A service which entitles the subscriber or user, upon which the payment of a periodic charge which is determined as a flat amount or upon the basis of total elapsed transmission time, to the privilege of an unlimited number of telephonic communications to or from all or a substantial portion of the persons having telephone or radio telephone stations in a specified area which is outside the local telephone system area in which the station provided with this service is located.

K. "Total gross revenues" means all cash, credits or property of any kind or nature reported as revenue on permittee's audited income statements arising from or attributable to the sale or exchange of private communications services by the permittee or in any way derived from the operation of its private communications system within the city, including, but not limited to, any interconnection between its system and any other system. The term shall not include bad debts, deposits, promotional or vendor discounts or credits, or sales, service, occupation or other excise taxes to the extent that such taxes are charged separately from normal service charges and are remitted by the permittee directly to the taxing authority. (Ord. 7202, 2016; Ord. 5470, 1995).

5.60.020 Permit required. No person shall construct, operate or continue to operate a private communications system without a telecommunication permit under this chapter, unless exempted from such permit requirement by the provisions of this chapter. Application for the license shall be to the city clerk on forms required by the city clerk. The permit shall be issued by the city clerk. (Ord. 5470, 1995).

5.60.030 Compensation required; license fee. Except as otherwise provided, each permittee shall pay to the city, in consideration of the issuance of a telecommunication permit authorizing the occupancy and use of city streets, public ways and public places the following:

A. A permit fee as stated in the City of Eau Claire Fees and Licenses Schedule.

B. Lines, cables or fiber optics of a private communications system placed in a conduit or duct-bank owned by another permittee or a franchisee shall require a separate telecommunication permit. The fee for such additional telecommunication permit shall be one-half of the fee imposed under subsection B.

C. Lines, cables or fiber optics of a private communications system which are placed in a conduit or duct-bank owned by an entity not exempt by law or statute from the provisions of this section shall require a telecommunication permit, unless the franchise or other authorization by which the exempt entity has the right to place the conduit or duct-bank within the city property permits the application of the permit and fee requirements contained in this section to the lessee of space within the conduit or duct-bank.

D. Any telecommunication permittee that serves customers and charges a fee for services provided by a private communications system within the city shall pay, in addition to the applicable fees imposed by this section, 5 per cent of the annual total gross revenues derived by the permittee from transmissions that bypass the local exchange carrier. Such fee shall be paid to the city within 10 days after the first day of each calendar quarter. Revenues derived from transmissions that enter a private communications system through the LATA shall not be considered a part of total gross revenues for the purpose of calculating such fee. (Ord. 6363 §22, 2002; Ord. 5470, 1995).

5.60.040 Fee adjustment. A. The city may, at its option, adjust the fee imposed according to the provisions of section 5.60.030 D. to the extent permitted by law or by an amount not exceeding the proportional cumulative increase in the Consumer Price Index published by the United States Department of Labor for Urban Wage Earners (1967=100%), whichever is greater. The city council shall provide all permittees with reasonable notice and an opportunity to be heard prior to enacting any such adjustment as provided in this section.

B. In the event that the FCC or other entity or agency having jurisdiction determines that any charge or fee imposed under this chapter is unlawful or otherwise unauthorized, or authorizes the establishment of a different charge or fee, either greater or less than that imposed by this chapter, then the charge or fee affected shall be deemed to be modified, without further action of the city council, so as to bring all charges and fees into conformity with such determination. (Ord. 5470, 1995).

5.60.050 Permit nonexclusive; term. A. A telecommunication permit issued under this chapter shall be a nonexclusive permit for the use of the streets, public ways or public places as specified in the permit, for the erection, construction, reconstruction, operation, dismantling, testing, use, maintenance, repair, rebuilding and replacement of a private communications system.

B. A telecommunication permit issued under this chapter shall continue in force and effect for as long as the permittee is in compliance with the provisions of this chapter, and all applicable federal and state laws, rules and regulations and local ordinances, and until the space occupied pursuant to the permit is not required by the city for public purposes.

C. If any telecommunication permit is revoked under the provisions of this chapter, the private communications system facilities of permittee shall, at the option of the city, be removed from all streets, public ways and public places of the city at the sole expense of permittee. (Ord. 5470, 1995).

5.60.060 Permit locations. A. A telecommunication permit issued under this chapter shall apply only to the location or locations stated on the permit. Each permit shall state the location of each end and leg of the private telecommunications system and specify the length certified by a registered survey company or through other equivalent means acceptable to the city.

B. Nothing in this chapter shall be construed to be a representation, promise or guarantee by the city that any other permit or other authorization required under any other city ordinance or resolution for the construction or installation of a private communications system shall be issued. The requirements for any other permits as may be required by city ordinance shall continue to apply, together with all applicable permit fees. (Ord. 5470, 1995).

5.60.070 Use of streets and pole attachments. A. Prior to commencing construction of a private communications system within, above, over, under, across or through or in any way connected with the streets, public ways or public places of the city, the permittee shall obtain the written approval of, and all other required permits from, all appropriate agencies of the city, including the department of engineering. Applications for such approval shall be made in the form prescribed by the department of engineering.

B. Upon obtaining such written approval, the permittee shall give the city engineer written notice of proposed construction within a reasonable time prior to such construction, but in no event less than 10 days before construction, except for emergency repairs of existing lines and cables.

C. Any person who submits a request for a permit in accordance with this chapter shall include therein proposed agreements for the use of existing utility poles and conduits, if applicable, with the owner or owners of such facilities to be used or affected by the construction of the proposed private communications system. All such agreements shall become effective on the date of execution of a permit issued under this chapter. In the event that permission to use existing poles or conduits cannot be obtained, the permittee shall submit documentation or other evidence to the city which supports the unavailability of such poles and conduits, and a detailed alternate plan for construction, which plan assures protection for all existing facilities.

D. No permittee shall open or otherwise disturb the surface of any street, public way or other public place for any purpose without obtaining approval to do so as prescribed in subsections A. and B.

E. The permittee shall comply with all applicable provisions in the code of ordinances of the city of Eau Claire, including, but not limited to, those contained in chapter 13.10. The permittee shall restore any street, public way or public place which has been disturbed by its activities in accordance with the requirements of the city. More particularly, the permittee shall, at its own expense, restore and replace all such property injured, damaged or disturbed in a condition as good as the condition of the property immediately prior to the disturbance, damage or injury. As an alternative, in the discretion of the city engineer, the permittee shall pay to the city an amount equal to restore the property to the condition set forth herein.

F. The permittee shall occupy the streets, public ways and public places of the city as a terminable privilege under the laws of the State of Wisconsin, including, but not limited to, s. 66.0425, Wis. Stats., as the same may be amended from time to time. The permittee shall, at its expense, protect, support, temporarily disconnect, relocate in the same street, public way or other public place, or remove from such street, public way or public place, any of its property and facilities when required to do so by the city due to any public work or improvement, street vacation and abandonment, or any other work or improvement required for the public health, safety and welfare. The permittee shall promptly remove its property and facilities upon the termination or expiration of its telecommunication permit, without reimbursement or compensation therefor from the city.

G. Nothing in this chapter or any permit issued under this chapter shall be deemed to authorize the permittee to erect and maintain new poles in areas serviced by existing poles if such existing poles are available to accommodate and include permittee's facilities. The permittee shall obtain written approval from the city engineer and all other appropriate agencies of the city prior to the erection of new poles or underground conduits in areas where such poles or underground conduits are not in existence to accommodate and include permittee's facilities.

H. Permittee shall maintain all cables, conduits, wires and all other facilities and appurtenances in good condition, order and repair.

I. Permittee shall keep accurate, complete and current maps and records of its system and facilities which occupy the streets, public ways and public places within the city and shall furnish to the city, as soon as reasonably practicable, two complete copies of such maps and records, including as-built drawings, to the department of engineering.

J. The permittee shall comply with all rules and regulations issued by the department of engineering which regulate and control the construction and installation of private communications systems within the city. The permittee shall comply with all of the standards and requirements pertaining to cable television franchisees, insofar as applicable. (Ord. 7202, 2016; Ord. 5470, 1995).

5.60.080 Indemnification and insurance. A. The permittee shall indemnify and hold harmless the city, its officers, boards, commissions, agents and employees, against and from any and all claims, demands, causes of action, actions, suits, proceedings and damages, including costs or liabilities of the city with respect to its employees, of every kind and nature whatsoever, including, but not limited to, damages for injury or death or damage to person or property, and regardless of the merit of any of the same, and against all liability to others, and against any loss, cost and expense resulting or arising out of any of the same, including any attorneys fees, accountant fees, expert witness or consultant fees, court costs, per diem expense, traveling and transportation expense, or other costs or expenses for any damages resulting from the operation, construction or maintenance of the system.

B. The permittee shall, at the sole risk and expense of the permittee, upon demand of the city, made by and through the city attorney, appear in and defend any and all suits, actions, or other legal proceedings, whether judicial, quasi-judicial, administrative, legislative or otherwise, brought or instituted or had by third parties or duly constituted authorities, against or affecting the city, its officers, boards, commissions, agents or employees, and arising out of or pertaining to the exercise or the enjoyment of the telecommunication permit issued to permittee or the granting thereof by the city.

C. The permittee shall pay and satisfy and shall cause to be paid and satisfied any judgment, decree, order, directive or demand rendered, made or issued against permittee, the city, its officers, boards, commissions, agents or employees in any of these premises, and such indemnity shall exist

and continue without reference to or limitation by the amount of any bond, policy of insurance, deposit, undertaking or other assurance required hereunder, provided that neither permittee nor city shall make or enter into any compromise or settlement of any claim, demand, cause of action, action, suit or other proceeding without first obtaining the consent of the other.

D. The permittee shall file with the city clerk and shall, during the term of its permit, maintain in full force and effect at its own cost and expense the following:

1. General comprehensive liability insurance in the amount of at least $1 million, together with personal injury liability insurance in an amount of not less than $250,000 for injuries, including accidental death, to any one person, and subject to the same limit for each person in an amount not less than $500,000 on account of any one occurrence, and property damage liability insurance in an amount not less than $250,000 resulting from any one occurrence, and workers compensation insurance; provided as follows:

a. The city shall be named as an additional insured on all of said insurance policies; and

b. Where such insurance is provided by a policy which also covers permittee or any other entity or person, it shall contain a standard cross-liability endorsement; and

c. All insurance, including performance bonds, shall be issued by companies authorized to do business in the state of Wisconsin; and

d. All insurance required by this section shall be and remain in full force and effect for the entire life of the permit. Said policy or policies of insurance or a certified copy or copies thereof shall be approved by the city attorney and deposited with and kept on file by the city clerk.

2. The permittee shall not cancel any such insurance policy nor reduce the coverage thereof without prior written notice to the city clerk at least 15 days in advance. (Ord. 5470, 1995).

5.60.090 Transfers or assignments. No telecommunication permit shall be transferred or assigned, in whole or in part, nor shall title thereto, either legal or equitable, or any right, interest or property therein, pass to or vest in any person other than permittee, without the prior express written consent of the city. The consent or approval of the city to any transfer or assignment of a permit shall not constitute a waiver or release of the rights of the city in and to its streets, public ways or public places. For purposes of this section, the merger or consolidation of the permittee with another person or entity shall not be deemed to constitute a transfer or assignment within the meaning of this section. The assignment to an unaffiliated company to place a line, cable or fiber optic facility within a permitted conduit or duct bank of a permittee shall require an additional telecommunication permit accompanied by payment of all applicable charges and fees. (Ord. 5470, 1995).

5.60.100 Existing private communications systems. Except as the same have been authorized pursuant to s. 66.0425, Wis. Stats., and chapter 13.24 of this code of ordinances, all lines, cables and facilities of private communications systems which had been constructed or placed within the streets, public ways or public places of the city prior to the effective date of this chapter (revisor inserts date) shall be deemed to lack authorization to occupy said streets, public ways or public places. All unauthorized lines, cables and facilities of a private communications system shall thereafter be permitted to continue to occupy the streets, public ways and public places of the city only if compliance is obtained with all provisions of this chapter. The private communications system shall be granted a period of 3 months from the effective date of this chapter within which to obtain such compliance, provided that such period may be extended by action of the city council for good cause shown. (Ord. 5470, 1995).

SUBCHAPTER II

Permits for Use of Right of Way for Wireless Communications and Wireless Communications Systems

5.60.110 Definitions. The definitions contained in s. 5.60.010 are incorporated into this subchapter to the extent that such definitions are applicable. In this subchapter, the following words and terms have the meaning indicated, unless the context in which they are used clearly requires otherwise:

A. "Backhaul network" means the physical network that connects micro cells or pico cells to a central switching point or to the public switch telephone network.

B. "Cell site" means the location of a transmitter-receiver and backhaul network interface which provides telephonic or telecommunications type service to subscribers. The term includes single pole mounted receiver-transmitter units, receiver-transmitter units located on new or existing antenna structures, and receiver-transmitter units located on buildings and rooftops.

C. "Micro cell" means a transmitter-receiver system used to communicate to a subscriber's handset and having a typical range of 600 to 1,000 meters.

D. "Permittee" means the person who is issued a wireless communication permit in accordance with the provisions of this chapter.

E. "Pico cell" means a transmitter-receiver system used to communicate to a subscriber's handset and having a typical range of 200 to 600 meters.

F. "Total gross revenues" means all cash, credits or property of any kind or nature reported as revenue items to permittee's audited income statements arising from or attributable to the sale, lease, rental or exchange of permittee's wireless communications system, including, but not limited to, any interconnection between permittee's system within the city and any other system. The term shall not include bad debts, deposits, promotional or vendor discounts or credits, or sales, service, occupation or other excise taxes to the extent that such taxes are charged separately from normal service charges and are remitted by the permittee directly to the taxing authority.

G. "Wireless communication permit" means the privilege granted by the city by which it authorizes a person to erect, construct, reconstruct, operate, dismantle, test, use, maintain, repair, rebuild or replace a wireless communications system that occupies any portion of the streets, public ways or public places within the city.

H. "Wireless communications system" means any system which uses a form of cellular telephony which allows business and residential subscribers to access or make telephone calls, or both, through the wireless telecommunications system or over the public switch telephone network using small cordless telephone devices which communicate with limited range cells (transmitter/receiver sites) connected to a backhaul network. (Ord. 5470, 1995).

5.60.120 Permit required. No person shall construct, operate or continue to operate a wireless communications system which occupies any street, public way or public place within the city without a wireless telecommunication permit issued under this chapter, unless exempted from such permit requirement by the provisions of this chapter. Application for the license shall be to the city clerk on forms required by the city clerk. The permit shall be issued by the city clerk. (Ord. 5470, 1995).

5.60.130 Compensation required; license fee. Except as otherwise provided, each permittee shall pay to the city, in consideration of the issuance of a wireless telecommunication permit authorizing the occupancy and use of city streets, public ways and public places, the following:

A. A permit initiation fee as stated in the City of Eau Claire Fees and Licenses Schedule for each cell site.

B. The permittee shall annually pay to the city a minimum of 5%, or the maximum percentage allowed by law, of total gross revenues derived from the operation of the wireless telecommunication system, including, but not limited to, equipment rental, voice service, data service, vehicle location services, security monitoring, paging and all other services of permittee and related persons or entities subsidiary to permittee which use the wireless system to generate any portion of permittee's revenue. (Ord. 6363 §22, 2002; Ord. 5470, 1995).

5.60.140 Fee; adjustment; savings clause. A. The city may, at its option, adjust the fee imposed according to the provisions of section 5.60.130 B. to the extent permitted by law or by an amount not exceeding the proportional cumulative increase in the Consumer Price Index published by the United States Department of Labor for Urban Wage Earners (1967=100%), whichever is greater. The city council shall provide all permittees with reasonable notice and an opportunity to be heard prior to enacting any such adjustment as provided in this section.

B. In the event that the FCC or other entity or agency having jurisdiction determines that any charge or fee imposed under this chapter is unlawful or otherwise unauthorized, or authorizes the

establishment of a different charge or fee, either greater or less than that imposed by this chapter, then the charge or fee affected shall be deemed to be modified, without further action of the city council, so as to bring all charges and fees into conformity with such determination. (Ord. 5470, 1995).

5.60.150 Permit nonexclusive; term. A. A telecommunication permit issued under this chapter shall be a nonexclusive permit for the use of the streets, public ways or public places as specified in the permit, for the erection, construction, reconstruction, operation, dismantling, testing, use, maintenance, repair, rebuilding and replacement of a private communications system.

B. A wireless telecommunication permit issued under this chapter shall continue in force and effect for as long as the permittee is in compliance with the provisions of this chapter, and all applicable federal and state laws, rules and regulations and local ordinances, and until the space occupied pursuant to the permit is not required by the city for public purposes.

C. If any wireless telecommunication permit is revoked under the provisions of this chapter, the private communications system facilities of permittee shall, at the option of the city, be removed from all streets, public ways and public places of the city at the sole expense of permittee. (Ord. 5470, 1995).

5.60.160 Permit locations. A. A wireless communication permit issued under this subchapter shall apply only to the location or locations stated on the permit. Each permit shall clearly state the location of each cell site and specify the height and cell configuration.

B. Nothing in this subchapter shall be construed to be a representation, promise or guarantee by the city that any other permit or other authorization required under any other city ordinance or resolution for the construction or installation of a wireless communications system shall be issued. The requirements for any other permits as may be required by city ordinance shall continue to apply, together with all applicable permit fees. (Ord. 5470, 1995).

5.60.170 Use of streets and pole attachments. A. Prior to commencing construction of a private communications system within, above, over, under, across or through or in any way connected with the streets, public ways or public places of the city the permittee shall obtain the written approval of, and all other required permits from, all appropriate agencies of the city, including the department of engineering. Applications for such approval shall be made in the form prescribed by the department of engineering.

B. Upon obtaining such written approval, the permittee shall give the city engineer written notice of proposed construction within a reasonable time prior to such construction, but in no event less than 10 days before construction, except for emergency repairs of existing lines and cables.

C. Any person who submits a request for a permit in accordance with this chapter shall include therein proposed agreements for the use of existing utility poles and conduits, if applicable, with the owner or owners of such facilities to be used or affected by the construction of the proposed wireless communications system. All such agreements shall become effective on the date of execution of a permit issued under this chapter. In the event that permission to use existing poles or conduits cannot be obtained, the permittee shall submit documentation or other evidence to the city which supports the unavailability of such poles and conduits and a detailed alternate plan for construction, which plan assures protection for all existing facilities. Such plans shall include detailed renderings of the location and the manufacturer's specifications for the cell site equipment.

D. No permittee shall open or otherwise disturb the surface of any street, public way or other public place for any purpose without obtaining approval to do so as prescribed in subsections A. and B.

E. The permittee shall comply with all applicable provisions in the code of ordinances of the city of Eau Claire, including, but not limited to, those contained in chapter 13.10. The permittee shall restore any street, public way or public place which has been disturbed by its activities in accordance with the requirements of the city. More particularly, the permittee shall, at its own expense, restore and replace all such property injured, damaged or disturbed in a condition as good as the condition of the property immediately prior to the disturbance, damage or injury. As an alternative, in the discretion of the city engineer, the permittee shall pay to the city an amount equal to restore the property to the condition set forth herein.

F. The permittee shall occupy the streets, public ways and public places of the city as a terminable privilege under the laws of the State of Wisconsin, including, but not limited to, s. 66.0425, Wis. Stats., as the same may be amended from time to time. The permittee shall, at its expense, protect, support, temporarily disconnect, relocate in the same street, public way or other public place, or remove from such street, public way or public place, any of its property and facilities when required to do so by the city due to any public work or improvement, street vacation and abandonment or any other work or improvement required for the public health, safety and welfare. The permittee shall promptly remove its property and facilities upon the termination or expiration of its telecommunication permit.

G. Nothing in this chapter or any permit issued under this chapter shall be deemed to authorize the permittee to erect and maintain new poles in areas serviced by existing poles if such existing poles are available to accommodate and include permittee's facilities. The permittee shall obtain written approval from the city engineer and all other appropriate agencies of the city prior to the erection of new poles or underground conduits in areas where such poles or underground conduits are not in existence to accommodate and include permittee's facilities.

H. Permittee shall maintain all cables, conduits, wires and all other facilities and appurtenances in good condition, order and repair.

I. Permittee shall keep accurate, complete and current maps and records of its system and facilities which occupy the streets, public ways and public places within the city and shall furnish to the city, as soon as reasonably practicable, two complete copies of such maps and records, including as-built drawings, to the department of engineering.

J. The permittee shall comply with all rules and regulations issued by the department of engineering which regulate and control the construction and installation of wireless communications systems within the city. The permittee shall comply with all of the standards and requirements pertaining to cable television franchisees, insofar as applicable. (Ord. 7202, 2016; Ord. 5470, 1995).

5.60.180 Transfers or assignments. No wireless telecommunication permit shall be transferred or assigned, in whole or in part, nor shall title thereto, either legal or equitable, or any right, interest or property therein, pass to or vest in any person other than permittee, without the prior express written consent of the city. The consent or approval of the city to any transfer or assignment of a permit shall not constitute a waiver or release of the rights of the city in and to its streets, public ways or public places. For purposes of this section, the merger or consolidation of the permittee with another person or entity shall not be deemed to constitute a transfer or assignment within the meaning of this section. (Ord. 5470, 1995).

5.60.190 Placement on private property. A. All micro cell and pico cell facilities located on private property shall require a permit as provided by s. 5.60.120. The application for a permit shall include a detailed design drawing of the proposed cell site and an appropriate document showing the granting of permission by the property owner. All fees and requirements of this chapter shall apply to all such facilities.

B. No micro cell site, pico cell site, repeater or translator facilities shall be permitted to be located on property which is zoned for residential use under title 18 of the code of ordinances for the city of Eau Claire. (Ord. 5470, 1995).

5.60.200 Removal of cell sites. Upon the termination, cancellation, revocation or denial of any permit required under this chapter, the requestor or permittee shall promptly remove all cell sites and appurtenances included or proposed to be included under such permit at the request of the city. (Ord. 5470, 1995).

5.60.210 Indemnification and Insurance. A. The permittee shall indemnify and hold harmless the city, its officers, boards, commissions, agents and employees, against and from any and all claims, demands, causes of action, actions, suits, proceedings and damages, including costs or liabilities of the city with respect to its employees, of every kind and nature whatsoever, including, but not limited to, damages for injury or death or damage to person or property, and regardless of the merit of any of the same, and against all liability to others, and against any loss, cost and expense resulting or arising out of any of the same, including any attorneys fees, accountant fees, expert

witness or consultant fees, court costs, per diem expense, traveling and transportation expense, or other costs or expenses for any damages resulting from the operation, construction or maintenance of the system.

B. The permittee shall, at the sole risk and expense of the permittee, upon demand of the city, made by and through the city attorney, appear in and defend any and all suits, actions, or other legal proceedings, whether judicial, quasi-judicial, administrative, legislative or otherwise, brought or instituted or had by third parties or duly constituted authorities, against or affecting the city, its officers, boards, commissions, agents or employees, and arising out of or pertaining to the exercise or the enjoyment of the wireless telecommunication permit issued to permittee or the granting thereof by the city.

C. The permittee shall pay and satisfy and shall cause to be paid and satisfied any judgment, decree, order, directive or demand rendered, made or issued against permittee, the city, its officers, boards, commissions, agents or employees in any of these premises, and such indemnity shall exist and continue without reference to or limitation by the amount of any bond, policy of insurance, deposit, undertaking or other assurance required hereunder, provided that neither permittee nor city shall make or enter into any compromise or settlement of any claim, demand, cause of action, action, suit or other proceeding without first obtaining the consent of the other.

D. The permittee shall file with the city clerk and shall, during the term of its permit, maintain in full force and effect at its own cost and expense the following:

1. General comprehensive liability insurance in the amount of $1 million, together with personal injury liability insurance in an amount of not less than $250,000 for injuries, including accidental death, to any one person, and subject to the same limit for each person in an amount not less than $500,000 on account of any one occurrence, and property damage liability insurance in an amount not less than $250,000 resulting from any one occurrence, and workers compensation insurance; provided as follows:

a. The city shall be named as an additional insured on all of said insurance policies; and

b. Where such insurance is provided by a policy which also covers permittee or any other entity or person, it shall contain a standard cross-liability endorsement; and

c. All insurance, including performance bonds, shall be issued by companies authorized to do business in the state of Wisconsin; and

d. All insurance required by this section shall be and remain in full force and effect for the entire life of the permit. Said policy or policies of insurance or a certified copy or copies thereof shall be approved by the city attorney and deposited with and kept on file by the city clerk.

2. The permittee shall not cancel any such insurance policy nor reduce the coverage thereof without prior written notice to the city clerk at least 15 days in advance. (Ord. 5470, 1995).

5.60.220 Existing private communications systems. Except as the same have been authorized pursuant to s. 66.0425, Wis. Stats., and chapter 13.24 of this code of ordinances, all lines, cables and facilities of wireless communications systems which had been constructed or placed within the streets, public ways or public places of the city prior to the effective date of this chapter (revisor inserts date) shall be deemed to lack authorization to occupy said streets, public ways or public places. All unauthorized lines, cables and facilities of a wireless communications system shall thereafter be permitted to continue to occupy the streets, public ways and public places of the city only if compliance is obtained with all provisions of this chapter. The wireless communications system shall be granted a period of 3 months from the effective date of this chapter within which to obtain such compliance, provided that such period may be extended by action of the city council for good cause shown. (Ord. 5470, 1995).

SUBCHAPTER III

Revocation and Penalty

5.60.230 Revocation--Appeal. Any permit issued hereunder may be revoked by the city clerk upon administrative determination that the permit holder has failed or refused to comply with the provisions of this chapter, or for violation of the rules, regulations, or laws related to private

communications systems. Appeal from the afore stated determination shall be made to the administrative review board under the procedures specified in ch. 1.06. Appeal shall stay the contested administrative determination pending decision by the board. (Ord. 6572 §12, 2005; Ord. 5470, 1995).

5.60.240 Penalty. Any person who violates any provision of this chapter shall forfeit not exceeding $1,000 for each offense. Each day during which a violation continues shall be deemed to constitute a separate offense. (Ord. 5470, 1995).

Chapter 5.62

WEIGHTS AND MEASURES

Sections:

5.62.010 Purpose.
5.62.020 Fee assessment.
5.62.030 Notice of invoice.
5.62.040 Fee payment.

5.62.010 Purpose. The city of Eau Claire is required by Wisconsin Statues Chapter 98 to either create a department of weights and measures to enforce the statutory provisions contained therein or contract with the Department of Agriculture, Trade and Consumer Protection for such services. Wisconsin Statutes Section 98.04(2) authorizes cities electing to contract with the state for enforcement services to recover the contract costs from those persons who receive services under the weights and measures program. The city of Eau Claire hereby elects to recover the costs of the state mandated weights and measures program from those persons who receive the service. (Ord. 6553, 2004).

5.62.020 Fee assessment. A fee as stated in the city of Eau Claire Fees and Licenses Schedule shall be assessed to each person that is inspected or receives any weights and measures service under Wisconsin Statutes Chapter 98 provided by the city, or for which the city is billed by the state or other contracted entity. The total fees assessed shall not exceed the actual costs of the inspection or other service provided under the weights and measures program. (Ord. 6553, 2004).

5.62.030 Notice of invoice. A notice of invoice shall be mailed to any person inspected or who received any service under the weights and measures program. The notice shall be considered served when mailed by first class mail, postage prepaid, to the person's last known address. (Ord. 6553, 2004).

5.62.040 Fee payment. Fees shall be paid in full to the city within 30 days of notice. If the assessed fee is not paid in full within 30 days of the date of mailing of the invoice, an additional administrative collection charge of 10% of the unpaid fee, but not less than $20, shall be added to the amount due, plus interest shall accrue thereon at the rate of 1% per month or fraction thereof until the fee, plus costs and interest, is paid in full. Fees properly assessed under this section shall be enforceable against any person or business entity and against any owner or person in charge of any business entity as a personal action for debt. If the owner or person in charge is also the owner of the real estate on which the weights and measures devices are located, any delinquent fee may be placed upon the tax roll as a charge for current services as provided in Section 66.0627, Wisconsin Statutes. (Ord. 6553, 2004).

Chapter 5.63

MINIMUM WAGE

Sections:

5.63.010 Declaration of policy.
5.63.020 Definitions.
5.63.030 Minimum wage prescribed.
5.63.040 Unlawful wages.
5.63.050 Applicability of minimum wage.
5.63.060 Ability of employers to pay more than minimum wage.
5.63.070 Minimum wage rates.
5.63.080 Determination of compliance.
5.63.090 Proof of previous employment.
5.63.100 Deductions for meals and lodging.
5.63.110 Exceptions to minimum wage.
5.63.120 Deductions and record keeping.
5.63.130 Interpretation of hours worked.
5.63.140 Prohibition of displacement.
5.63.150 Domestic service employment; Casual employment.
5.63.160 Recreational or educational camps.
5.63.170 Caddies.
5.63.180 Student worklike activities and employment.
5.63.190 Sub minimum wage licenses for habilitation/rehabilitation facilities and for the employment of workers with disabilities and student learners.
5.63.200 Penalty for intimidating witness.
5.63.210 Definition of violation.

5.63.010 Declaration of policy. A. Policy. In order to preserve and promote the public welfare, health, safety, and prosperity of the city of Eau Claire and its residents, it is vital that all persons employed in our community receive wages that ensure they are able to provide themselves and their families with the basic necessities of life; food, shelter, clothing, health care, and education. The common council has determined that, due to the higher costs associated with living and working in the city, the state and federal minimum wages are inadequate to ensure that workers can supply their family's basic needs. As a consequence, such workers often work long hours and hold multiple jobs. This causes hardship for them and their families, prevents them from pursuing further education, and limits their participation in the cultural and civic life of our community. To the extent that it is necessary to establish a higher minimum wage for all employees within the city of Eau Claire, the common council enacts this ordinance to supplement those provisions of Wis. Admin. Code § DWD pertaining to the establishment of a statewide minimum wage.

B. Determination of rates. The rates adopted in this chapter reflect compensation that has been determined to be adequate to permit any employee within the city of Eau Claire to maintain herself or himself in minimum comfort, decency, and physical and moral well-being. The city of Eau Claire has also considered the effect that an increase in the minimum wage might have on the economy of the city, including the effect of a minimum wage increase on job creation, retention, and expansion, and on the availability of entry-level employment.

C. Severability. The provisions of this ordinance are severable. If any provision of this ordinance is held to be invalid or unconstitutional, or if the application of any provision of this ordinance to any person or circumstance is held to be invalid or unconstitutional, such holding shall not affect the other provisions or applications of this ordinance, which can be given effect without the invalid or unconstitutional provisions or applications. It is hereby declared the intent of the common council that this ordinance would have been adopted had any invalid or unconstitutional provision or applications not been included herein. No portion of this ordinance is intended to contravene or conflict with any portion or provision of Ch. 104, Wis. Stats., and/or Wis. Admin. Code. Ch.'s. DWD 271, 274, or 275. (Ord. 6607, 2005).

5.63.020 Definitions. As used in this chapter:

A. “Agriculture” means the same as “farm premises”, as defined in s. 102.04(3), Wis. Stats., of the worker’s compensation act.

B. “Bona fide school training program” means a program sponsored by an accredited school and authorized and approved by the state department of public instruction or the board of vocational, technical, and adult education or other recognized educational body, and provides for part-time employment training which may be scheduled for a part of the workday or workweek, supplemented by and integrated with a definitely organized plan of instruction and where proper scholastic credit is given by the school.

C. “Bona fide vocational training program” is one authorized and approved by the state board of vocational, technical, and adult education or other recognized educational body, and provides for part-time employment training which may be scheduled for a part of the workday or workweek, for alternating weeks, or for other limited periods during the year, supplemented by and integrated with a definitely organized plan of instruction designed to teach technical knowledge and related to industrial information given as a regular part of a student learner’s course by an accredited school, college, or university.

D. “Employee” means every individual who, in a calendar week, performs at least two hours of compensable work in the city of Eau Claire for any employer and who is in receipt of or is entitled to any compensation for labor performed for any employer. Employees include companions in private homes who shall be entitled to the minimum wage set forth in this ordinance.

“Employee” does not mean:

1. Any individual engaged in the house-to-house delivery of newspapers to the consumer, or engaged in direct house-to-house retail sale to the consumer.

2. Any individual engaged in performing services for a person as a real estate agent or as a real estate salesperson, if all of those services are performed for remuneration solely by commission.

3. Any individual engaged in performing services for an employer described in subsection E. hereof, if that individual is not considered under 29 USC 203 (e) (4), as amended to April 15, 1986, to be an employee for the purposes of the fair labor standards act, 29 USC 201 to 219, or if that individual is exempt under 29 USC 213, as amended to April 1, 1990, from being paid at least the federal minimum hourly wage under 29 USC 206 (a) (1).

4. Any individual engaged in performing services for an employer described in subsection E. hereof, if that individual is not subject to the civil service laws of the employer and if that individual is an elective officer; is on the personal staff of an elective officer, other than a member of the legislature; is appointed by an elective officer to serve on a policymaking level; or is an immediate adviser to an elective officer with respect to the constitutional or legal powers of the elective officer’s office.

5. Any individual engaged in performing services for the state, its political subdivisions, and any office, department, independent agency, authority, institution, association, society, or other body in state or local government, other than the city of Eau Claire, created or authorized to be created by the constitution or any law, including the legislature and the courts.

E. “Employer” means and includes every person, firm or corporation, agent, manager, representative, contractor, subcontractor or principal, or other person having control or direction of any person employed at any labor or responsible directly or indirectly for the wages of another. The term “employer” does not include the state, its political subdivisions, and any office, department, independent agency, authority, institution, association, society, or other body in state or local government, other than the city of Eau Claire, created or authorized to be created by the constitution or any law, including the legislature and the courts.

F. “Industry” means a trade, business, industry or branch thereof, or group of industries in which individuals are gainfully employed.

G. “Minimum wage” means compensation for labor paid, whether by time, piecework, or otherwise, sufficient to enable the employee receiving it to maintain himself or herself under conditions consistent with his or her welfare.

H. “Minor” means any person under 18 years of age.

I. “Month” means 30 days.

J. “Opportunity employee” means an employee who is not yet 20 years old during the first 90 consecutive days after the employee is initially employed by the employer.

K. “Tipped employee” means any employee engaged in an occupation in which they customarily and regularly receive tips or gratuities from patrons or others.

L. “Sheltered workshop” means a charitable organization or institution conducted not for profit, but for the purpose of carrying out a recognized program of habilitation/rehabilitation for workers with disabilities, and of providing workers with disabilities with remunerative employment or other occupational habilitating/rehabilitating activity of an educational or therapeutic nature.

M. “Student learner” means a student who is receiving instruction in an accredited school and who is employed on a part-time basis, pursuant to a bona fide school training program. A “bona fide school training program” means a program authorized and approved by the department of public instruction, the technical college system board, or other recognized educational body, and provided for part-time employment training which may be scheduled for a part of the workday or workweek, supplemented by and integrated with a definitely organized plan of instruction, and where proper scholastic credit is given by the accredited school.

N. “Wage” and “wages” each means any compensation for labor measured by time, piece, or otherwise.

O. “Welfare” means and includes reasonable comfort, reasonable physical well-being, decency, and moral well-being.

P. “Worker with a disability” means a worker whose earning capacity is impaired by age or physical or mental deficiency or injury, and who is being served in accordance with the recognized habilitation/rehabilitation program of a sheltered workshop within the facilities of such agency or in or about the home of the worker.

Q. Any other terms not specifically defined herein shall have the same definitions as set forth under Ch. 104, Wis. Stats., and/or Wis. Admin. Code.§ DWD 270-279. (Ord. 6607, 2005).

5.63.030 Minimum wage prescribed. Every wage paid or agreed to be paid by any employer to any employee, except as otherwise provided herein, shall be not less than the minimum wage established herein. (Ord. 6607, 2005).

5.63.040 Unlawful wages. Any employer paying, offering to pay, or agreeing to pay any employee a wage lower or less in value than the minimum wage is guilty of a violation of this ordinance. (Ord. 6607, 2005).

5.63.050 Applicability of minimum wage. The rates prescribed in this ordinance shall apply to all employees, including indentured apprentices employed at private employments, including nonprofit organizations, whether paid on a time, piece rate, commission, or other basis for each hour of work performed within the city of Eau Claire. (Ord. 6607, 2005).

5.63.060 Ability of employers to pay more than minimum wage. Nothing contained in this ordinance prohibits an employer from paying more than the minimum rates listed in this ordinance or from treating an employee as a probationary employee for less than the number of days specified in this ordinance. (Ord. 6607, 2005).

5.63.070 Minimum wage rates. A. Rates.

1. Effective July 1, 2005 and except as otherwise provided within this ordinance, no employer shall employ any employee in any occupation, trade, or industry at a lesser hourly rate than is indicated below:

a. All employees, $5.65 per hour.
b. Opportunity employees, $5.18 per hour.

2. Effective February 1, 2006 and except as otherwise provided within this ordinance, no employer shall employ any employee in any occupation, trade, or industry at a lesser hourly rate than is indicated below:

a. All employees, $6.15 per hour.
b. Opportunity employees, $5.81 per hour.

3. Effective July 1, 2006 and except as otherwise provided within this ordinance, no employer shall employ any employee in any occupation, trade, or industry at a lesser hourly rate than is indicated below:

a. All employees, $6.65 per hour.

b. Opportunity employees, $6.41 per hour.

B. Room and meal allowances.

1. Room allowances shall be computed on the basis of 20% of the prescribed minimum rate for employees based on a 40-hour week, rounded off to the nearest 5 cents.

2. Meal allowance shall be computed on the basis of 30% of the prescribed minimum rate for employees based on a 40-hour week, rounded off to the nearest 5 cents.

C. Tips. Where tips or gratuities are received by the employee from patrons or others, the employer may pay the minimum wage rate established by this subsection, providing that the employer can establish by its payroll records that for each week where credit is taken, when adding the tips received to the wages paid, no less than the minimum rate prescribed in subsection A. hereof was received by the employee.

1. Minimum rates for tipped employees.

a. Effective July 1, 2005 and except as otherwise provided within this ordinance, no employer shall employ any tipped employee at a lesser hourly rate than is indicated below:

i. All employees, $2.57 per hour.

b. Effective February 1, 2006 and except as otherwise provided within this ordinance, no employer shall employ any tipped employee at a lesser hourly rate than is indicated below:

i. All employees, $2.94 per hour.

c. Effective July 1, 2006 and except as otherwise provided within this ordinance, no employer shall employ any tipped employee at a lesser hourly rate than is indicated below:

i. All employees, $3.28 per hour.

2. Burden of proof.

a. When the employer elects to take tip credit, the employer must have a tip declaration signed by the tipped employee each pay period and show on the payroll records that any required social security or taxes have been withheld each pay period to show that when adding the tips received to the wages paid by the employer, no less than the minimum rate was received by the employee. When the employer's time and payroll records do not contain these requirements, no tip credit shall be allowed.

3. General characteristics of "tips".

a. Tip means a sum presented by a customer as a gift or gratuity in recognition of some service performed for them. It is to be distinguished from payment of a charge, if any, made for the service. Whether a tip is to be given, and its amount, are matters determined solely by the customer, and generally they have the right to determine who shall be the recipient of their gratuity. In the absence of an agreement to the contrary between the recipient and a third party, a tip becomes the property of the person in recognition of whose service it is presented by the customer. Only tips actually received by an employee as money belonging to them which they may use as they choose free of any control by the employer may be counted in determining whether they are a "tipped employee".

b. In addition to cash sums presented by customers which an employee keeps as his or her own, tips received by an employee include amounts paid by bank check or other negotiable instrument payable at par, and amounts transferred by the employer to the employee pursuant to directions from credit customers who designate amounts to be added to their bills as tips. Special gifts in forms other than money or its equivalent as above described, such as theater tickets, passes, or merchandise, are not counted as tips received by the employee.

4. Tip pooling. Where employees practice tip splitting, as where waiters or waitresses give a portion of their tips to the bus persons, both the amounts retained by the waiters or waitresses and those given to the bus persons are considered tips of the individuals who retain them.

5. Service charge.

a. A compulsory charge for service, such as 15% of the amount of the bill, imposed on a customer by an employer's establishment, is not a tip unless distributed by the employer to their employees.

b. Similarly, where negotiations between a hotel or restaurant and a

customer for banquet facilities include amounts for distribution to employees of the hotel or restaurant, the amounts must be so distributed to the employees at the end of the pay period in which it is earned.

c. If the employer in their payroll records can establish a breakdown of the service charge, such as how much is for tips, room charge, decorations, and other chargeable services, only the amount for tips must be paid to the employee at the end of the pay period in which it is earned.

d. Similarly, where an accounting is made to an employer for their information only or in furtherance of a pooling arrangement whereby the employer redistributes the tips to the employees upon some basis to which they have mutually agreed among themselves, the amounts received and retained by each individual as his or her own are counted as their tips.

6. Receiving the minimum amount "customarily and regularly". The employee must receive tips "customarily and regularly" in the occupation in which they are engaged in order to qualify as a tipped employee. If it is known that they always receive more than the stipulated amount each month, as may be the case with many employees in occupations such as those of waiters, waitresses, bellhops, taxicab drivers, barbers, or beauty operators, the employee will qualify and the tip credit provisions of subsection C. may be applied. On the other hand, an employee who only occasionally or sporadically receives tips, such as at Christmas or New Years when customers may be more generous than usual, will not be deemed a tipped employee. The phrase "customarily and regularly" signifies a frequency which must be greater than occasional, but which may be less than constant. If an employee is in an occupation in which they normally and recurrently receives tips, he or she will be considered a tipped employee even though occasionally, because of sickness, vacation, seasonal fluctuations or the like, they fail to receive tips in a particular month.

7. The tip wage credit.

a. In determining compliance with the wage payment requirements, the amount paid to a tipped employee by an employer as allowable under subsection C. is deemed to be increased on account of tips to equal the minimum wage applicable under subsection A. to such employee in the pay period for which the wage payment is made. This credit is in addition to any credit for board, lodging, or other facilities which may be allowable under subsections D. and E. The credit allowed on account of tips may be less than the difference between the applicable minimum wage and the rate for a tipped employee, but it cannot be more.

b. It is presumed that in the application of this special provision the employee will receive at least the maximum tip credit in actual tips: "If the employee receives less than the amount credited, the employer must pay the balance so that the employee receives at least the minimum wage with the defined combination of wages and tips."

c. Under employment agreements requiring tips to be turned over or credited to the employer to be treated by them as part of their gross receipts, it is clear that the employer must pay the employee the full minimum hourly wage, since for all practical purposes, the employee is not receiving tip income.

8. Overtime payments. When overtime is worked by a tipped employee who is subject to the overtime pay of Wis. Admin. Code § DWD 274, their regular rate of pay is determined by dividing their total remuneration for employment in any workweek by the total number of hours actually worked by them in that workweek for which such compensation was paid. A tipped employee's regular rate of pay includes the amount of tip credit taken by the employer, and the cash wages, including commissions and certain bonuses paid by the employer. Any tips received by the employee in excess of the tip credit need not be included in the regular rate. Such tips are not payments made by the employer to the employee as remuneration for employment within the meaning of Wis. Admin. Code § DWD 274.

D. Allowance for board and lodging. Where board or lodging or both are furnished by the employer in accordance with Wis. Admin. Code § DWD 272.04 and accepted and received by a particular employee, an allowance may be made not to exceed the following amounts:

1. Lodging.

a. All employees except opportunity employees, $41.20 per week or $5.90 per day.

b. Opportunity employees, $34.00 per week or $4.85 per day.

2. Meals.

a. All employees except opportunity employees, $61.80 per week or $2.95 per meal.

b. Opportunity employees, $51.00 per week or $2.45 per meal.

E. Board and lodging; value. Where board, lodging, or other necessities of life are furnished by the employer in accordance with s. 5.63.100 hereof and accepted and received by the employee or his or her spouse or both, by minor children or other dependents, an allowance may be made, not to exceed the "fair value" of such necessities, on the basis of average cost to the employer, or to groups of employers similarly situated, or average values to groups of employees or other appropriate measures of fair value.

F. Payment of wages on other than time basis. Where payment of wages is made upon a basis or system other than time rate, the actual wage paid per payroll period shall not be less than provided for in this ordinance.

G. Home work. Wages paid to home workers shall be not less than the rates prescribed in this ordinance. (Ord. 6607, 2005).

5.63.080 Determination of compliance. The payroll period shall be taken as the unit of determining compliance with the minimum rates prescribed in this ordinance. (Ord. 6607, 2005).

5.63.090 Proof of previous employment. An employee is responsible for providing the proof of previous employment necessary to determine if the person is a probationary employee. An employer shall not be liable for a violation of this section if the violation is caused by the employer's good faith reliance on the proof presented by an employee under this section. (Ord. 6607, 2005).

5.63.100 Deductions for meals and lodging. A. A meal means an adequate, well-balanced serving of a variety of wholesome and nutritious foods.

1. Deductions may be made only for bona fide meals consistent with the employee's work shift. No deductions shall be made or credit given for meals not eaten, except in employments where weekly room and board is provided and accepted.

2. An employer shall not require that meals be accepted as part payment of wages.

3. The employer must pay all employees for "on duty" meal periods. Such periods are to be counted as work time. An "on duty" meal period is one where the employer does not provide at least 30 minutes free from work. Any meal period where the employee is not free to leave the premises of the employer will also be considered an "on duty" meal period.

4. Authorized rest periods or breaks of less than 30 consecutive minutes per shift shall be counted as work time for which there shall be no deduction from wages.

5. Whenever a collective bargaining agreement exists, it shall govern.

B. Lodging means living accommodations which are adequate, decent, and sanitary, according to usual and customary standards. Employees shall not be required to share a bed.

C. Room and board deductions may not be made from the wages of a seasonal non-resident agricultural employee that would result in the employee receiving less than the prescribed minimum rate. (Ord. 6607, 2005).

5.63.110 Exceptions to minimum wage. Unless otherwise specifically set forth within this ordinance, the provisions of this ordinance shall not be applicable under any circumstance or with regard to an employment where, in the absence of this ordinance, any of the provisions of Wisconsin Administrative Codes would make the State Minimum Wage provisions inapplicable. (Ord. 6607, 2005).

5.63.120 Deductions and record keeping. The city of Eau Claire does hereby adopt and incorporate into this ordinance, as though fully set forth herein, the provisions of Wis. Admin. Code § DWD 272.10 and DWD § 272.11. Such listings of deductions and such records shall be made available for inspection and copying by any authorized employee of the city of Eau Claire during the regular business hours of the employer. (Ord. 6607, 2005).

5.63.130 Interpretation of hours worked. A. The city of Eau Claire does hereby adopt and incorporate into this ordinance, as though fully set forth herein, the provisions of Wis. Admin Code §

DWD 272.12.

B. To the extent that there are any conflicts between those provisions of the Wis. Admin. Code and this ordinance, the provisions of this ordinance shall govern.

C. Any hours of work which constitute sleeping time under the provisions of Wis. Admin. Code § DWD 272.11(2)(d) shall be exempt from the hourly minimum wage rates of s. 5.63.070 hereof. Such hours shall be subject to the appropriate state and federal wage rates in force and effect at the time such wages are earned. (Ord. 6607, 2005).

5.63.140 Prohibition of displacement. An employer may not displace an employee solely for the purpose of hiring an employee to be paid the opportunity wage. (Ord. 6607, 2005).

5.63.150 Domestic service employment; Casual employment.

A. Domestic service employment.

1. "Domestic service employment" means all services related to the care of persons or maintenance of a private household or its premises, on a regular basis, by an employee of a private householder. Such occupations shall include, but not be limited to the following: butlers, chauffeurs, cooks, day workers, gardeners, graduate nurses, grooms, handy persons, house cleaners, housekeepers, laundry persons, practical nurses, tutors, valets, and other similar occupations.

2. Domestic workers who reside in the employer's household are covered under the rates prescribed by this ordinance. Employers may take credit for board and lodging as prescribed herein.

3. Record keeping requirements provided in s. 5.63.120 hereof shall apply.

B. Casual employment. "Casual employment" means employment which is on an irregular or intermittent basis for not more than 15 hours per week for any one employer. This applies to the following: baby sitting, mowing lawns, raking leaves, shoveling snow, or other similar odd jobs. The minimum rates prescribed by this ordinance shall not apply to casual employment in or around a home in work usual to the home of the employer, and not in connection with or part of the business, trade, or profession of the employer. (Ord. 6607, 2005).

5.63.160 Recreational or educational camps. A. Minimum rates. The minimum wage of all employees employed in recreational or educational camps and day camps, except counselors, shall be computed on an hourly basis as prescribed in s 5.63.070 hereof.

B. Allowances for board and lodging. Where board or lodging or both are furnished by the employer in accordance with s. 5.63.100 and accepted and received by the employee, an allowance may be made not to exceed the amounts specified in subsection 5.63.070 D.

C. Counselors. The minimum wage of counselors employed in seasonal recreational or educational camps and day camps may be computed on a weekly basis as follows:

1. Adult counselors 18 years of age and over:

PER WEEK

a. If board and lodging are not furnished, the rate shall be not less than $140.00.

b. If board only is furnished, the rate shall be not less than $110.00.

c. If board and lodging are furnished, the rate shall be not less than $91.00.

2. Counselors 17 years of age and under:

PER WEEK

a. If board and lodging are not furnished, the rate shall be not less than $123.00.

b. If board only is furnished, the rate shall be not less than $92.00.

c. If board and lodging are furnished, the rate shall be not less than $74.00.

D. Records. Recreational or educational camps and day camps are not required to keep the daily and weekly time records required by § DWD 272.11 (1) (d), (e), and (f) for counselors employed and paid on a weekly basis.

E. Definitions. For the purpose of this section:

1. "Recreational or educational camp" means a camp operated under trained leadership for the purpose of providing group experience for and contributing to the physical, mental,

spiritual, and social growth of campers who are less than 18 years of age and who make such camp their residence during the camping period.

2. "Recreational or educational day camp" means a camp operated under trained leadership for the purpose of providing group experience and contributing to the physical, mental, spiritual, and social growth of campers who participate in such camping program during daytime periods, but not overnight.

3. "Camp counselor" means a person employed by a "recreational or educational camp" or "recreational or educational day camp" who leads, directs, and instructs campers in such camps in their camping program and activities, and shares responsibility for the total care and well-being of campers. (Ord. 6607, 2005).

5.63.170 Caddies. The minimum wage of employees employed as caddies shall be:

$5.90 - 9 holes.

$10.50 - 18 holes. (Ord. 6607, 2005).

5.63.180 Student worklike activities and employment. A. Independent colleges and universities.

1. Independent colleges and universities may employ full-time students who are 18 years of age and over for 20 hours per week or less at the federal minimum wage rates established under 29 USC 206.

2. Students who work at independent colleges or universities for over 20 hours per week shall be paid at the rates established in s. 5.63.070 hereof.

B. Elementary and secondary schools. Student worklike activities that meet the criteria of Wis. Admin. Code § DWD 270.085 are not covered by the minimum wage provisions of this ordinance. (Ord. 6607, 2005).

5.63.190 Sub minimum wage licenses for habilitation/rehabilitation facilities and for the employment of workers with disabilities and student learners. The provisions of this ordinance do not apply to any facility or employer who holds a license in good standing issued by the State of Wisconsin pursuant to Wis. Admin. Code § DWD 272.09, allowing said employer or facility to pay subminimum wages. (Ord. 6607, 2005).

5.63.200 Penalty for intimidating witness. No employer may discharge or threaten to discharge, or in any way discriminate or threaten to discriminate against any employee because the employee has filed a complaint alleging a violation of this ordinance, has otherwise asserted his or her rights under this ordinance, has informed any other employee of his or her rights under this ordinance, has testified or is about to testify or because the employer believes that the employee may testify in any investigation or proceeding relative to the enforcement of this ordinance. Any employer who engages in such prohibited activity is guilty of a violation of this ordinance and upon conviction thereof, shall be subjected to a forfeiture of not less than $25 nor more than $2,500 for each offense. (Ord. 6607, 2005).

5.63.210 Definition of violation. Each day during which any employer shall employ a person for whom a minimum wage has been fixed at a wage less than the minimum wage fixed shall constitute a separate and distinct violation of this ordinance. The penalty for each violation shall be a forfeiture of not less than $25 and not more than $200 for a first offense within one year, not less than $200 nor more than $1,000 for a second violation within one year, and not less than $1,000 nor more than $2,500 for a third or subsequent violation within one year. (Ord. 6607, 2005).

Chapter 5.64

DOCKLESS BICYCLE SHARE

Sections:

5.64.010 Purpose.
5.64.020 Definitions.

5.64.030. License Required.
5.64.040. License Requirements.
5.64.050. Licensee Requirements.
5.64.060. Dockless Shared Bicycle Standards.
5.64.070. Parking Dockless Shared Bicycles.
5.64.080. Penalty.

5.64.010. Purpose. The purpose of this chapter is to protect the public health, safety, and welfare to prevent or mitigate against any adverse impact that dockless shared bicycles may have to public or private property by licensing all persons who make available dockless shared bicycles in the city.

5.64.020. Definitions. For purposes of this chapter, the terms herein have the following meanings:

A. "Customer" shall mean a user of a dockless shared bicycle.

B. "Dockless" shall mean without a structure at a permanent, fixed location from which shared bicycles may be deployed for use by the public.

C. "Dockless bicycle share" shall mean a transportation system providing users the ability to access bicycles via mobile technology and that do not need to be attended by the operator, allowing the user to pick up a bicycle from one location and leave it at another within a system's service area. Scooters and scooters with electric assist are specifically prohibited and shall not constitute part of a dockless bicycle share.

D. "Dockless shared bicycle" or "shared bicycle" shall mean a bicycle or electric bicycle offered or operating in a system through which members of the public are offered for consideration the use of bicycles without the use of fixed docking facilities.

E. "Mobile application" shall mean the software installed on a customer's mobile device that allows the customer to access dockless shared bicycles.

F. "Operator" shall mean a person or entity who offers dockless shared bicycles.

G. "Rebalancing" shall mean redistributing bicycles throughout the city to ensure all areas are served by dockless bicycle share.

5.64.030. License Required. Any person conducting or carrying on the business of offering a dockless bicycle share shall have first obtained a license in accordance with this chapter.

5.64.040. License Requirements. A. A license applicant under this chapter shall apply on forms available from the city clerk and pay all applicable fees established in the Fees and Licenses Schedule.

B. A license applicant shall maintain commercial general liability insurance during the period of the license in the amount of at least two (2) million dollars and shall name the City of Eau Claire as an additional insured.

C. A license applicant shall provide a financial guaranty, in the form of cash on deposit with the city, upon which the city may immediately draw, in the amount of $80 per bicycle, with a maximum of twelve thousand ($12,000) dollars, to secure performance of the terms of this license. If a licensed operator increases the size of its fleet as permitted by this chapter, the financial guaranty shall be adjusted appropriately before deploying additional bicycles. The financial guaranty shall be used to pay city expenses including, without limitation, the following:

1. Public property repair and maintenance costs caused by the operator's equipment;
2. Any cost for removing or storing bicycles improperly parked; and
3. Any cost to the city to remove bicycles if the applicant's license expires or is otherwise terminated.

D. A license applicant shall sign an agreement indemnifying and holding the city harmless, on a form available from the city clerk.

E. A license applicant shall rent from the city at least one designated dockless shared bicycle parking location in each section of the city, per specifications of the license. Available

locations and associated costs, including costs for installation or repair of concrete, asphalt, paint, labor or other related items, for city locations shall be available from the city engineer or her or his designee on a first come, first served basis. A licensee renewing a license shall have first opportunity to renew rental of a designated city parking location rented by licensee in the previous license year, if renewed by March 1. Licensee shall maintain at least five bikes at each city property rental location.

F. The license period shall run from March 1 through November 30.

5.64.050. Licensee Requirements.

A. A licensee shall provide, in its mobile application, a means for customers to notify the operator if there is a safety or maintenance issue with the dockless shared bicycle.

B. A licensee shall include, in its mobile application, prominently displayed notification to users that:

1. Bicycle riding on sidewalks is not permitted in certain business districts consistent with the City's code of ordinances and Walk your Wheels messaging.
2. Helmet use is encouraged while riding a bicycle;
3. Users shall yield to pedestrians on sidewalks and in crosswalks;
4. When riding on-street, users must comply with all traffic regulations, as drivers would in a motor vehicle;
5. Shared bicycles shall only be parked in bicycle racks, designated bicycle parking areas, or on private property with the consent of the property owner;
6. Electric bicycles shall not have the motor engaged while operating on sidewalks or trails; and
7. Wisconsin's intoxicated driving laws are applicable to a user operating an electric bicycle with the motor engaged.

C. A licensee shall provide users with a 24-hour customer service telephone number to report safety concerns, complaints, or ask questions.

D. A licensee shall have a staffed business location located within the City of Eau Claire, in an appropriately zoned location, for the purpose of local business operations, maintenance and rebalancing efforts.

E. A licensee shall understand and educate users regarding the laws applicable to riding and operating in the city, including that bicycles are prohibiting from operating on sidewalks in certain geographic areas.

F. A licensee shall provide direct, current contact information to the city for the licensee or local persons capable of retrieving or rebalancing shared bicycles. Licensee shall retrieve or rebalance shared bicycles within two hours of receiving a request from the city.

G. A licensee shall remove or repair any inoperable shared bicycle or shared bicycle that is not safe to operate, within 24 hours of notice by any means to the licensee.

H. A licensee shall maintain records of the number of rides sold or used in each month, the distance traveled in each ride and the geographic area covered, and provide such information monthly to the city.

I. A licensee shall not deploy more than 150 shared bicycles. Up to an additional 50 shared bicycles may be deployed if merited by data provided by the licensee and approved by the city engineer or her or his designee. Electric bicycles and traditional bicycles shall count equally toward this maximum.

J. A licensee shall rebalance shared bicycles every morning to maintain supply throughout all areas of demand in the city.

K. A licensee shall remove all shared bicycles from public right-of-way and all city property every morning by 6:00 a.m., except for those areas rented by licensee from the city.

L. A licensee shall remove all shared bicycles from use in the city during any unlicensed time period, including the months of December, January and February. All shared bicycles shall be temporarily removed from city property, if specified in the rental agreement, when a snow event is declared and may be returned after the snow event is complete. All shared bicycles shall further be temporarily removed from the public right-of-way and parking lots in the event of a snowfall two inches or greater so as not to interfere with snow removal efforts.

M. A licensee shall not offer a scooter or electric scooter as part of a dockless bicycle

share.

5.64.060. Dockless Shared Bicycle Standards. No person shall offer a dockless shared bicycle for use that does not meet each standard set forth in this section and any other section of this chapter:

A. All bicycles used in a dockless bicycle share shall meet the standards outlined in the Code of Federal Regulations under Title 16, Chapter II, Subchapter C, Part 1512 and by Wisconsin Statutes, including 347.489, Wis. Stats. Additionally, the shared bicycle shall meet the safety standards outlined in International Organization for Standardization (I.S.O.) 43.150 – Cycles, subsection 4210.

B. All electric bicycles used in a dockless bicycle share shall meet the National Highway Traffic Safety Administration's definition of low-speed electric bicycles and shall further be subject to the same requirements as ordinary bicycles described in this section.

C. Speed of electric bicycles used in a dockless bicycle share shall be governed to 15 miles per hour or other speed approved or required by the chief of police or her or his designee.

D. The shared bicycle shall be equipped with technology to track ridership data required by this chapter.

E. The shared bicycle shall have affixed, in a prominent location, identifying information that includes:

1. The name, address, email address, and 24-hour customer service telephone number of the licensee; and
2. A unique identifying number or series of numbers for each shared bicycle.

5.64.070. Parking Dockless Shared Bicycles.

A. No user of a dockless shared bicycle shall park a shared bicycle in any location except where authorized by this code of ordinances. Both the licensee and user are jointly and severally liable for any parking in violation of this code of ordinances.

B. Any dockless shared bicycle left in an unauthorized location or parked in violation of this code of ordinances may be collected and disposed of by the city. The cost of such collection or disposal shall be collected from the licensee either through the financial guaranty required by this chapter or directly from the licensee if the financial guarantee is insufficient to cover the cost.

5.64.080. Penalty. Any person or corporation violating the provisions of this chapter shall upon conviction be fined a sum of not less than sixty dollars and not more than five hundred dollars, together with the costs of prosecution. (Ord. 7321, 2019)

Chapter 5.65

SCOOTER SHARE

Sections:

5.65.010 Purpose.
5.65.020 Definitions.
5.65.030. License Required.
5.65.040. License Requirements.
5.65.050. Licensee Requirements.
5.65.060. Shared Scooter Standards.
5.65.070. Parking Shared Scooters.
5.65.080. Penalty.

5.65.010. Purpose. The purpose of this chapter is to protect the public health, safety, and welfare to prevent or mitigate against any adverse impact that shared scooters may have to public or private property by licensing all persons who make available shared scooters in the city.

5.65.020. Definitions. For purposes of this chapter, the terms herein have the following meanings:

A. “Customer” shall mean a user of a shared scooter.

B. “Dock” shall mean a structure at a permanent, fixed location from which shared scooters may be deployed for use by the public.

C. “Scooter share” shall mean a transportation system providing users the ability to access scooters via mobile technology and that do not need to be attended by the operator, allowing the user to pick up a scooter from one location and leave it at another within a system’s service area.

D. “Shared scooter” shall mean a scooter or electric scooter offered or operating in a system through which members of the public are offered for consideration the use of scooters with the use of fixed docking or parking facilities.

E. “Mobile application” shall mean the software installed on a customer’s mobile device that allows the customer to access shared scooters.

F. “Operator” shall mean a person or entity who offers shared scooters.

G. “Rebalancing” shall mean redistributing scooters throughout the city to ensure all areas are served by scooter share.

5.65.030. License Required. Any person conducting or carrying on the business of offering a scooter share shall have first obtained a license in accordance with this chapter.

5.65.040. License Requirements. A. A license applicant under this chapter shall apply on forms available from the city clerk and pay all applicable fees established in the Fees and Licenses Schedule.

B. A license applicant shall maintain commercial general liability insurance during the period of the license in the amount of at least two (2) million dollars and shall name the City of Eau Claire as an additional insured.

C. A license applicant shall provide and maintain a financial guaranty, in the form of cash on deposit with the city, upon which the city may immediately draw, in the amount of $80 per scooter, with a maximum of twelve thousand ($12,000) dollars, to secure performance of the terms of this license. If a licensed operator increases the size of its fleet as permitted by this chapter, the financial guaranty shall be adjusted appropriately before deploying additional scooters. The financial guaranty shall be used to pay city expenses including, without limitation, the following:

1. Public property repair and maintenance costs caused by the operator’s equipment;
2. Any cost for removing or storing scooters improperly parked; and
3. Any cost to the city to remove scooters if the applicant’s license expires or is otherwise terminated.

D. A license applicant shall sign an agreement indemnifying and holding the city harmless, on a form available from the city clerk.

E. A license applicant shall rent from the city at least one designated shared scooter parking location in each section of the city, per specifications of the license. Available locations and associated costs, including costs for installation or repair of concrete, asphalt, paint, labor or other related items, for city locations shall be available from the city engineer or her or his designee on a first come, first served basis. A licensee renewing a license shall have first opportunity to renew rental of a designated city parking location rented by licensee in the previous license year, if renewed by June 30. Licensee shall maintain at least five scooters at each city property rental location. Licensee shall be responsible for all snow removal at the property rental location and shall clear snow within twenty-four hours following a snowfall during licensee operations.

F. The license period shall run from July 1 through June 30.

5.65.050. Licensee Requirements.

A. A licensee shall provide, in its mobile application, a means for customers to notify the operator if there is a safety or maintenance issue with the shared scooter.

B. A licensee shall include, in its mobile application, prominently displayed notification of the following information:

1. Scooter riding on sidewalks is not permitted in certain business districts

consistent with the City's code of ordinances and Walk your Wheels messaging;

2. Helmet use is encouraged while riding a scooter;

3. Users shall yield to pedestrians on sidewalks and in crosswalks;

4. When riding on-street, users must comply with all traffic regulations, as drivers would in a motor vehicle;

5. Shared scooters shall only be parked in bicycle racks, designated scooter parking areas, or on private property with the consent of the property owner; and

6. Electric scooter riding is prohibited wherever city ordinance prohibits the operation of motorized vehicles.

C. A licensee shall provide users with a 24-hour customer service telephone number to report safety concerns, complaints, or ask questions.

D. A licensee shall have a staffed business location located within the City of Eau Claire, in an appropriately zoned location, for the purpose of local business operations, maintenance and rebalancing efforts.

E. A licensee shall understand and educate users regarding the laws applicable to riding and operating in the city, including that scooters are prohibiting from operating on sidewalks in certain geographic areas.

F. A licensee shall provide direct, current contact information to the city for the licensee or local persons capable of retrieving or rebalancing shared scooters. Licensee shall retrieve or rebalance shared scooters within two hours of receiving a request from the city.

G. A licensee shall remove or repair any inoperable shared scooter or shared scooter that is not safe to operate, within 24 hours of notice by any means to the licensee.

H. A licensee shall maintain records of the number of rides sold or used in each month, the distance traveled in each ride and the geographic area covered, and provide such information monthly to the city.

I. A licensee shall not deploy more than 300 shared scooters. Up to an additional 50 shared scooters may be deployed if merited by data provided by the licensee and approved by the city engineer or her or his designee. Electric scooters and traditional scooters shall count equally toward this maximum.

J. A licensee shall rebalance shared scooters every morning to maintain supply throughout all areas of demand in the city.

K. A licensee shall remove all shared scooters from use in the city during any unlicensed time period. All shared scooters shall be temporarily removed from the public right-of-way and parking lots in the event of a snowfall two inches or greater so as not to interfere with snow removal efforts. Scooters not removed may be removed by the City at licensee expense and any damage to scooters or related equipment that may be caused by snow removal activity shall be the sole responsibility of the licensee.

L. A licensee shall prohibit through use of geofencing or other similar means, the operation of a shared electric scooter in areas where motorized vehicle operation is prohibited.

5.65.060. Shared Scooter Standards. No person shall offer a shared scooter for use that does not meet each standard set forth in this section and any other section of this chapter:

A. All scooters used in a scooter share shall meet all applicable federal and state standards for electric scooters, including those established in 347.489, Wis. Stats.

B. Speed of electric scooters used in a scooter share shall be governed to 15 miles per hour or other speed approved or required by the chief of police or her or his designee. On city trails, speed shall additionally be governed to 10 miles per hour.

C. The shared scooter shall be equipped with technology to track ridership data required by this chapter.

D. Each shared scooter shall have affixed, in a prominent location, identifying information that includes:

1. The name, address, email address, and 24-hour customer service telephone number of the licensee; and

2. A unique identifying number or series of numbers for each shared scooter.

5.65.070. Parking Shared Scooters.

A. Shared scooters shall be parked only in a docking station, bicycle rack, designated shared scooter parking location rented from the city, geofenced parking location, or on private property with permission, and shall be parked upright in a neat and orderly manner. Geofenced locations for shared scooter parking shall be subject to approval by the city engineer or her or his designee.

B. No user of a shared scooter shall park a shared scooter in any location except where authorized by this code of ordinances. Both the licensee and user are jointly and severally liable for any parking in violation of this code of ordinances.

C. Any shared scooter left in an unauthorized location or parked in violation of this code of ordinances may be collected and disposed of by the city. The cost of such collection or disposal shall be collected from the licensee either through the financial guaranty required by this chapter or directly from the licensee if the financial guarantee is insufficient to cover the cost.

5.65.080. Revocation or Suspension. A license may be revoked or suspended by the director of engineering or designee where necessary based on a violation of this ordinance, to protect the public health, safety, or welfare, to prevent a nuisance from developing or continuing, emergency situations, or to comply with the city code of ordinances, or to comply with applicable state or federal law.

5.65.090. Penalty. Any person or business violating the provisions of this chapter shall upon conviction be fined a sum of not less than sixty dollars and not more than five hundred dollars, together with the costs of prosecution. (Ord. 7414, 2021)

Title 6

ANIMALS

Chapters:

6.04 Dog and Cat License
6.08 Animal Control
6.10 Pet Shops and Kennels
6.11 Treatment of Animals
6.12 Keeping Certain Animals
6.14 Keeping of Honey Bees
6.15 Keeping of Poultry
6.16 Pigeons
6.20 Squirrels

Chapter 6.04

DOG AND CAT LICENSE

Sections:

6.04.005 Purpose.
6.04.010 License--Required--Fee.
6.04.020 Tags.
6.04.030 Violation--Penalty.

6.04.005 Purpose. The purposes of this chapter are to promote humane treatment of all animals and to reduce the hazard, nuisances and conflicts created by irresponsible pet ownership and to promote effective enforcement of pet licensing requirements. (Ord. 2864 §2, 1978).

6.04.010 License--Required--Fee. No person shall own, harbor, or keep a dog or cat over the age of 5 months within the corporate limits of the city without first obtaining a license therefor from the city treasurer. Licenses for dogs shall be issued in compliance with Wisconsin Statutes Section 174.05 through 174.10. The license fee shall be as stated in the City of Eau Claire Fees and Licenses Schedule. Written proof of neutering or spaying shall also accompany the application in order to qualify for any reduced rate. The license year shall commence on January 1st and shall end on the following December 31st. Licenses shall not be transferable, license fees shall not be prorated nor refundable. Application for such license shall be made before April 1st of the current license year, or within thirty days of acquiring a licensable dog or cat. A late fee as stated in the City of Eau Claire Fees and Licenses Schedule shall be assessed and collected from every owner of a dog or cat 5 months of age or over, if the owner failed to obtain a license prior to April 1st of each year, or within 30 days of acquiring ownership of a licensable dog or cat or if the owner failed to obtain a license on or before the dog or cat reached licensable age. A valid rabies certificate shall accompany the application stating the name of the veterinarian who administered the inoculation, the date it was given, and the length of time during which such inoculation will be effective, which shall be at least as long as the license period. (Ord. 6363 §23, 2002; Ord. 5772, 1997; Ord. 5190, 1991; Ord. 4987, 1989; Ord. 4789 §12, 1987; Ord. 4613 §1, 1985; Ord. 4160, 1981; Ord. 4155 §1, 1981; Ord. 3864 §3, 1978; Ord. 3392 §1, 1973; Prior code §12.01(a)).

6.04.020 Tags. Upon receipt of the rabies certificate and the payment of said fee the treasurer shall issue a tag that shall be attached to the collar of such licensed dog. No person shall, negligently or otherwise, permit any dog to be untagged. A dog is considered to be untagged if a valid license tag is not attached to a collar which is kept on the dog whenever the dog is outdoors, unless the dog is securely confined in a fenced area. No person other than the owner or a police officer in line of his duty shall remove the license tag from the dog. (Ord. 4174 §2, 1981; Ord. 3864 §4, 1978; Ord. 3392 §2, 1973; Prior code §12.01(b)).

6.04.030 Violation--Penalty. Any person who violates any provision of this chapter shall forfeit not less than twenty-five dollars nor more than one hundred dollars for each offense and, in default of payment thereof, shall be committed to the county jail of Eau Claire County. (Ord. 3864 §5, 1978).

Chapter 6.08

ANIMAL CONTROL

Sections:

6.08.010 Running at large.
6.08.020 Number per family.
6.08.030 Care of dogs and domesticated animals.
6.08.040 Barking.
6.08.045 Dangerous dogs.
6.08.050 Quarantine and disposition of rabid animals.
6.08.055 Vaccination.
6.08.060 Animal excreta.
6.08.070 Violation--Penalty.

6.08.010 Running at large. A. No dogs, cats or other domestic animals shall negligently or otherwise, be permitted to run at large within the city limits. A dog, cat or other domestic animal shall be considered to be running at large if it is off the premises of its owner and not under the control of the owner or some other person.

B. All dogs, cats or other domestic animals shall be kept on a leash no longer than eight feet at all times when off the premises of their owner.

C. No dog shall be permitted in a public cemetery, except when confined within a vehicle, or in a playground, schoolyard, beach or other posted area, except with the express permission of the authority in charge. (Ord. 4174 §3, 1981; Ord. 3864 §§7, 8, 1978; prior code §12.01(c)).

6.08.020 Number per family. No individual or family unit living together, firm or corporation shall keep more than two dogs and three cats over the age of three months within any residential district, excepting however, bona fide animal hospitals, pet shops and kennels. However, an animal control officer of the Eau Claire Police Department may, in his discretion, permit the keeping of more than two dogs and/or three cats by any person where no nuisance will be created by granting a variance. The fee to apply for the above referenced variance shall be as stated in the City of Eau Claire Schedule of Fees and Licenses. The decision of this person may be appealed to the administrative review board under the procedures specified in ch. 1.06. Appeal shall stay the contested administrative determination pending decision by the board. (Ord. 7031 §1, 2012; Ord. 6572 §13, 2005; Ord. 5077, 1990; Ord. 3864 §9, 1978; Prior code §12.01(d)).

6.08.030 Care of dogs and domesticated animals. All dogs and domesticated animals shall be cared for, maintained and handled in a humane and sanitary manner and in such a way as to prevent noises, barking, fighting or howling or other disturbance of the peace and quiet of the neighborhood. No domestic animal shall be abandoned or turned loose by its owner or keeper. No animal shall be inhumanely confined in a manner which causes or is likely to cause pain, suffering, injury or death. (Ord. 3864 §10, 1978; Ord. 3392 §III, 1973; Prior code §12.01(e)).

6.08.040 Barking. No person shall keep or harbor within the city any dog which by loud or frequent or habitual barking, yelping or howling shall cause serious annoyance to the neighborhood or to persons passing to and fro upon the streets. (Prior code §12.01(f)).

6.08.045 Dangerous dogs. A. Purpose. The purpose of this section is to protect the public health, safety, and general welfare of the citizens and visitors of the city of Eau Claire by reasonable regulation of dangerous dogs.

B. Definitions.

1. "City" means the city of Eau Claire, or the official, agent, or employee of the city designated by the city manager.

2. "Dangerous dog", as used in this section, means:

a. Any dog which, without provocation, has attacked, bitten, or injured any human being or domestic animal on public or private property; or

b. Any dog which, without provocation, behaves in a manner that a reasonable person would believe poses an unjustified imminent threat of serious injury or death to one or more persons or domestic animals; or

c. Any dog which is owned, harbored, or trained primarily or in part for the purpose of dog fighting.

3. "Department" means the city of Eau Claire police department.

4. "Harbored" means that the dog has been fed or sheltered for 3 or more consecutive 24 hour periods. This definition shall not apply to any veterinary clinic or boarding kennel in the city.

5. "Owner" means any person, partnership, corporation, or other legal entity owning, harboring, or keeping any dog, or in the case of a person under the age of 18, that person's parent or legal guardian.

C. Prohibitions.

1. No person shall own, harbor, keep, or maintain within the city limits any dangerous dog.

2. No person shall offer for sale, sell, give away, breed, buy, or attempt to buy any dangerous dog within the city.

3. No person shall own or harbor any dog for the purpose of dog fighting or use any dog for the purpose of causing or encouraging said dog to attack human beings or domestic animals when not provoked.

4. No person shall bring a dangerous dog onto any off-leash recreation area designated by the city.

5. No person shall obstruct, provide false information, or otherwise unreasonably interfere with officers of the department in the enforcement of this section or in the capture of any dog suspected of being dangerous.

D. Removal. The department, through the chief of police or his or her designee, may impound any dog suspected of being dangerous for a period not to exceed thirty (30) days and may, after considering application of the relevant evidence in subsection B. 2., determine the dog to be a dangerous dog.

1. If the dog is determined to be dangerous, the department shall order the dog removed from the city within five (5) days of the written order of the city.

2. If the dog is determined dangerous under subsection B. 2. a., the department may, in addition to the provisions of subsection D. 1., destroy the dog with the consent of the dog owner or commence an action to destroy the dog as provided in s. 174.02(3), Wis. Stats.

3. All orders of the city under this subsection shall be in writing and served upon or mailed to the owner of the dangerous dog at the owner's last known address. The city shall at all times maintain a current list of all known dangerous dogs for which orders have been issued.

4. A copy of all orders shall be filed at the time of service or mailing with the city clerk and the city clerk shall retain such orders with the dog license records. If a dangerous dog is unlicensed at the time of issuance of any order, the city clerk shall report it to the department.

5. The city clerk shall not issue a dog license to the owner of any dog determined to be dangerous under this section, except as authorized under subsection E.

6. The owner of any dog determined to be dangerous under this subsection shall be responsible for all costs associated with the impoundment, care or removal of the dog.

7. The city shall not assess the owner of a dog not determined to be dangerous any costs of impoundment or care under this subsection.

E. Duration of dangerous dog status.

1. Upon the petition of the owner of a dog that has been previously determined to be dangerous and later removed from the city under subsection D. 1., the city may remove the dog from its list of dangerous dogs if:

a. The owner demonstrates to the department that there have been no additional reported instances anywhere of the behavior, as defined in subsection B. 2., within a 36-month period from the date of the order to remove the dog from the city under subsection D. 1.; and

b. The owner of the dog demonstrates to the department that changes in circumstances or measures taken by the owner have mitigated the risk to public safety; and

c. The owner presents to the department proof from a dog training specialist accredited by the American Kennel Club (AKC) that the dog has been certified and passed the AKC canine good citizen program; and

d. The department concludes from all of the evidence presented that the dog does not present a risk to public safety.

2. The provisions of subsection E. 1. shall not apply to:

a. The owner of a dog that was removed from the city under subsection D. 1., was subsequently removed from the list of dangerous dogs under subsection E. 1., and was then removed from the city under subsection D. 1., a second time; or

b. The owner of a dog removed from the city under subsection D. 1. who is ineligible under subsection E. 2. a.

3. The city shall notify the petitioning owner in writing of all decisions under this subsection, and shall file a copy of all orders with the city clerk.

4. If a city order removes a dog from the list of dangerous dogs, the city may issue a dog license to the owner of that dog as of the date of the order.

F. Penalty. Any person who violates any part of subsection C. shall forfeit for each violation an amount not less than $60 nor more than $500, plus the costs of prosecution, including any expert testimony fees necessitated by enforcement of this subsection. Every day that any violation of this subsection C. continues shall be deemed a separate offense.

G. Repeat offenders. Any person that repeatedly violates any part of subsection C. shall forfeit an amount double the deposit set forth in subsection F. Every day that any violation of this subsection continues shall be deemed a separate offense.

H. Exemptions. The provisions of this section shall not apply to dogs owned by law enforcement agencies and used for law enforcement purposes.

I. Severability. If any part of this section is found to be unconstitutional or otherwise invalid, the validity of the remaining parts shall not be affected. (Ord. 7067§1, 2013; Ord. 6703 §1, 2006).

6.08.050 Quarantine and disposition of rabid animals. A. Any dog, cat, or ferret which is known to be or if good reason exists to believe such animal is mad, rabid, vicious or dangerous to the public, shall be impounded and disposed of according to law.

B. In all cases hereunder, if any dog, cat, or ferret is found to exhibit signs of rabies, it shall be destroyed and no person shall interfere with the city authorities or agents in carrying out their duties in this regard. All expenses thus incurred shall be paid by the owner or the person having custody of such dog, cat, or ferret.

C. Any dog, cat, or ferret which has bitten any person and which shows evidence of a current rabies inoculation shall be quarantined at such place as designated by the health department for a minimum period of ten days. The dog, cat, or ferret shall be examined by a licensed veterinarian within 24 hours of a quarantine notice and again on the tenth day after the bite. If, in the opinion of the health department, the vaccinated animal cannot be confined securely at the residence of its owner or custodian, or exhibits signs of illness as determined by a licensed veterinarian, the dog, cat, or ferret shall be quarantined at a veterinary hospital under the supervision of a licensed veterinarian.

D. Any dog, cat, or ferret which has bitten any person and which does not display evidence of rabies inoculation shall be quarantined within 24 hours of the quarantine order at a veterinary hospital under the supervision of a licensed veterinarian for a minimum of ten days. "Supervision of a licensed veterinarian" includes, at a minimum, examination of the animal on the first day of isolation and on the last day of isolation. If the veterinarian certifies that the dog, cat, or ferret has not exhibited any signs of rabies, the animal may be released from quarantine at the end of the observation period. After such period of time, such veterinarian shall report his/her determination or findings thereof in writing to the health department.

E. Any domesticated wild animal that has bitten any person, inclusive of, but not limited to, wolf-dog hybrids, skunks and raccoons, shall be immediately destroyed by a licensed veterinarian and the proper specimen from the animal tested for rabies by the state lab of hygiene. All expenses connected therewith shall be charged to the owner or custodian of the animal.

F. If a dog, cat, or ferret is ordered to be quarantined because there is reason to believe the animal has been exposed to a rabid animal, and if the dog, cat, or ferret is not currently immunized against rabies, the custodian of an isolation facility or the owner shall keep the animal leashed or confined for 180 days. The owner shall have the animal vaccinated against rabies between 155 and 165 days after exposure to a rabid animal.

G. If a dog, cat, or ferret is ordered to be quarantined because there is reason to believe the animal has been exposed to a rabid animal, and if the dog, cat, or ferret is immunized against rabies, the custodian of an isolation facility or the owner shall keep the animal leashed or confined for 60 days. The owner shall have the animal re-vaccinated against rabies as soon as possible after exposure to a rabid animal.

H. No person shall keep or harbor any dog or other domesticated animal which is known to be or when there is good reason to believe the same to be mad, rabid, vicious or dangerous to the public,

I. The provisions of s. 95.21, 173.23 and 174.02(3)is. Stats., insofar as applicable, and any amendments thereto, are incorporated by reference and made a part of this section with the same force and effect as those provisions set forth verbatim herein. (Ord. 7031 §2, 2012; Ord. 6703 §2, 2006; Ord. 5798, 1998; Ord. 5606 §1, 1996; Ord. 3392 §IV, 1973; Prior code §12.01(g)).

6.08.055 Vaccination. A. The owner of a dog or cat shall have the animal vaccinated by a licensed veterinarian on or before the date the animal reaches five months of age.

B. An owner who imports an animal into Eau Claire county that has reached five months of age must have the animal vaccinated by a licensed veterinarian as evidenced by a current certificate of rabies vaccination from this state or another state.

C. The owner of a dog or cat shall have the animal vaccinated:

1. Within one year after initial vaccination; or
2. Before the date that the immunization expires, as stated on the certificate; or

3. Within one year after the previous vaccination, if no date is specified on the certificate. (Ord. 5606 §2, 1996).

6.08.060 Animal excreta. The owner or person in charge of an animal shall promptly remove and dispose of in a sanitary manner any excreta deposited by such animal upon any public or private property. (Ord. 5095 §1, 1990; Ord. 3864 §11(part), 1978).

6.08.070 Violation--Penalty. Any person who violates any provision of this chapter shall forfeit not less than ten dollars nor more than one hundred dollars for each offense and, in default of payment thereof, shall be committed to the county jail of Eau Claire County. (Ord. 4072 §1, 1980; Ord. 3864 §11(part), 1978).

Chapter 6.10

PET SHOPS AND KENNELS

Sections:

6.10.010 Definition.
6.10.015 State law adopted.
6.10.020 License required--Application--Term.
6.10.030 Operation.
6.10.040 Revocation--Suspension--Appeal.
6.10.050 Violation--Penalty.

6.10.010 Definition. In this chapter:

A. "Pet shop" means any business enterprise which regularly engages in raising, training, buying, selling or boarding of any species of animal, except doges, for hire or profit, but not including an animal hospital.

B. "Kennel" means any establishment wherein or whereon dogs are kept for the purpose of breeding, sale or sporting purposes. (Ord. 5684 §1, 1997; Ord. 3864 §12(part), 1978).

6.10.015 State law adopted. The provisions of Wisconsin Statutes Section 174.053 are adopted and made a part of this chapter by reference. (Ord. 4155 §2, 1981).

6.10.020 License required--Application--Term. A. No person shall operate a pet shop or kennel without first obtaining a license from the city clerk. The license shall not be transferable between persons or locations. A written application for such license shall be filed with the city clerk, which shall contain the name and address of the applicant, the location of the proposed pet shop or kennel and such other information as may be required by the clerk.

B. The license year for a pet shop license shall be from July 1 to June 30. The annual license fee shall be as stated in the City of Eau Claire Fees and Licenses Schedule.

C. The license year for a kennel license shall be from January 1 through December 31. The annual license fee for a kennel license shall be as stated in the City of Eau Claire Fees and Licenses Schedule. (Ord. 6363 §24, 2002; Ord. 5684 §§2, 3, 1997; Ord. 3864 §12(part), 1978).

6.10.030 Operation. Every pet shop and kennel, including all places of confinement and all other facilities therein, shall be maintained in a clean and sanitary condition, and no refuse or waste material shall be allowed to accumulate thereon which is detrimental to the animals in the pet shop or kennel. All animals kept thereon shall be humanely treated and confined. Any animal having any disease shall be properly isolated and treated and shall not be sold. (Ord. 3864 §12(part), 1978).

6.10.040 Revocation--Suspension--Appeal. A license issued under this chapter may be revoked or suspended by the city clerk during its term for failure or refusal to comply with the

provisions of this chapter or with any other governmental law, rule or regulation governing the keeping or protection of animals. A license may be suspended for not exceeding two days, without notice or hearing, in the event of a violation of this chapter which presents an immediate and extensive danger to the health, safety or welfare of persons or animals. A license may be suspended for longer than two days or revoked, and the licensee shall be entitled to an appeal from the afore stated determination to the administrative review board under the procedures specified in ch. 1.06. During suspension, no sales of pets or other business or transactions involving such pets shall be performed by the licensee, but the provisions of Section 6.10.030 shall continue to apply to the licensed premises. Within ten days following revocation, all pets shall be humanely disposed of and no part of the license fee shall be refunded. Appeals shall stay the contested administrative determination pending decision by the board, but the provisions of this chapter shall continue to apply. (Ord. 6572 §14, 2005; Ord. 3864 §12(part), 1978).

6.10.050 Violation--Penalty. Any person who violates any provision of this chapter shall forfeit not less than twenty-five dollars nor more than one hundred dollars for each offense and, in default of payment thereof, shall be committed to the county jail of Eau Claire County. (Ord. 3864 §12(part), 1978).

Chapter 6.11

TREATMENT OF ANIMALS

Sections:

6.11.010 Care of animals.
6.11.020 Violation--Penalty.

6.11.010 Care of animals. A. Cruelty. In this section, "cruel" means causing unnecessary pain or suffering or unjustifiable injury or death. No person may treat any animal, whether belonging to such person or another person, in a cruel manner. This section does not prohibit bona fide experiments carried on for scientific research or normal and accepted veterinary practices.

B. Use of Poisonous and Controlled Substances. No person may expose any domestic animal to any known poisonous substance listed in Wisconsin Statutes, Section 161.14, whether mixed with meat or other food or not, so that the substance is liable to be eaten by the animal and for the purpose of harming the animal. This section shall not apply to poison used on one's own premises for the purpose of rodent or pest extermination nor to the use of controlled substances in bona fide experiments carried on for scientific research or in accepted veterinary practices.

C. Feed, Shelter, Treatment. Each owner or person in charge of an animal shall provide his or her animals with sufficient good and wholesome food and water, proper shelter and protection from the weather, veterinary care when needed to prevent suffering, and shall provide humane care and treatment.

D. Instigating Fights Between Animals. No person may instigate, promote, aid or abet as a principal, agent, employee or spectator, or participate in the earnings from, or intentionally maintain or allow any place to be used for a cockfight, dog fight, bullfight or other fight between the same or different kinds of animals or between an animal or a person. This subsection does not prohibit events or exhibitions commonly featured at rodeos. No person may own, possess, keep or train any animal with the intent that the animal be engaged in an exhibition of fighting.

E. Abandonment. No owner of an animal shall intentionally abandon such animal.

F. Striking Animal. Any person who, as the operator of a motor vehicle, strikes a domestic animal shall stop at once and shall immediately report such injury or death to the animal's owner, if the ownership can be ascertained. In the event the owner cannot be ascertained and located such operator shall at once report the accident to the appropriate law enforcement agency or to the local humane officer or association. (Ord. 5095 §2, 1990; Ord. 3864 §13(part), 1978).

6.11.020 Violation--Penalty. Any person who violates any provision of this chapter shall forfeit not less than twenty-five dollars nor more than one hundred dollars for each offense and, in default of payment thereof, shall be committed to the county jail of Eau Claire County. (Ord. 3864 §13(part), 1978).

Chapter 6.12

KEEPING CERTAIN ANIMALS

Sections:

6.12.010 Prohibited animals.
6.12.015 Snakes.
6.12.020 Cattle and goats.
6.12.030 Swine.
6.12.040 Cows, swine and goats to be registered.
6.12.060 Barnyard sanitation.
6.12.070 Violation--Penalty.

6.12.010 Prohibited animals. A. No person, firm, corporation, partnership, or limited liability company shall keep, feed, or breed any fur bearing animal, game animal, or game bird as defined in sec. 29.001(30), (36) and (39), Wisconsin Statutes.

B. No person, firm, or corporation shall keep, feed, or breed any member of the feline family, other than domestic cats.

C. No person, firm, or corporation shall keep, feed, or breed any domestic fowl , except as provided in Chapter 6.15

D. This section shall not apply to domestic rabbits, defined as those rabbits that are normally born and raised in captivity.

E. This section shall not apply to animals in the possession of a wildlife rehabilitator who is licensed by the state of Wisconsin, Department of Natural Resources, while such animal is being lawfully nurtured or rehabilitated for release in the wild. No animal may be kept under this exception for a period of more than 55 days. No animal may be kept under this exception that poses a danger to the community. (Ord. 7307 §2, 2018; Ord. 7031 §3, 2012; Ord. 6113, 2000; Ord. 5283 §1, 1992; Ord. 4504, 1984; Prior code §12.02).

6.12.015 Snakes. A. For purposes of this section, “poisonous” shall mean having the ability to cause serious harm or death by the transfer of venom or poison to a person or animal.

B. No person shall keep or possess any snake in the city which is poisonous or in excess of 10 feet in length. This prohibition shall not apply to bona fide zoos, educational institutions or exhibitions keeping such snakes for display or for instructional or research purposes. Any person legally possessing any such animal in this capacity shall notify the chief of police in writing of the location and type of snake being kept and the purpose for such possession. (Ord. 5886, 1998).

6.12.020 Cattle and goats. The keeping of cattle or goats within the city is forbidden, except in the outlying districts which are essentially rural, and in such districts the same shall be kept in a barn or stable distant from any neighbor's dwelling or store as follows: Any single critter shall be kept at a distance of not less than seventy-five feet, and any larger number of cattle or goats shall be kept at a distance of not less than two hundred feet. (Prior code §12.03).

6.12.030 Swine. The keeping of swine of any size within the city is forbidden, except in the outlying districts which are essentially rural, and in such districts the same shall be kept in barns or structures not less than two hundred feet distant from any neighbor's dwelling or store. (Prior code §12.04).

6.12.040 Cows, swine and goats to be registered. All swine, cows and goats shall be registered immediately by their possessor with the department of health. Such possessor shall notify

in writing the department of the death or loss of any such animal or its transfer from one person to another. Such possessor shall likewise at any time give such information in writing to said department as it may require. (Prior code §12.05).

6.12.060 Barnyard sanitation. A. All places and structures wherein any animal is kept shall be maintained in a clean and sanitary condition and shall at all times be subject to inspection and such reasonable regulations as to its maintenance and location as the department of health may make.

B. Manure. For provisions regarding manure see Section 8.32.160. (Ord. 5283, §3, 1992; Prior code §12.07).

6.12.070 Violation--Penalty. Any person who violates any of the provisions of this chapter or any regulation or order made therein, shall, upon conviction, forfeit not more than fifty dollars and in default of payment of said forfeiture and costs shall be imprisoned in the county jail not exceeding fifteen days. (Prior code §12.10).

Chapter 6.14

"KEEPING OF HONEY BEES"

Sections:

6.14.010 Purpose.
6.14.020 Definitions.
6.14.030 Permit and Fee Required.
6.14.040 Conditions and Exemptions for Keeping and Maintaining Hives.
6.14.050 Standards of Practice.
6.14.060 Inspection and Enforcement.
6.14.070 Violation and Penalty.

6.14.010 Purpose. The purpose of this article is to establish certain requirements of sound beekeeping practice intended to prevent problems associated with the keeping of bees in populated areas, and to reduce the likelihood of a private or a public nuisance.

6.14.020 Definitions. For the purposes of this chapter, the following terms have the meaning indicated:

A. "Apiary" shall mean the assembly of one (1) or more colonies of honey bees at a single location.

B. "Beekeeper" shall mean a person who owns or has charge of one (1) or more colonies of honey bees.

C. "Beekeeping equipment" shall mean any item used in the operation of an apiary, such as hive bodies, supers, frames, top and bottom boards and extractors.

D. "Colony" shall mean an aggregate of honey bees consisting principally of workers, but having, when perfect, one (1) queen and at times drones, brood, combs, and honey.

E. "Hive" shall mean the receptacle inhabited by a colony that is manufactured or created for that purpose.

F. "Honey bee" shall mean all life stages of the common domestic honey bee, *Apis mellifera* species of European origin.

G. "Lot" shall mean a contiguous parcel of land under common ownership.

H. "Nucleus colony" shall mean a small quantity of honey bees with a queen housed in a smaller than usual hive box designed for a particular purpose.

I. "Undeveloped property" shall mean any idle land that is not improved or not in the process of being improved with residential, commercial, industrial, church, park, school or governmental facilities or other structures or improvements intended for human occupancy and the grounds maintained in associations therewith.

6.14.030 Permit and Fees Required. A. Persons that keep bees within the limits of the city must first obtain a permit. No person shall keep, maintain, or allow to be kept any hive or other facility for the housing of honey bees on or in any property in the City of Eau Claire without a permit.

B. Applications for a permit to keep or maintain bees will be made on such forms as provided by the City.

C. A permit fee shall be as stated in City of Eau Claire Fees and Licenses Schedule. Applicants shall also pay any and all applicable inspection fees including, but not limited to, health department inspection fees.

D. Permits shall not be transferable or refundable. Only the owner of the proposed permitted real property, or an occupant of the proposed permitted real property with the owner's written permission, is eligible to obtain a beekeeping permit.

E. All permits issued shall expire on December 31st of the year following issuance unless sooner revoked.

F. Applicants shall provide the following information on the original application and with each renewal as indicated:

1. A detailed lot diagram of the beekeeping equipment location including the distances to property lines and from nearby structures on neighboring properties, and on any renewal only if the applicant intends to increase the number or relocate any of the hives on the property from the previous permit.

G. New permits may only be granted subject to the successful completion of the City-County Health Department pre-inspection. Permit renewals may only be granted subject to the successful completion of at least one annual inspection by a State Apiary Inspector or at least one annual inspection by a member of a local beekeeping organization approved by the City-County Health Department. Renewal applicants shall provide written documentation evidencing inspection(s).

H. Written notification to all owners and occupants of real estate situated within fifty (50) feet of the applicant's proposed hive location or abutting the applicant's property shall be provided annually by the City. Property owners and occupants receiving notification may object in writing to the issuance or renewal of a license within fourteen (14) days of notification issuance.

1. The issuance or renewal of a license shall be denied if:

a. at least forty (40) percent of notified properties object to the issuance or renewal of a license; or

b. a resident of a notified property has a medically documented allergy and objects to the issuance or renewal of a license.

2. Large acreage exemption. When the proposed location of the beekeeping equipment and hives is within a lot greater than four (4) acres in size, the applicant is exempt from the above notification requirement if the applicant demonstrates that the beekeeping equipment and hives is greater than two hundred fifty (250) feet away from any property line. (Ord. 7320 §1, 2019; Ord. 7276, 2018)

6.14.040 Conditions and Exemptions for Keeping and Maintaining Hives.

A. Approval of all applications is subject to reasonable restrictions, limitations, conditions, or prohibitions prescribed by the City-County Health Department in consultation with the City Zoning, Forestry, Fire, and/or Police Departments. Any approved permit shall specify any restrictions, limitations, conditions or prohibitions deemed necessary by the health department to safeguard public health and the general welfare, and deemed necessary to reduce the likelihood of public or private nuisance.

B. The number and location of hives, colonies and/or beekeeping equipment used for the housing of honey bees permitted by this section shall be determined by a permit issued by the City of Eau Claire.

C. Beekeeping equipment shall be restricted to rear-yards and side-yards and shall be screened to avoid being visible from the street or sidewalk. Beekeeping equipment may also be permitted on a roof provided such equipment is screened from view and is determined by the health department to otherwise meet the setback and other requirements of this chapter.

D. Beekeeping equipment shall not be allowed on lots with two or more dwelling units unless the health department approves an exemption. An exemption may only be granted where unique circumstances exist in which the keeping of bees is otherwise consistent with both the purpose and

requirements of this ordinance and will not interfere with any person's use or enjoyment of the property that person occupies. An exemption may be granted with special conditions and requirements to ensure beekeeping is consistent with the purpose and requirements of this ordinance.

E. Non-honey bees do not qualify for a permit and are not permitted to be kept within the City of Eau Claire.

F. Beekeeping equipment shall not be located closer than ten (10) feet from any side-yard property line, five (5) feet from any rear-yard property line, fifteen (15) feet from a public sidewalk, nor twenty-five (25) feet from a principal residential dwelling on an abutting lot.

6.14.050 Standards of Practice. Any person obtaining a permit pursuant to this section shall comply with the following standards of practice:

A. Honey bee colonies shall be kept in hives with removable frames, which shall be kept in sound and usable condition. A hive shall not exceed 15 cubic feet in size.

B. Each beekeeper shall ensure that a sufficient and convenient source of water is available to the colony.

C. Each beekeeper shall ensure that no wax comb or other materials that might encourage robbing by other bees are left upon the grounds of the apiary lot. Such materials once removed from the site shall be handled and stored in sealed containers, or placed within a building or other insect-proof container.

D. For each colony permitted to be maintained under this ordinance, there may also be maintained upon the same apiary lot, one (1) nucleus colony in a hive structure not to exceed one (1) standard nine and five-eighths (9-5/8) inch depth ten-frame hive body with no supers.

E. Each beekeeper shall maintain beekeeping equipment in good condition, including keeping the hives painted, and securing unused equipment from weather, potential theft or vandalism and occupancy by
swarms. It shall be a violation of this section for any beekeeper's unused equipment to attract a swarm, even if the beekeeper is not intentionally keeping honey bees.

F. In apiaries the beekeeper shall conspicuously post a sign including the words "HONEY BEE HIVE" and his/her name and telephone number clearly readable at twenty-five (25) feet. A copy of the permit shall be placed in a conspicuous place on the hive.

G. City of Eau Claire staff shall have the right to inspect any permitted beekeeping equipment between 8 a.m. and 5 p.m. Where practicable, prior notice shall be given to the beekeeper.

H. A flyway barrier six (6) feet in height shall shield any part of a property line that is within twenty-five (25) feet of a hive. The flyway barrier shall consist of a wall, fence, dense vegetation or a combination thereof.

1. Exemptions.

a. A flyway barrier is not required if all property adjoining the apiary lot line is undeveloped, or is zoned agricultural or non-residential, or is a wildlife management area or naturalistic park land with no horse or foot trails located within twenty-five (25) feet of the apiary lot line.

b. The health department may provide a flyway barrier exemption if the hives are located on the roof of a structure containing at least one (1) full story if all hives are located at least five (5) feet from the side of the structure and at least fifteen (15) feet from any adjacent and occupied structure.

c. The health department may approve a shorter flyway barrier if necessary to comply with zoning or other land use restrictions where a shorter flyway barrier will not increase the likelihood of public or private nuisance.

I. No person is permitted to keep more than the following numbers of colonies on any lot within the city, based upon the size or configuration of the apiary lot:

1. One-half (1/2) acre or smaller lot: Two (2) colonies with an allowance for a temporary additional nucleus colony.

2. Larger than one-half (1/2) acre but smaller than three-quarter (3/4) acre lot: Four (4) colonies.

3. Larger than three-quarter (3/4) acre lot but smaller than one (1) acre lot: Six (6) colonies.

4. One (1) acre but smaller than ten (10) acres**:** Eight (8) colonies.

5. Ten (10) acres or larger but smaller than forty-nine (49) acres: One (1) colony per acre.

6. Forty-nine (49) acres or larger: Forty-nine (49) colonies.

7. If the beekeeper serves the community by removing a swarm or swarms of honey bees from locations where they are not desired, the beekeeper shall not be considered in violation the portion of this ordinance limiting the number of colonies if he/she temporarily houses the swarm on the apiary lot in compliance with the standards of practice set out in this ordinance for no more than 30 days from the date acquired. A beekeeper engaging in such a practice shall only qualify for this subsection's exemption if the beekeeper provides the City of Eau Claire written notification within seventy-two (72) hours of engaging in such an action.

8. Contiguous apiary lots under common ownership shall be combined for purposes of this chapter. Setback provisions contained in section 6.14.040 shall not be applicable to those property lines creating the contiguous portion of an apiary lot.

J. Hives not under active management and maintenance shall be dismantled or removed by the most recent permit holder.

K. In any instance in which a hive exhibits unusually aggressive characteristics, the beekeeper shall destroy or re-queen the hive. Queen shall be selected from stock bred for gentleness and non-swarming characteristics. Unusual aggressiveness shall be determined by the health department director or her or his designee. (Ord. 7320 §2, 2019; Ord. 7320, 2019).

6.14.060 Inspection and Enforcement. A. The health department, the city building inspector or his or her designee, the zoning administrator or his or her designee, and the police department may issue compliance orders and citations pursuant to the provisions of this chapter, city code and state law.

B. Violations of this chapter may constitute a public nuisance under Chapter 9.36 of this Code, or under Wisconsin Statutes Chapter 823. Nothing in this chapter shall be construed as prohibiting the abatement of public nuisance by the City of Eau Claire or its officials in accordance with the laws of the State of Wisconsin, the laws of the United States, or the City of Eau Claire code of ordinances. This chapter shall also not be construed as otherwise limiting, in any way, any other action the City of Eau Claire is permitted to bring under the laws of the State of Wisconsin, the laws of the United States or under the City of Eau Claire code of ordinances

6.14.070 Violation and Penalty. Any person who violates this chapter shall, for each violation, forfeit not less than fifty (50) dollars nor more than two hundred (200) dollars not including court costs. Each day such violation continues shall constitute a separate offense. (Ord. 7122, 2015).

Chapter 6.15

KEEPING OF POULTRY

Sections:

6.15.010 Purpose.
6.15.020 Definitions.
6.15.030 License Required.
6.15.040 Property Requirements and Coop Design.
6.15.050 Conditions for Keeping and Sanitation.
6.15.060 Inspection and Enforcement.
6.15.070 Other methods not excluded.
6.15.080 Violation and Penalty.

6.15.010 Purpose. The purpose of this chapter is to outline conditions under which city

residents in certain residential districts may safely keep and maintain a limited number of allowable poultry to provide eggs for household use; to assure appropriate coops or structures in which to house poultry; and to protect the health, safety, and welfare of the general population of the City of Eau Claire. (Ord. 7307, 2018)

6.15.020 Definitions. For the purposes of this Chapter, the following terms have the meaning indicated:

A. "Abutting property" shall mean all lots that the applicant's property comes into contact with at one or more points, except for lots that are legally abutting but separated from the applicant's property by a public or private street, alley or other right-of-way.

B. "Poultry" shall mean, for purposes of this ordinance, a female gallinaceous bird or hen of any age, including chicks. This definition includes quail but excludes waterfowl, pheasant, geese, turkeys, peacocks, emus or ostriches.

C. "Coop" shall mean an enclosed structure, building or pen within which poultry roost or are housed.

D. "Health Department" shall mean the Eau Claire City-County Health Department.

E. "Run/Enclosure" shall mean the fenced or enclosed outdoor space provided for poultry. Runs/Enclosures shall be fully enclosed, including the top and all sides.

F. "Residential structure" shall mean any building located on a residentially zoned property, including a detached garage or shed. (Ord. 7307, 2018)

6.15.030 License Required.

A. No person shall own, harbor, keep, or maintain poultry within the corporate limits of the city without first obtaining a license. Construction of a coop shall not commence until an application for a license has been submitted.

1. Applications for a license shall be made prior to acquiring a licensable poultry, on such forms as provided by the city.

2. Applicants shall register with the Wisconsin Department of Agriculture, Trade and Consumer Protection pursuant to §95.51, Wis. Stats., and provide proof of registration with the Department prior to obtaining a city license.

3. Applicants shall state on the licensing application the number of planned poultry, the plan to dispose of manure and other waste, as well as their intended coop design and materials plan including a diagram describing the location of the coop and any attached run/enclosure in relationship to lot boundaries and nearby structures, and on any renewal only if the applicant intends to increase the number of poultry or relocate the coop structure on the property from the previous license.

4. The city shall provide written notification to all owners of real estate within 100 feet of the applicant's property. Owners of abutting property to that of the applicant may object in writing to the issuance or the renewal of a license within fourteen (14) days of notification issuance. If an objection is received, the license shall be presented to the city council for consideration.

5. Applicant shall pay a license fee as provided in the City of Eau Claire Fee and License Schedule with application.

6. Applicant shall certify that the poultry and poultry products are primarily for personal non-commercial use. No commercial sales from the residence or any residential area within the city is permitted.

7. An inspection of the completed coop shall be completed by the Health Department or city staff prior to license issuance and thereafter of the coop and any poultry prior to license renewal or upon credible complaint or as determined necessary. Applicant or licensee shall pay any applicable inspection fee as provided in the City of Eau Claire Fee and License Schedule.

8. Licenses shall be issued for a term of one year, commencing with the first day January and expiring on December 31. Failure to renew a license in a timely manner may result in citations and the issuance of a late fee. (Ord. 7307, 2018)

6.15.040 Property Requirements and Coop Design. A. Property Requirements.

1. Poultry shall only be kept and maintained on a lot zoned R-1 and used as a single-family dwelling, except that poultry may be kept on a lot zoned R-2 and used as a multi-family dwelling if the applicant does all of the following:

a. Submits a written statement of support to the city signed by the landlord or property owner and all other tenants within the dwelling.

b. Submits a written agreement between landlord or property owner and applicant, as to the plans for maintenance of the coop and poultry and their disposition after the applicant vacates the premises.

2. Poultry shall not be kept or maintained upon a vacant lot or inside a residential structure, including basements, porches, garages, shed, or similar storage structure.

3. A coop and any attached run/enclosure shall be located in the back or side yard of the license holder's residence.

4. A coop and any attached run/enclosure shall be located at least ten (10) feet from an abutting lot, at least twenty-five (25) feet from any residential structure on adjacent lots, at least five (5) feet from any residential structure on the applicant's lot, and at least two (2) feet from all lot lines.

5. Contiguous lots under common ownership shall be combined for purposes of this chapter. Setback provisions contained in this section shall not be applicable to those property lines creating the contiguous portion of a lot.

B. Coop Design.

1. All poultry shall be kept and maintained within a detached, stationary structure used exclusively for the keeping of poultry. Temporary or movable devices and structures shall be prohibited.

2. Coops shall be constructed in a skillful manner, including being ventilated, insulated, roofed, constructed of moisture resistant materials, and in compliance with current city building and zoning ordinances.

3. The coop's structural floor area shall not exceed sixty-four (64) square feet, and the height of the coop shall not exceed eight (8) linear feet as measured vertically from the coop's grade level to the outside highest point of the coop.

4. The coop floor, foundation and footings shall be constructed using a hard, cleanable surface, (e.g., concrete, wood, linoleum, or hard plastic) and shall be resistant to rodents. A dirt floor is not acceptable.

5. All coops, including run/enclosure, shall be enclosed with wire netting or equivalent material including a protective overhead that will prevent poultry from escaping the coop or the attached run/enclosure.

6. All coops and attached structures shall be sized to provide a minimum of three (3) square feet per bird.

7. License information shall be attached to the coop, including the name of the license holder, license number, and an emergency contact telephone number. (Ord. 7307, 2018)

6.15.050 Conditions for Keeping and Sanitation. A. Conditions for Keeping.

1. A person keeping or maintaining poultry on residential property:

a. Shall keep or maintain not more than five (5) total poultry.

b. Shall keep or maintain poultry within a coop or attached coop run/enclosure at all times.

c. Shall not keep or maintain any roosters, cocks, or drakes.

2. Poultry shall be provided with access to feed and clean, water at all times.

3. Poultry that become ill shall receive veterinary care on-site or at a veterinary office. Poultry ill with an infectious disease capable of being transmitted from bird to bird or from birds to humans, including but not limited to, salmonella, avian influenza, are prohibited and shall be immediately euthanized by a veterinarian or immediately removed from the city and humanely killed outside of the city. Any person keeping poultry shall immediately report any unusual illness or death of poultry to the Health Department.

4. The Health Officer may order testing, quarantine, isolation, vaccination or humane euthanasia of ill poultry or poultry believed to be a carrier of a communicable disease per DHS 145.06(6), Wis. Stats.

5. A dog or cat which kills or injures a bird shall not, for that reason alone, be considered a dangerous animal under Chapter 6.08 of this Code.

6. Deceased birds shall be disposed of immediately in a safe manner, which may include trash disposal after placing the deceased bird in in a sealed bag.

7. All waste including manure shall be disposed of in a safe and adequate manner that does not create a public nuisance. Composting of manure shall be done in a dedicated, enclosed container at least twenty-five (25) feet from any residential structure on adjacent lots, at least five (5) feet from any residential structure on the permitted lot, and at least two (2) feet from all lot lines.

8. The slaughtering of any permitted poultry may be conducted on the property only if conducted in a humane and sanitary manner, outside of the view of any public area or adjacent property, in accordance with all applicable laws, rules, and regulations, and for personal use only. A maximum of five (5) total poultry may be slaughtered on the property in a license year. This shall not constitute animal cruelty for purposes of Chapter 6.11 of this Code.

a. Culling of poultry for non-meat purposes shall be prohibited, except as may otherwise be required by this chapter.

9. Poultry shall be secured within a coop during non-daylight hours.

10. Poultry shall not roam free outside of a coop or attached run/enclosure, or off of the permitted property.

11. No person may keep or harbor any poultry, which habitually by any noise disturbs the peace and quiet of any person in the vicinity.

12. Coops shall be entirely removed from the property within ninety (90) days of the nonrenewal of a license.

13. Offsite sale of eggs is prohibited except as otherwise permitted by the State of Wisconsin and United States Department of Agriculture. All distribution of eggs shall be documented, including the names, address, and phone number of receiving individuals.

B. Sanitation.

1. Poultry feed shall be stored and kept in containers which make the feed unavailable to rodents, vermin, wild birds and predators.

2. All coops, attached runs/enclosures and yards where poultry are kept or maintained shall be cleaned regularly to keep them reasonably free from substances, including but not limited to manure, uneaten feed, feathers, and other such waste that it does not cause the air or environment to become noxious or offensive or to be in such condition as to promote the breeding of flies, mosquitoes, or other insects, or to provide habitat, breeding or feeding place for rodents or other animals, or otherwise be injurious to public health.

3. Poultry shall be kept and handled in a sanitary manner to prevent the spread of communicable diseases among birds or to humans. (Ord. 7307, 2018)

6.15.060 Inspection and Enforcement.

A. License fees shall not be prorated or refundable.

B. City and Health Department staff shall have the power, whenever it may deem reasonably necessary, to enter a building, structure, or property related to a license under this chapter to ascertain whether the license holder is in compliance with this chapter. Compliance orders and citations may be issued pursuant to the provisions of this chapter, City Code and State law.

C Violations of this chapter may constitute a public nuisance under Chapter 9.36 of this Code, or under Wisconsin Statutes Chapter 823. The city may maintain an action to recover damages or abate a public nuisance pursuant to Chapter 9.36 of this Code or Wisconsin Statutes Chapter 823.

D. A license issued hereunder may be revoked by the city clerk upon determination that the licensee has failed to comply with the provisions of this chapter, this code, or state law, or the poultry or premises has been declared a public nuisance. Once a license has been revoked, it shall not be reissued for a period of at least two years.

E. Appeals from orders of the Health Department for compliance shall be pursuant to Health Department policy in conformance with the procedures for conducting appeals enumerated in Section 68, Wisconsin Statutes. All other orders are appealable pursuant to city code or as

otherwise provided by law. An appeal does not limit the city's right to seek court intervention in the form of injunctive or other relief.

F. Licenses shall not be transferable. Only the owner of the proposed licensed real property, or an occupant of the proposed licensed real property with the owner's written permission, is eligible to obtain a poultry keeping license. (Ord. 7307, 2018)

6.15.070 Other methods not excluded. The provisions of this chapter are not exclusive and may be used in combination with each other or with any other section of this code or state statute applicable to this subject matter. (Ord. 7307, 2018)

6.15.080 Violation and Penalty. Any person who violates the provisions of this chapter shall upon conviction thereof, forfeit not less than $60 (Sixty) and not more than $500 (Five Hundred) per day of violation, if applicable, together with the costs of prosecution. (Ord. 7307, 2018)

Chapter 6.16

PIGEONS

Sections:

6.16.010 Definitions.
6.16.060 Conditions for keeping and maintaining.
6.16.070 Violation--Penalty.

6.16.010 Definitions. The following definitions shall apply only in the interpretation and enforcement of this chapter:

A. "Loft" includes any and all quarters in which pigeons are housed.

B. "Pigeon" includes any and all varieties and breeds of pigeons.

C. This chapter shall apply to the keeping and harboring of pigeons for any purpose within the corporate limits of the city of Eau Claire. (Ord. 5207 §2, 1992; Prior code §12.11(1)).

6.16.060 Conditions for keeping and maintaining. It is a violation of this chapter for any person, firm or corporation to harbor, keep or maintain pigeons upon other than the following conditions unless varied by provisions of chapter 18.35:

A. No loft, coop or other place for keeping or confining pigeons shall be maintained or operated in any manner which violates the city building code or zoning ordinance.

B. All premises on which pigeons are kept and maintained shall be kept reasonably clean and free from filth, garbage and such substances which attract rodents at all times.

C. All pigeons shall be fed within the confines of the loft or premises on which pigeons are housed.

D. All grains and food stored for the use of pigeons shall be kept in rodent-proof containers.

E. Pigeons shall be exercised and permitted to fly only when under the control of the person, firm or corporation harboring, keeping, or maintaining said pigeons.

F. All aviaries shall be completely enclosed with wire netting or equivalent material that will prevent pigeons from escaping the confines of the loft or coop.

G. The loft floor area shall not exceed two hundred square feet.

H. The outline of the loft to house said pigeons shall be of such design to conform with the symmetry of the existing buildings.

I. Any loft housing pigeons shall be elevated a minimum of six inches and maximum of twelve inches above grade to insure free-way beneath the loft; further, the loft shall rest upon concrete footings and piers, cement blocks, or other suitable foundation material. Any loft built expressly to house pigeons shall have a maximum height of nine feet.

J. The property upon which pigeons are kept shall have established a principal use conforming to the zoning ordinance. (Ord. 6948, 2011; Ord. 5207 §§3, 4, 5, 1992; Prior code §12.11(2)(e)).

6.16.070 Violation--Penalty. Any person who violates any of the provisions of this chapter shall forfeit a penalty not exceeding twenty-five dollars and the costs of prosecution for each and every offense, and in default of payment thereof, shall be committed to the county jail of Eau Claire County until such forfeiture and costs are paid, not exceeding ten days, unless said forfeiture and costs and expenses of prosecution are sooner paid. (Prior code §12.11(2)(f)).

Chapter 6.20

SQUIRRELS

Sections:

6.20.010 Protection.
6.20.020 Nest--Molesting unlawful.
6.20.030 Dogs--Hunting squirrels prohibited.
6.20.040 Traps--Unlawful.

6.20.010 Protection. No person shall at any time or place within the city kill or injure any squirrel of any kind, except for the activities undertaken by, or with permission of, the director of community services pursuant to Section 9.76.120, with required permission having been obtained from appropriate authorities. (Ord. 7202, 2016; Ord. 3827, 1977; Ord. 3462 §1, 1974; Prior code §12.08(a)).

6.20.020 Nest--Molesting unlawful. No person shall at any time destroy, injure or in any manner interfere with the nest, whether natural or artificial, or the box or house of any squirrel of any kind. (Prior code §12.08(b)).

6.20.030 Dogs--Hunting squirrels prohibited. No person shall knowingly permit any dog, within his charge or control, to hunt, worry, injure or in any manner molest any squirrel of any kind within the city. (Prior code §12.08(c)).

6.20.040 Traps--Unlawful. No person shall at any time set, lay or prepare any trap or other contrivance or device whatever with the intent to kill any squirrel of any kind within the city, whether the same are caught or not. (Ord. 3462 §2, 1974; Prior code §12.08(d)).

Chapter 6.25

HUNTING

Sections:

6.25.010 Hunting.

6.25.010 Hunting. A. No person shall hunt any fur-bearing animal or bird within the city limits except as otherwise expressly permitted by state law or by the City of Eau Claire Code of Ordinances.

B. This section shall not apply to bow hunting of deer when it has been determined by the director of community services that such hunting is necessary for proper game management or to protect parks or other property. Additionally, a permit for such hunting must be issued by the chief of police, or the chief of police's designee, stating that the activity would not pose a threat to health and

safety in the area where such hunting shall take place. (Ord. 7202, 2016; Ord. 7152 §1, 2015; Ord. 5222, 1992).

Title 8

HEALTH AND SAFETY

Chapters:

8.04 Contagious Disease
8.05 Smoking Prohibited
8.06 Adult-Oriented Establishments
8.07 Nude Dancing in Licensed Establishments
8.16 Food Service Establishments
8.18 Hotel & Motel Registration
8.20 Trees
8.28 Weeds, Yards, and Lawns
8.32 Management of Waste and Recyclables
8.36 Inoperative Motor Vehicles
8.40 Miscellaneous Sanitary Regulations
8.44 Underground Utilities Required

Chapter 8.04

CONTAGIOUS DISEASE

Sections:

8.04.010 Report of cases--Statutes adopted.
8.04.020 Quarantine--Statutes adopted.
8.04.030 Handling foods--Statutes adopted.

8.04.010 Report of cases--Statutes adopted. All the provisions and amendments thereto of Chapters 252 and 254 of the Wisconsin Statutes and Chapter HFS 145 of the Wisconsin Administrative Code are adopted and by reference made a part of this chapter. (Ord. 6865 §1, 2008; prior code §4.27).

8.04.020 Quarantine--Statutes adopted. All the provisions and amendments thereto of Chapter 252 of the Wisconsin Statutes are adopted and by reference made a part of this chapter. (Ord. 6865 §2, 2008; prior code §4.28).

8.04.030 Handling foods--Statutes adopted. All the provisions and amendments thereto of Section 252.18 of the Wisconsin Statutes are adopted and by reference made a part of this chapter. (Ord. 6865 §3, 2008; prior code §4.29).

Chapter 8.05

SMOKING PROHIBITED

Sections:

8.05.010 Purpose.

8.05.020 Definitions.
8.05.030 Smoking prohibited in public places.
8.05.040 Smoking prohibited in places of employment.
8.05.050 Smoking prohibited in specified outdoor areas.
8.05.060 Exceptions.
8.05.070 Signs required.
8.05.080 Enforcement.
8.05.090 Additional private prohibitions.
8.05.100 Other applicable laws or regulations.
8.05.110 Liberal construction.
8.05.120 Penalty.
8.05.130 Severability.

8.05.010 Purpose. It is recognized that smoking of tobacco-related products is hazardous to the health of both smokers and nonsmokers who are exposed to smoking. Reliable scientific studies, including studies conducted by the Surgeon General of the United States, have shown that breathing sidestream or secondhand smoke is a significant health hazard to nonsmokers, particularly to children, elderly people, individuals with cardiovascular disease, and individuals with impaired respiratory function, including asthmatics and those with obstructive airway disease. Health hazards induced by breathing sidestream or secondhand smoke include lung cancer, respiratory infection, decreased respiratory function, decreased exercise tolerance, bronchoconstriction, and bronchospasm. This ordinance is adopted for the purpose of protecting the public health, safety, comfort, and general welfare of the people of the city of Eau Claire, especially recognizing the health interests of nonsmokers, who constitute a majority of the population. (Ord. 6819, 2008).

8.05.020 Definitions. For purposes of this chapter, the following terms have the meaning indicated:

A. "Adult day care facility" has the meaning set forth in sec. 49.45(47)(a), Wis. Stats.

B. "Bed and breakfast establishment" has the meaning set forth in sec. 254.61(1), Wis. Stats.

C. "Child care facility" shall mean any licensed or certified child care facility, including, but not limited to licensed family day care or licensed group day care centers, licensed day camps, certified school-age programs, and Head Start programs.

D. "Cigarette" has the meaning set forth in sec. 139.30(1), Wis. Stats.

E. "Enclosed area" shall mean all space between a floor and ceiling that is enclosed on all sides by solid walls or windows (exclusive of doorways) which extend from the floor to the ceiling.

F. "Entrance" shall mean a doorway and adjacent area which gives direct access to a building from a contiguous street, plaza, sidewalk, or parking lot.

G. "Health care facility" has the meaning set forth in sec. 155.01(6), Wis. Stats .

H. "Hotel and motel" have the meaning set forth in sec. 254.61(3), Wis. Stats.

I. "Mall" shall mean an enclosed indoor area containing common areas and discrete businesses and stores primarily devoted to the retail sale of goods and services.

J. "Medical services" has the meaning set forth in sec. 647.01(6), Wis. Stats.

K. "Non-smoking" shall mean smoking is prohibited.

L. "Place of employment" shall mean an enclosed area controlled by the employer which employees normally frequent during the course of employment, including, but not limited to common work areas, private offices, employee lounges, restrooms, conference and meeting rooms, classrooms, health care facilities, cafeterias, stairways, hallways, vehicles, and all other enclosed facilities. A private residence is not a "place of employment" within the meaning of this ordinance.

M. "Private club" shall mean an organization, whether incorporated or not, which is the owner, lessee, or occupant of a building or portion thereof used exclusively for club purposes at all times, which is operated solely for a recreational, fraternal, social, patriotic, political, benevolent, or athletic purpose, but not for pecuniary gain and which only sells alcohol beverages incidental to

its operation. The affairs and management of the private club are conducted by a board of directors, executive committee, or similar body chosen by the members at an annual meeting. The private club has established bylaws and/or a constitution to govern the club's activities. The private club has been granted an exemption from the payment of federal income tax as a club under 26 U.S.C.A. section 501.

N. "Private residence" shall mean a premise owned, rented, or leased for temporary or permanent habitation.

O. "Public place" shall mean any enclosed area to which the public is invited or in which the public is permitted. A private residence is not a public place unless it is used as a child care facility, adult day care facility, or health care facility.

P. "Smoking" shall mean to inhale, exhale, carry, possess, or control any lighted or heated cigarette or any lighted or heated tobacco product in any form or in any manner. Smoking shall also include the use of an electronic smoking device, in any manner or in any form.

Q. "Tobacco product" has the meaning set forth in sec. 139.75(12), Wis. Stats.

R. "Electronic smoking device" shall mean any product containing or delivering nicotine or any other substance that may be used by a person to simulate smoking through inhalation of vapor or aerosol from the product. Electronic smoking device shall also include any device manufactured, distributed, marketed, used or sold as an e-cigarette, e-cigar, e-pipe, e-hookah, or vape pen, or under any other product name or description, or any component part of such product whether or not sold separately, and whether or not containing or delivering any nicotine. (Ord. 7386, §1, 2020; Ord. 6819, 2008).

8.05.030 Smoking prohibited in public places. Except as provided in s. 8.05.060, smoking in any public place shall be unlawful, including, but not limited to the following:

A. Theatres, libraries, museums, auditoriums, and convention halls which are used by or open to the public.

B. Child care facilities.

C. Adult day care facilities.

D. Retail stores.

E. Health care facilities.

F. Waiting rooms, hallways, or rooms of health care laboratories.

G. Waiting rooms, hallways, and rooms in offices of any physician, dentist, psychologist, chiropractor, optometrist, optician, or other medical service provider.

H. Lobbies, hallways, and other common areas in apartment buildings, condominiums, trailer parks, retirement facilities, and other multiple-unit residential facilities.

I. Restrooms, lobbies, reception areas, hallways, and other common areas which are used by or open to the public.

J. Meeting and conference rooms in which people gather for educational, business, professional, union, governmental, recreational, political, or social purposes.

K. Polling places.

L. Self-service laundry facilities.

M. Restaurants.

N. Bars, taverns, nightclubs, and cocktail lounges.

O. Common areas of malls, meaning those areas within a mall customarily accessible to patrons.

P. City facilities, meaning all city-owned and operated buildings and those portions of buildings leased and operated by the city.

Q. City transit buses and public bus shelters of the city, whether or not such bus shelter is an enclosed area.

R. Educational facilities, meaning any building used principally for educational purposes in which a school is located or a course of instruction or training program is offered that has been approved or licensed by a state agency or board.

S. Sports arenas, meaning sports pavilions, stadiums, gymnasiums, health spas, swimming pools, roller and indoor ice rinks, bowling centers, and other similar places where the public assembles to engage in physical exercise, participate in athletic event competition, or witness a sporting or other event.

T. Common areas in bed and breakfast establishments, hotels and motels, and rooms thereof that are rented to guests and designated as non-smoking rooms including lobbies, community rooms, hallways, laundry rooms, stairwells, elevators, enclosed parking facilities, pool areas, and restrooms within said facilities. (Ord. 6819, 2008).

8.05.040 Smoking prohibited in places of employment. A. Except as provided in s. 8.05.060, smoking in any place of employment shall be unlawful.

B. This prohibition on smoking shall be communicated to all existing employees prior to the effective date of this ordinance and to all prospective employees upon their application for employment. (Ord. 6819, 2008).

8.05.050 Smoking prohibited in specified outdoor areas . Smoking shall be unlawful in the following areas:

A. Within a reasonable distance of all outside entrances to, operable windows of, or ventilation systems of public places or places of employment where smoking is prohibited pursuant to ss. 8.05.030 and 8.05.040 so as to prevent smoke from entering said enclosed areas in which smoking is prohibited.

B. In the seating areas of all outdoor arenas, stadiums, and amphitheaters, as well as in the bleachers and grandstands used by spectators at sporting and other public events, including, without limitation, Carson Park football and baseball stadiums.

C. Those portions of city parks temporarily posted as no smoking areas by the department of community services at the request of a park permit holder or park facility lessee or when necessary for the public health or safety.

D. Those areas outside of city facilities that are posted as no smoking by the city manager or his or her designee. (Ord. 7202, 2016; Ord. 6819, 2008).

8.05.060 Exceptions. The following shall not be subject to and are exempt from the smoking prohibitions of this chapter:

A. Use of tobacco by an enrolled member of an Indian tribe, as those terms are defined in sec. 139.30(4) and (5), Wis. Stats., as part of a traditional spiritual or cultural ceremony.

B. Bed and breakfast establishments and hotel and motel rooms that are rented to guests and are designated as smoking rooms, provided that not more than twenty-five percent (25%) of the rooms rented to guests are designated as smoking rooms. This exception does not include common areas as defined in s. 8.05.030 T.

C. Private residences, except when used as a child care facility, adult day care facility, or health care facility.

D. Private clubs, except when used for a function to which the public is invited or permitted to enter. This exception shall not apply to any organization established to avoid compliance with the ordinance. (Ord. 6819, 2008).

8.05.070 Signs required. A. Signs prohibiting smoking shall be posted conspicuously at every entrance by the proprietor or other person in charge of each building or structure regulated by ss. 8.05.030 and 8.05.040. Signs in specified outdoor areas designated as non-smoking pursuant to s. 8.05.050 shall be placed so that the general public has reasonable notice of the prohibition. Signs shall contain a reference that regulation is by ordinance, such as “No Smoking - City Ordinance Chapter 8.05”, or equivalent. A sign, provided by or approved by the health department, shall not be smaller than 8 1/2" x 5 1/2", except that signs in specified outdoor areas may be reduced in size and displayed on table top tents or menus.

B. It shall be unlawful for any person to remove, deface, or destroy any legally required “No Smoking” sign. (Ord. 6819, 2008).

8.05.080 Enforcement. A. The proprietor or other person in charge of premises regulated hereunder shall make reasonable efforts to prevent smoking in prohibited areas by:

1. Approaching persons who fail to voluntarily comply with this chapter and requesting that they extinguish their smoking material and refrain from smoking upon witnessing the same or upon request from any person.

2. Any other means which may be deemed appropriate by said proprietor, including refusal of service to anyone smoking in a prohibited area.

B. No proprietor or other person in charge of premises regulated by this chapter shall place, provide, or make available any ashtray or similar device used to facilitate smoking in an area where smoking is prohibited.

C. Any person who is smoking shall be refused admittance to a city transit bus.

D. Any person smoking on a city transit bus shall be required to leave such bus as ordered by the person in charge of the bus at the time or his agent, without reimbursement for any fee or charge which may have been paid for admittance to said bus.

E. Any person who desires to register a complaint under this chapter may contact the city-county health department.

F. No person shall discharge, refuse to hire, refuse to serve, or in any other manner retaliate against any employee, applicant for employment, customer, service user, business patron, or any other person because that person exercises any rights afforded by this chapter.

G. The city-county health department, building inspections division, fire department, police department, or parks & recreation department shall have the power, whenever it may deem necessary, to enter a building, structure, or property regulated under this chapter to ascertain whether the premises are in compliance with this chapter. The above-listed departments may issue compliance orders and citations pursuant to the provisions of this code. (Ord. 6819, 2008).

8.05.090 Additional private prohibitions. Nothing in this ordinance shall prevent a proprietor or other person in charge of any place from prohibiting smoking in any indoor or outdoor area under their control. (Ord. 6819, 2008).

8.05.100 Other applicable laws or regulations. This chapter shall not be interpreted or construed to permit smoking where it is otherwise restricted by any other law or regulation. (Ord. 6819, 2008).

8.05.110 Liberal construction. This ordinance shall be liberally construed to achieve the purposes set forth in this chapter. (Ord. 6819, 2008).

8.05.120 Penalty. Any person who violates any provision of this chapter shall be required to forfeit not less than $50 nor more than $500. Each day of violation shall constitute a separate offense. (Ord. 6819, 2008).

8.05.130 Severability. The provisions of this chapter are severable. If any provision of this chapter is held to be invalid or unconstitutional, or if the application of any provision of this chapter to any person or circumstance is held to be invalid or unconstitutional, such holding shall not affect the other provisions or applications of this chapter which can be given effect without the invalid or unconstitutional provisions or applications. It is hereby declared to be the intent of the city council that this chapter would have been adopted had any invalid or unconstitutional provisions or applications not been included herein. (Ord. 6819, 2008).

Chapter 8.06

ADULT-ORIENTED ESTABLISHMENTS

Sections:

8.06.010 Purpose and intent.
8.06.020 Definitions.
8.06.030 Regulation of adult-oriented establishments.
8.06.040 Application of chapter.
8.06.050 Penalty.

8.06.010 Purpose and intent. The City Council finds that several adult-oriented establishments exist within the City of Eau Claire and that their nature, design and intended use is conducive to high-risk sexual behavior. Such high-risk sexual behavior has the potential of exposing persons to, among other things, the Human Immunodeficiency Virus (HIV) and Acquired Immune Deficiency Syndrome (AIDS). AIDS is currently determined to be irreversible and uniformly fatal. This chapter is created to provide minimum standards for such adult-oriented establishments in order to protect the general health, safety and welfare of the citizenry, by regulating those features of adult-oriented establishments which tend to facilitate and promote high-risk sexual behavior and by providing regulations which aid in the surveillance and detection of unlawful activities within such premises. (Ord. 5247 §2, 1992).

8.06.020 Definitions. In this chapter the following words and phrases shall have the meaning as indicated, unless the context expressly requires otherwise:

A. "Adult-oriented establishment" means, but is not limited to, adult bookstores, adult motion picture theaters and any other premises to which public patrons or members are invited or admitted and which are so physically arranged so as to provide booths, cubicles, rooms, compartments or stalls separate from the common areas of the premises for the purposes of viewing adult-oriented videotapes, films, motion pictures, or other offered adult entertainment, whether or not such adult entertainment is held, conducted, operated or maintained for a profit, direct or indirect.

B. "Adult bookstore" means an establishment having as its stock in trade, for sale, rent, lease, inspection or viewing books, films, video cassettes, motion pictures, magazines or other periodicals which are distinguished or characterized by their emphasis on matters depicting, describing or relating to specific sexual activities or specified anatomical areas, and in conjunction therewith have facilities for the presentation of adult entertainment, including adult-oriented videotapes, films, motion pictures or other offered entertainment, for observation by patrons therein.

C. "Adult motion picture theater" means an enclosed building used for presenting materials having as its dominant theme, or distinguished or characterized by an emphasis on, matters depicting, describing or relating to specified sexual activities or specified anatomical areas, for observation by patrons therein.

D. "Adult entertainment" means any exhibition of any videotape, film or motion picture of any type, which has as its dominant theme, or is distinguished or characterized by an emphasis on, any actual or simulated specified sexual activities or specified anatomical areas.

E. "Door, curtain or portal partition" means a nontransparent closure device which prevents activity taking place within a booth, room or cubicle from being seen or viewed.

F. "Operator" means any person operating, conducting, maintaining or owning any adult-oriented establishment.

G. "Specified sexual activities" means simulated or actual:

1. Showing of human genitals in a state of sexual stimulation or arousal;

2. Acts of masturbation, sexual intercourse, sodomy, bestiality, necrophilia, sado-masochistic abuse, fellatio or cunnilingus;

3. Fondling or erotic touching of human genitals, pubic region, buttock or female breasts.

H. "Specified anatomical areas" means:

1. Less than completely and opaquely covered human genitals, pubic region, buttocks and female breast below a point immediately above the top of the areola;

2. Human male genitals in a discernible turgid state, even if opaquely covered. (Ord. 5247 §2, 1992).

8.06.030 Regulation of adult-oriented establishments. A. Any adult-oriented establishment having available for customers, patrons or members any booth, room, or cubicle for the private viewing of any adult entertainment shall comply with all of the following requirements:

1. Each such booth, room or cubicle shall be totally accessible to and from aisles and public areas of the adult-oriented establishment, and shall be unobstructed, in total or in part, by any door, curtain or portal partition.

2. Each such booth, room or cubicle shall:

a. Be separated from all adjacent booths, rooms and cubicles and any non-public areas by a partition. All partitions shall be solid and without any openings, and shall extend from the floor to a height of not less than 6 feet. All partitions shall be light colored, non-absorbent, smooth textured and easily cleanable.

b. Have at least one side totally open to a public lighted aisle so that there is an unobstructed view at all times of anyone occupying such booth, room or cubicle.

c. Have a floor which is light colored, non-absorbent, smooth textured and easily cleanable.

d. Be lighted in such a manner that a person in the booth, room or cubicle is reasonably visible from the adjacent public rooms or areas, but such lighting shall not be of such intensity as to prevent the viewing of videotapes, motion pictures or other offered entertainment.

3. No more than one person shall occupy any such booth, room or cubicle at any time. No occupant of any such booth, room or cubicle shall engage in any sexual activity, or cause any bodily discharge, or litter while in the booth, room or cubicle. No person shall alter, damage or deface any portion of any such booth, room or cubicle in such a manner that it no longer complies with the provisions of this chapter.

4. The premises of the adult-oriented establishment shall be maintained in a clean and sanitary manner at all times. (Ord. 5247 §2, 1992).

8.06.040 Application of chapter. The standards established in this chapter shall not apply to buildings, structures or premises which are lawfully operating as hotels, motels, apartment complexes or condominiums. (Ord. 5247 §2, 1992).

8.06.050 Penalty. A. Every act or omission by an employee constituting a violation of the provisions of this chapter shall be deemed the act or omission of the operator if such act or omission occurs either with the authorization, knowledge, or approval of the operator or as a result of the operator's negligent failure to supervise the employee's conduct. In such event, the operator shall be punishable under subsection B. for such act or omission in the same manner as if the operator committed the act or caused the omission.

B. Any person who violates, or knowingly allows or permits any violation of, any provision of this chapter, or any person who operates or permits the operation of any adult-oriented establishment in violation of this chapter, shall forfeit an amount not exceeding $1,000 for each offense. Each day, or portion thereof, that a violation of this chapter exists or continues to exist shall constitute a separate offense. (Ord. 5247 §2, 1992).

Chapter 8.07

NUDE DANCING IN LICENSED ESTABLISHMENTS

Sections:

8.07.010 Authority and purpose.
8.07.020 Definitions.
8.07.030 Nude dancing in licensed establishments prohibited.
8.07.040 Exemptions.
8.07.050 Penalties.
8.07.060 Severability.

8.07.010 Authority and purpose. The city council of the city of Eau Claire has explicit authority under s. 125.10(1), Wis. Stats., to adopt regulations governing the sale of alcohol beverages which are in addition to those set forth in ch. 125, Wis. Stats., and has authority under its general police powers set forth in s. 62.11(5), Wis. Stats., to act for the good order of the municipality and for the health, safety and welfare of the public and may carry out its powers by regulation and suppression.

The city council recognizes it lacks authority to regulate obscenity in light of s. 66.0107(3), Wis. Stats., and does not intend by adopting this ordinance to regulate obscenity, since nudity in and of itself is not obscene, and declares its intent to enact an ordinance addressing the secondary effects of live, totally nude, non-obscene, erotic dancing in bars and taverns.

The city council finds that bars and taverns featuring live, totally nude, non-obscene, erotic dancing have in other communities tended to further the increase of criminal and other offensive activity, to disrupt the peace and order of the communities, to depreciate the value of real property, to harm the economic welfare of the communities, and to negatively affect the quality of life of the communities, and such secondary effects are detrimental to the public health, safety and general welfare of citizens.

The city council recognizes that the U.S. supreme court has held that nude dancing is expressive conduct within the outer perimeters of the first amendment to the United States constitution and therefore entitled to some limited protection under the first amendment, and the city council further recognizes that freedom of speech is among our most precious and highly protected rights, and wishes to act consistently with full protection of those rights. The city council is aware, based on the experiences of other communities, that bars and taverns in which live, totally nude, non-obscene, erotic dancing occurs may and do generate secondary effects which the city council believes are detrimental to the public health, safety and welfare of the citizens of the city of Eau Claire, namely the potential increase in prostitution and other sex-related offenses, as well as other crimes and offenses; the potential depreciation of property values in neighborhoods where bars and taverns featuring nude dancing exist; health risks associated with the spread of sexually transmitted diseases; and the potential for infiltration by organized crime for the purpose of unlawful conduct.

The city council thus desires to minimize, prevent and control these adverse effects and thereby protect the health, safety and general welfare of the citizens of the city of Eau Claire; protect the citizens from increased crime; preserve the quality of life; preserve the property values and character of surrounding neighborhoods; and deter the spread of urban blight.

Therefore, the city council has determined that enactment of this chapter prohibiting live, totally nude, non-obscene, erotic dancing in bars and taverns licensed to serve alcohol beverages promotes the goal of minimizing, preventing and controlling the negative, secondary effects associated with such activity. (Ord. 5953, 1999).

8.07.020 Definitions. For purposes of this ordinance, the term “licensed establishment” means any establishment licensed by the city council of the city of Eau Claire to sell alcohol beverages pursuant to ch. 125, Wis. Stats. The term “licensee” means the holder of a retail “Class A”, “Class B”, Class “B”, Class “A”, or “Class C” license granted by the city council of the city of Eau Claire pursuant to ch. 125, Wis. Stats. (Ord. 5953, 1999).

8.07.030 Nude dancing in licensed establishments prohibited. It is unlawful for any person to perform or engage in, or for any licensee, manager or agent of the licensee to permit any person, employee, entertainer or patron to perform or engage in any live act, demonstration, dance or exhibition on the premises of a licensed establishment which:

A. Shows his or her genitals, pubic area, vulva, anus, anal cleft or cleavage with less than a fully opaque covering; or

B. Shows any portion of the female breast below a point immediately above the top of the areola; or

C. Shows the covered male genitals in a discernibly turgid state. (Ord. 5953, 1999).

8.07.040 Exemptions. The provisions of this ordinance do not apply to the following licensed establishments: theaters, performing arts centers, civic centers, and dinner theaters where live dance, ballet, music and dramatic performances of serious artistic merit are offered on a regular basis and in which the predominant business or attraction is not the offering to customers of entertainment which is intended to provide sexual stimulation or sexual gratification to such customers and where the establishment is not distinguished by an emphasis on, or the advertising or promotion of, employees engaging in nude erotic dancing. (Ord. 5953, 1999).

8.07.050 Penalties. Any person, partnership, or corporation who violates any of the provisions of this ordinance shall be subject to a forfeiture of not less than $25 and not more than $1,000 per violation. A separate offense and violation shall be deemed committed on each day on which a violation occurs or continues. In addition, violation of this ordinance constitutes sufficient grounds for suspending, revoking or non-renewing an alcohol beverage license under s. 125.12, Wis. Stats. (Ord. 5953, 1999).

8.07.060 Severability. If any section of this ordinance is found to be unconstitutional or otherwise invalid, the validity of the remaining sections shall not be affected. (Ord. 5953, 1999).

Chapter 8.08

CONVERSION THERAPY PROHIBITED

Sections:

8.08.010 Purpose.
8.08.020 Definitions.
8.08.030 Conversion Therapy Prohibited.
8.08.040 Penalty.

8.08.010 Purpose. A. This ordinance is adopted to protect the health, safety and welfare of the people of the City of Eau Claire, especially the physical and psychological well-being of minors, including lesbian, gay, bisexual and transgender youth, and to protect them against the exposure to serious harms caused by conversion therapy.

B. It is the well documented, prevailing opinion of the medical and psychological community that conversion therapy has not been shown to be effective and that it creates a potential risk of serious harm to those who experience it.

C. The prevailing opinion of the medical and psychological community is documented in position statements, articles and reports published by the following organizations: the American Psychological Association, the American Psychiatric Association, the American School Counselor Association, the American Academy of Pediatrics, the American Medical Association, the National Association of Social Workers, the American Counseling Association, the American Psychoanalytic Association, the American Academy of Child and Adolescent Psychiatry and the Pan American Health organization.

D. In particular, the Task Force on Appropriate Therapeutic Responses to Sexual Orientation of the American Psychological Association conducted a systematic review of peer reviewed journal literature on sexual orientation change efforts, and issued a report in 2009. The report concluded that conversion therapy has not been demonstrated to be effective and that there have been anecdotal reports of harm, including depression, suicidal thoughts or actions, and substance abuse.

E. In addition other organizations concluded that homosexuality and bisexuality are not illnesses and do not require treatment (American School Counselor Association), being transgender is not a mental disorder, conversion therapy can promote guilt and anxiety (American Academy of Pediatrics), and it may contribute to an enduring sense of stigma and self-criticism (American Psychoanalytic Association).

8.08.020 Definitions. In this section:

A. "Conversion therapy" means any practices or treatments offered or rendered to consumers for a fee, including psychological counseling, that seeks to change a person's sexual orientation or gender identity, including efforts to change behaviors or gender expressions or to eliminate or reduce sexual or romantic attractions or feelings toward individuals of the same gender. Conversion therapy does not include counseling that provides assistance to a person undergoing gender transition, or counseling that provides acceptance, support, and understanding of a person or facilitates a person's coping, social support, and

identity exploration and development, including sexual-orientation-neutral interventions to prevent or address unlawful conduct or unsafe sexual practices, as long as such counseling does not seek to change an individual's sexual orientation or gender identity.

B. "Person" means any natural person, individual, corporation, unincorporated association, proprietorship, firm, partnership, joint venture, joint stock association, or other entity or business organization.

8.08.030 Conversion Therapy Prohibited. It is unlawful for any person to practice conversion therapy with anyone under 18 years of age.

8.08.040 Penalty. Any person convicted of violating this section shall be subject to a forfeiture of not less than $500 nor more than $1,000 for each violation. For purposes of this section, each day a person is found to have practiced conversion therapy shall be considered a separate violation.
(Ord. 7298, 2018).

Chapter 8.16

FOOD SERVICE ESTABLISHMENTS

Sections:

8.16.010 State statutes and administrative code adopted.
8.16.020 Definitions.
8.16.030 Licenses--Required.
8.16.040 Licenses--Application.
8.16.050 Health Department license--Fee.
8.16.060 City license--Fee.
8.16.070 License --City suspension and revocation.
8.16.080 License --Health Department suspension and revocation.
8.16.090 License--Display on premises.
8.16.100 Food and drink examinations.
8.16.110 Inspection.
8.16.120 Sanitation requirements--Food service establishments.
8.16.130 Temporary food service establishments.
8.16.140 Food service establishment--Conformance.
8.16.150 Reinstatement of permit.
8.16.160 Enforcement.
8.16.170 Violation--Penalty.

8.16.010 State statutes and administrative code adopted. The provisions, in accordance with sec. 97 and sec. 254, Wis. Stats., and Chapters ATCP 75 and DHS 196 of the Wisconsin Administrative Code, insofar as applicable, are incorporated by reference and made a part of this section with the same force and effect as those provisions set forth verbatim therein.

8.16.020 Definitions. In addition to the definitions found within ATCP 75 Appendix, Chapter 1, and DHS 196 Appendix, Chapter 1, of the Wisconsin Administrative Code, the following definitions shall apply in the interpretation and the enforcement of this chapter:

A. “DATCP” means the Wisconsin Department of Agriculture, Trade and Consumer Protection.

B. “DHS” means the Wisconsin Department of Health Services.

C. “Health Department” means the Eau Claire City-County Health Department.

D. “Board of Health” means the Board of Health as established under Chapter 2.52.030.

E. “City license” means a ‘limited food service’ license or a ‘non-limited food service’ license as issued by the City under the authority of this ordinance.

F. “Health Department license” means a license as issued by the City on behalf of the Health Department under the authority of the DATCP and DHS state agent contractual agreements with the Board of Health, the Wisconsin Administrative Code, and adopted Wisconsin state statutes. A Health Department license is a separate license and is not a city license.

G. "Health officer" means the director of Eau Claire City-County Health Department or that person’s authorized representative.

H. "Limited food service" means food service that is limited to individually wrapped, hermetically sealed single food servings supplied to a licensed processor.

I. "Non-limited food service" means food service which consists of meals served that are prepared from raw, canned, diced, and packaged or frozen foods.

8.16.030 Licenses--Required. A. It is unlawful for any person to operate a food service establishment without first obtaining a city license and a Health Department license for that purpose as herein provided. Licenses must be obtained by all persons operating or conducting a food service establishment or other eating place commercially and for profit. Such licenses need not be obtained by churches, clubs, lodges or other organizations that serve meals or refreshments less than four times in any one-year period nor shall such license be needed for any public or private school lunchroom. The licensee shall comply with the food manager certification requirements of DHS 196 Appendix, Chapter 12, of the Wisconsin Administrative Code.

B. It is unlawful for any person to operate a temporary food service establishment as defined in ATCP 75 Appendix, Chapter 1, of the Wisconsin Administrative Code without first obtaining a city license for that purpose. Application for a temporary food service establishment license shall be made to and issued by the Health Department. The Health Department may inspect or investigate each application and the premises, together as deemed necessary to determine whether the applicant and the premises sought to be licensed comply with the regulations, ordinances, and laws applicable thereto and whether the applicant is a proper recipient of a license. All regulations, ordinances, and laws applicable thereto must be met before a license is approved by the Health Department. Operators or licensees of temporary food service establishments whom the Health Department has found to be uncooperative or habitual violators of food service establishment regulations may be denied a license to operate.

C. Each license issued under this subchapter expires on June 30 of each year, except that a license initially issued during the period beginning on April 1 and ending on June 30 expires on June 30 of the following year. (Ord. 7283 §1, 2018)

8.16.040 Licenses--Application. Application for licenses shall be made in writing to the city clerk on forms to be provided by the city clerk, stating the name and address of the applicant, and the address and location of the proposed food service establishment, together with such other information as may be required. The clerk shall transmit such application to the Health Department, electrical inspector , building inspector, plumbing inspector and chief of the fire department and these officials shall inspect or cause to be inspected each application and the premises, together with such other investigation as shall be necessary to determine whether the applicant and the premises sought to be licensed comply with the regulations, ordinances, and law applicable thereto and whether the applicant is a proper recipient of a license. Such application shall require the recommendation of said officials and no license shall be issued without the same. All applications shall be presented to the city clerk who shall be responsible for issuing the license.

8.16.050 Health Department license--Fee. The Health Department license fee shall be as determined by the Board of Health.

8.16.060 City license--Fee. A. The city license fee shall be as stated in the City of Eau Claire Fees and Licenses Schedule.

B. The temporary food service establishment license fee shall be as stated in the City of Eau Claire Fees and Licenses Schedule.

8.16.070 License--City suspension and revocation. A city license may be temporarily suspended by the city for a violation of any provision of this chapter or revoked after repeated violations. Appeal from determinations of the board made under this section shall be made to the Administrative Review Board under the procedures specified in Chapter 1.06. Appeal shall stay the contested administrative determination pending decision by the Administrative Review Board.

8.16.080 License--Health Department suspension and revocation. A Health Department license may be temporarily suspended by the Health Department for a violation of this chapter or revoked after repeated violations. Appeal from determinations of the Health Department made under this section shall be made to the Board of Health. Appeal shall stay the contested determination pending decision by the Board of Health.

8.16.090 License--Display on premises. Every food service establishment or temporary food service establishment shall display at all times, in a conspicuous place, the licenses of the establishment.

8.16.100 Food and drink examinations. A. Samples of food, drink and other substances may be taken by the health officer as allowed by the Health Department's Food Establishment Regulation and the Health Department's Milk and Milk Product Regulation. Samples shall be analyzed for conformance with the Food Establishment Regulation and the Milk and Milk Product Regulation. Any samples taken shall conform to state statutes and the Wisconsin Administrative Code.

B. The health officer may upon written notice to the owner or person in charge, specifying with particularity the reasons therefore, place a hold order on any food which the health officer believes is in violation of this chapter. Hold orders shall be placed upon specified food items in accordance with state statutes and the Wisconsin Administrative Code. The hold order shall state that a request for hearing may be filed within ten (10) days and that if no hearing is requested, the food shall be destroyed. If a request for hearing is received, the hearing shall be held pursuant to the Board of Health appeal policy.

8.16.110 Inspection. A. Health inspections shall be conducted by the Health Department as required by the DATCP and DHS State Agent Contractual Agreements. Inspections may be conducted more frequently as necessary to ensure continued compliance with all rules and regulations. Reinspections shall be conducted as frequently as necessary to ensure compliance.

B. The person operating the food service establishment shall upon request of the health officer permit access to all parts of the establishment and shall permit copying any or all of the records of food purchased.

8.16.120 Sanitation requirements--Food service establishments. All food service establishments shall comply with all sanitation items of the Wisconsin Administrative Code and state statutes.

8.16.130 Temporary food service establishments. All temporary food service establishments shall comply with the requirements of the Wisconsin Administrative Code and state statutes. Only food requiring limited preparation on the premises as approved by the health officer shall be prepared and served.

8.16.140 Food service establishment--Conformance. No food service establishment shall be operated within the city unless it conforms to the requirements of this chapter. In case extensive alterations or repairs are required to comply with this chapter, a reasonable time, not to exceed ninety days will be allowed for full compliance; provided, that when any food service establishment fails to qualify, the health officer is authorized to suspend the permit.

8.16.150 Reinstatement of permit. Any food service establishment or temporary food service establishment, the license of which has been suspended, may at any time make

application for the reinstatement thereof. Within one week after the receipt of a satisfactory application, accompanied by a statement signed by the applicant to the effect that the violated provision or provisions of this chapter have been conformed with, the health officer shall make a reinspection and thereafter as many additional reinspections as he may deem necessary to assure himself that the applicant is again complying with the requirements and, in case the findings indicate compliance, shall reinstate the license.

8.16.160 Enforcement. This chapter shall be enforced by the health officer in accordance with the interpretations contained in the DHS and DATCP State Agent Contractual Agreements, Food Establishment Regulation, Milk and Milk Product Regulation, and the Wisconsin Administrative Code and state statutes.

8.16.170 Violation--Penalty. Any person who violates any provision of this chapter shall forfeit not less than $60 dollars nor more than $500 hundred dollars, plus the costs of prosecution, including any expert testimony fees necessitated by enforcement of this section. Every day that any violation of this section continues shall be deemed a separate offense. (Ord. 6940, 2010; Ord. 4111 §33, 1980; Prior code §4.74).

Chapter 8.18

HOTEL & MOTEL GUEST REGISTRATION

Sections:

8.18.010 Purpose.
8.18.020 Definitions.
8.18.030 Regulations.
8.18.040 Responsibility of guests.
8.18.050 Refusal of accommodation.
8.18.060 Responsibility of owner.
8.18.070 Public nuisance.
8.18.080 Other methods not excluded.
8.18.090 Penalty.

8.18.010 Purpose. The City Council finds that it is important for the health, safety, and welfare of our community and visitors to our community to control disturbance, vice, and narcotics offenses by requiring transient guests of hotels and motels to furnish identification at the time of registration and for operators to have evidence of identification available for reasonable inspection by a peace officer. The city council further finds that furnishing identification at the time of registration does not impede hotel or motel business and is not overly invasive to guest privacy. (Ord. 6864 §1, 2008).

8.18.020 Definitions. A. "Hotel or motel" shall mean any structure, or any portion of any structure, which is occupied, intended, or designed for occupancy by transients for dwelling, lodging, or sleeping purposes for pay and is held out as such to the public. Hotel or motel does not mean any hospital, convalescent home, or sanitarium.

B. "Operator" shall mean the person who is the proprietor of the hotel or motel, whether in the capacity of owner, lessee, sublessee, mortgagee in possession, licensee, or any other capacity. Where the operator performs his functions through a managing agent of any type or character other than an employee, the managing agent shall also be deemed an operator for purposes of this chapter and shall have the same duties and liabilities as his principal. Compliance with the provisions of this chapter by either the principal or the managing agent shall, however, be considered to be compliance by both.

C. "Guest" shall mean any transient who exercises occupancy or is entitled to occupancy by reason of concession, permit, right of access, license, or other agreement. (Ord. 6864 §1, 2008).

8.18.030 Regulations. A. A guest shall furnish to an operator a satisfactory identification as part of the registration process for the hire of the lodgings by that guest. If requested, the guest shall furnish to the operator the names of any additional occupants.

B. Satisfactory identification for legal residents of the United States shall consist of one of the following: a valid driver's license issued by the guest's state; a federal or state government or military identification card; a passport; or any other form of valid governmental identification on which the guest's photograph appears. For persons legally residing outside of the United States, valid governmental identification shall include an official passport; United States visa; INS alien registration card; or INS border crossing card.

C. The operator of the hotel shall maintain a record of the identification produced by the guest. A record shall include the name and current address of the guest; ID number; state or country of issue; date of birth; the guest's vehicle description, including vehicle license plate number; the date and time the guest registered; the room number occupied by such guest; and the signature of the guest registering. The record shall be retained by the operator for one year.

D. Every peace officer shall have access to and the right to inspect guest records kept by any hotel or motel if in furtherance of a law enforcement investigation of a possible violation of any ordinance, regulation or law; to determine the identity and number of occupants in a time of civil emergency; of for other legitimate reasons of public safety and welfare.

E. No hotel or motel may operate as a bawdy house, disorderly house, drug house, gambling place, or criminal gang house, as those terms are defined in Wisconsin Statutes Chapter 823. (Ord. 6864 §1, 2008).

8.18.040 Responsibility of guest. A. No guest shall provide false or fraudulent registration information or identification to the operator of the hotel as required in s. 8.18.030 B. above.

B. No guest shall furnish to the operator of the hotel false information as to any additional occupants as required in s. 8.18.030 A. above. (Ord. 6864 §1, 2008).

8.18.050 Refusal of accommodation. The operator may refuse or deny the use of a room, accommodations, facilities, or other privileges of the hotel or motel to any of the following:

A. An individual who is unwilling or unable to pay for the use of a room, accommodations, facilities, or other privileges of the hotel or motel.

B. An individual who is unwilling or unable to provide satisfactory identification as required under s. 8.18.030 above.

C. An individual who is visibly intoxicated, under the influence of alcohol or other drug, and is disorderly so as to create a public nuisance.

D. An individual who the owner or operator or his agent reasonably believes is seeking to use a room, accommodations, facilities, or other privileges of the hotel or motel for an unlawful purpose.

E. An individual who the owner or operator or his agent reasonably believes is bringing in anything which may create an unreasonable danger or risk to other persons, including, but not limited to explosives or the unlawful use of firearms.

F. An individual whose use of the room, accommodations, facilities, or other privileges of the hotel or motel would result in a violation of the maximum capacity of such hotel. (Ord. 6864 §1, 2008).

8.18.060 Responsibility of operator. In the event the operator fails to comply with s. 8.18.030 above, the operator shall be held responsible for conduct or activity at the hotel or motel which is prohibited by sections 9.56.010, 9.56.070, or 9.56.075 of this code, or section 947.01, Wis. Stats. (Ord. 6864 §1, 2008).

8.18.070 Public nuisance. Violations of this chapter shall constitute a public nuisance under chapter 9.36 of this code or under Wisconsin Statutes Chapter 823. The city may maintain an action to recover damages or abate a public nuisance pursuant to chapter 9.36 of this code or Wisconsin Statutes Chapter 823. (Ord. 6864 §1, 2008).

8.18.080 Other methods not excluded. The provisions of this chapter are not exclusive

and may be used in combination with each other or with any other section of this code or state statute applicable to this subject matter. (Ord. 6864 §1, 2008).

8.18.090 Penalty. Any person or corporation violating the provisions of this chapter shall, upon conviction, be fined a sum of not less than five dollars or more than five hundred dollars per day for each day of violation, if applicable, with the costs of prosecutions. (Ord. 6864 §1, 2008).

Chapter 8.20

TREES

Sections:

8.20.010 Title.
8.20.020 Purpose and necessity.
8.20.030 Definitions.
8.20.040 City forester.
8.20.050 Permits.
8.20.060 Protection.
8.20.070 Public nuisance abatement.
8.20.090 Tree maintenance.
8.20.100 Trees and shrubs prohibited.
8.20.110 Violation.

8.20.010 Title. This chapter shall be known and may be cited as the municipal shade tree ordinance of the city. (Ord. 3773 §1(part), 1977).

8.20.020 Purpose and necessity. It is the intent of this chapter to assume control of the planting, maintenance, and removal of trees and shrubs growing on public places in the city and to define public nuisances and provide for their abatement in order to provide the following:

A. An urban environment which is in ecological harmony with the surrounding natural and agricultural environments;

B. An urban environment which brings the positive qualities of the natural environment into the city for the benefit of its residents;

C. Protection of city watercourses from excessive runoff and erosion;

D. Protection to the residents of the city from the adverse effects of air pollution, dust, noise, excessive heat and glare;

E. The conservation of energy by minimizing the impact of winter extremes;

F. Assurance that trees and shrubs planted in the public right-of-way or in the vision triangle, as defined herein, do not interfere with the orderly and safe passage of vehicular and pedestrian traffic;

G. Future compensation for the loss of trees and shrubs and their beneficial aspects to public improvements;

H. Assurance that this part of the natural environment, on which man is dependent, be maintained in such a way as to insure its quality for future generations of city residents. (Ord. 3773 §1(part), 1977).

8.20.030 Definitions. In this chapter, unless the context clearly requires otherwise, the following words and terms shall be defined as follows:

A. "City forester" means the qualified designated city official of the city assigned to carry out the enforcement of this chapter under the supervision of the director.

B. "Director" means the director of community services.

C. "Dutch elm disease" means a public nuisance more particularly defined as follows:

1. Any living or standing elm tree or part thereof infected with the dutch elm disease fungus, Ceratocystis ulmi (Buisman), or which harbors any elm bark beetle, Scolytus multistriatus (Eichh), or hylurgopinus rufipes (Marsh);

2. Any dead elm tree or part thereof, to include logs, branches, stumps, and/or firewood that is not:

a. Buried;

b. Consumed by burning;

c. Debarked; or

d. Completely enclosed with a 6 mil. polyethylene material from May 1 to October 1.

D. "Park" means all public parks, playgrounds, waterfront, buffer areas, beaches, and leisure-time areas having individual names.

E. "Planting strip" means the public place lying between the curb, or proposed curb, and the lot line.

F. "Public nuisance" means any tree or shrub which is specifically designated as a public nuisance in this chapter or part of which is on public or private property which by reason of its condition interferes with the use of any public place, is infected with an injurious plant disease, or is infested with an injurious insect or other pest, and is detrimental to the construction of public improvements, or endangers the life, health, safety or welfare of the public or its property.

G. "Public place" means that part of every street, highway, avenue, alley, between the lot line and curb and from property line to property line, and any other land owned or controlled by the city, including tree planting easements. (Ord. 7202, 2016; Ord. 4556 §1, 1985; Ord. 3773 §1(part), 1977).

8.20.040 City forester. A. Appointment and Qualifications. The city forester shall be appointed by the director with approval of the city manager.

B. Authority.

1. It shall be the duty of the city forester, under the supervision of the director, to enforce the provisions of this chapter. In his absence, his duties shall become the responsibility of a qualified alternate designated by the director.

2. The city forester shall have the jurisdiction, authority, control, and supervision over all trees and shrubs growing on public places, to include but not be limited to planting, removal, maintenance and protection.

3. The city forester, or his appointed representative, shall have the authority to enter upon private property, at reasonable times, to inspect trees or shrubs, or parts thereof, upon request of the property owner, upon complaint, or if he has reasonable cause to believe that a public nuisance may exist. He may take necessary samples for laboratory analysis to determine necessary or advisable tree care or removal measures to be taken at the property owner's expense, except that the cost of inspection shall be borne by the city.

4. The city forester shall have the authority to grant a permit or appropriate license under the provisions of this chapter and rules and work standards adopted hereunder. He shall supervise all work done under any permit or license issued under the provisions of this chapter and may void any permit and recommend revocation of any license if the provisions of this chapter are not complied with.

5. The city forester shall have the authority to cause a public nuisance to be abated in accordance with Section 8.20.070 of this chapter.

6. The city forester shall have the authority to formulate a master street tree plan as approved by the city council and, in connection therewith, shall do the following:

a. Make periodic inventories of trees growing on public places and maintain all records appropriate to such inventories;

b. Consider all existing and future utility and environmental factors when recommending a specific species for public places within the city;

c. With the approval of the city council, have the authority to amend and make additions to the master street tree plan at any time that circumstances make it advisable.

7. The city forester shall perform such other powers and duties as are provided by the laws, rules or regulations of the state of Wisconsin, particularly Section 27.09 of the Wisconsin Statutes.

8. The city forester shall have the authority to suspend any license for a period not to exceed five days for just cause. In addition, he may recommend to the city council that the license be suspended for a longer period of time or revoked.

9. The city forester shall make himself available to the private property owner during reasonable times to give "on site" advice concerning proper arboricultural methods and standards. In addition, he shall be available to inform and discuss these methods and standards with interest groups, the media, and educational institutions within the city.

10. The city forester may establish arboricultural specifications, with approval of the city council, setting standards for the care, maintenance and protection of trees and shrubs. (Ord. 3773 §1(part), 1977).

8.20.050 Permits. A. No person shall plant, apply pesticides, spray, prune, remove, cut above the ground, prune roots, alter or do surgery on any tree or shrub growing on a public place without first procuring a permit from the city forester.

B. Each permit shall specify an expiration date not to exceed a period of twelve months from date of issuance. The city forester shall be contacted when the work described on the permit is completed.

C. Each permit issued shall be on a standard form and shall contain a description of the work to be done, size, location, species and variety of tree involved, pesticides to be applied and dosages to be used.

D. The city forester shall issue the permit provided for in this section if, in his judgment, the proposed work is desirable and if the proposed method and workmanship thereof are of a satisfactory nature. In making this judgment, the forester shall consider the safety, health, and welfare of the public, location of public utilities, condition of public sidewalks and driveways and shall consider the nature of the soils, and the physiological species requirements.

E. Whenever a permit is required by a public utility or contractor, the city forester, with the approval of the director, may assign an inspector to supervise the work done under the provisions of this chapter.

F. Copies of the city's arboricultural specifications established under subsection B(10) of Section 8.20.040 shall be supplied with each permit. These specifications shall be amended by the city forester, with approval by the city council as research or new laws require.

G. If an abutting property owner requests a permit to perform tree work on a planting strip and intends to complete the work himself, he shall assume all responsibility for damage to the public's property and injury or death to the public that may be a result of this work. This liability shall be indicated on the permit.

H. For new development, the city forester or the city forester's designee may plant trees, shrubs or other plants within the boulevard as defined by section 8.28.102, or within the front yard as may be required, in accordance with the City Landscape Manual. The adjacent property owner shall be charged a fee that shall be as stated in City of Eau Claire Fees and Licenses Schedule. (Ord. 7213 §1 2016; Ord. 3773 §1(part), 1977).

8.20.060 Protection. Except as authorized by prior permission from the city forester, it shall be a violation of this chapter to perform or cause to be performed the following acts in any public place within the city;

A. To attach any sign, poster, handbill, electrical installation, wire, or other device or material to, around, or through a tree;

B. To permit or cause fire to burn where it may kill or injure any tree;

C. To allow any wire charged with electricity to come in contact with any tree, or to allow any toxic chemical, smoke, oil, gas, or other substance that may kill or damage any tree to come in contact with its leaves or roots;

D. To use tree spurs or climbers when working in healthy trees;

E. To remove any guard, stake, pole or other device intended for the protection or stabilization of a public tree or close or obstruct any open space around the base of a public tree designed to permit access to air, water, and fertilizer;

F. To erect, alter, repair, raze, or move any building, structure or other large object without placing suitable guards around public trees which may be injured by such operations. It shall be the

responsibility of the owner thereof to repair or replace any tree injured or killed by such operations. If it is found that movement of any tree is necessary to allow for such operations, the cost of this movement shall be borne by the owner of the object;

G. To excavate any ditch, tunnel, hole, trench, or place any drive within a radius of 1.525 meters (five feet) from any tree in a public place except by those persons under written permit from the city forester or when an emergency situation exists. The city forester may require the posting of an adequate surety bond or other sufficient security by any person proposing to make any such excavation to cover the cost of replacement of any tree destroyed as the direct result of the excavation, as reasonably determined by the city forester.

Any person doing work on a tree in a public place shall be subject to the supervision and direction of the city forester. (Ord. 3773 §1(part), 1977).

8.20.070 Public nuisance abatement. A. No person shall permit any public nuisance to remain on any property owned or controlled by him, including public places.

B. Whenever the city forester finds and declares any tree or shrub a public nuisance, he shall notify the property owner or his agent in writing that the nuisance must be abated and the procedure required for the abatement. In the case of a public nuisance located in a public place, the city forester may summarily abate the nuisance without following the procedure provided for herein.

C. Dutch elm and other diseases. Trees, standing dead trees, and fallen timber from such trees infected with Dutch elm disease or oak wilt, infested with emerald ash borer, or other disease or pest that threatens a significant portion of the urban forest are declared a public nuisance and all reasonable efforts shall be made to remove and properly dispose of said material, as determined by and subject to the lawful orders of the city forester.

D. Procedure. Other public nuisances.

1. Notice shall be given to the property owner or his or her agent for abatement within a period of twenty days. Immediate removal shall be permitted in the event of a bona fide emergency which threatens the public safety.

2. If abatement of the nuisance has not occurred following the initial notice, a second notice shall be sent through certified mail, return receipt requested, requiring abatement within ten days.

3. If the nuisance has not been abated within this thirty-day period, the city forester may cause the tree or timber to be removed, ensure its proper disposal, or take such other or additional actions to remedy the public nuisance. The costs of this removal or other abatement may be imposed against the property in accordance with s. 66.0627, Wis. Stats., and the normal and usual special charges procedure of the city.

E. Appeal. Except in the case of immediate emergency situations, any person receiving an order from the city forester may appeal from all or any part thereof to the administrative review board under the procedures specified in ch. 1.06. Appeal shall stay the contested administrative determination pending decision by the board. (Ord. 6943, 2010; Ord. 6572 §15, 2005; Ord. 4556 §2, 1985; Ord. 3773 §1(part), 1977).

8.20.090 Tree maintenance. A. Specifications. Any person who intends to trim, remove, plant, perform tree surgery or apply pesticides to any tree on a public place shall be aware of and comply with the arboricultural specifications for public distribution at no cost. He shall suggest amendments to these specifications at any time that experience, new research or laws indicate improved methods.

B. Planting Strip. In consideration that the planting strip is the property of the public and under the management of the city, the responsibility for the trees planting, removal, and maintenance is hereby allocated to the following:

1. It shall be the responsibility of the city to remove and trim trees on the planting strip for the following reasons:

a. Trees, or parts thereof, that are considered by the city forester or city traffic engineer to be a public nuisance;

b. Trees, or parts thereof, that are found to be in conflict with city initiated public improvements and the construction of the same.

2. It shall be the responsibility of the property owner abutting the planting strip to remove or trim trees or parts thereof that interfere with sidewalk or driveway replacement, repair or installation, or with the movement of large objects, structures, or buildings, or the construction of the same.

3. The abutting property owner is encouraged to plant, and shall water, fertilize, and apply pesticides to trees on the planting strip.

4. If the city council determines that a threat exists or may in the future exist, either manmade or natural, to the future of the urban forest within the city, it may direct the city forester to initiate programs to insure planting or replacements of trees as may be required.

5. The city may undertake pesticide applications if the city council determines that an environmental emergency exists. If determined that extensive application of pesticides is necessary by the city, at least a seven-day notice thereof shall be given to the public in the official city newspaper.

No person shall apply pesticides contrary to federal or state laws.

C. Oak maintenance. The city council finds that oak wilt disease is a tree disease that has become a serious threat to the urban forest of the city. Because of the threat of such disease to the population of oak trees within the city, the city council establishes the tree maintenance restrictions contained in this subsection. Between April 15 and July 31, no person shall:

1. Prune any oak tree unless the pruning is required due to one or more of the following: removal or alteration of the tree due to construction activities; to alleviate a serious hazard; or to repair a wound in the tree caused by a natural or accidental casualty.

2. Prune or wound any oak tree or allow the stump to remain following the removal of a living oak tree without immediately applying to the wound or tree stump a one-time treatment of tree paint that is designed to prevent the entry of the oak wilt pathogen into the tree or tree stump.

3. Store oak wilt infected firewood that has been debarked or dried without completely covering the wood with plastic at least 6 mils in thickness. Such covering shall be maintained and not removed between April 15 and July 31. (Ord. 6943, 2010; Ord. 5864, 1998; Ord. 3773 §1(part), 1973).

8.20.100 Trees and shrubs prohibited. A. No person shall plant, grow, or maintain any tree or shrub in any yard of a corner lot within twenty feet (6.096 meters) of the corner of such lot that is higher than three feet above the level of the actual or proposed curb directly opposite. This subsection shall not apply to any tree or shrub in existence on July 31, 1977.

B. The following species are declared to be public nuisances and are prohibited in any place in the city, both public or private:

1. Acer negundo -- Boxelder (planted after 1957);
2. Poplus deltoides -- Cottonwood (planted after 1957);

C. The following genera and species are declared to be public nuisances and are prohibited on the planting strip:

1. Pinus -- Pines;
2. Picea -- Spruces;
3. Taxus -- Yews (includes shrubs);
4. Juniperus -- Red cedar (includes shrubs);
5. Thuja -- White cedar (includes shrubs);
6. Abies -- Firs;
7. Tsuga -- Hemlock;
8. Pseudotsuga -- Douglas fir;
9. Salix -- Willows;
10. Morus -- Mulberry;
11. Acer saccharinum -- Silver maple;
12. Gleditsia -- Thorned species of honey locust;
13. Robinia pseudo acacia -- Black locust;
14. Elaegnus -- Olive;
15. Sorbus -- Mountain ash;
16. Juglans -- Walnut and butternut;

D. The city forester or the city forester's designee shall create, maintain, and update a list

of trees, shrubs and other similar plants appropriate for planting in city parks, public lands and private property subject to site plan or general development review, and boulevards or planting strips in the public right of way that shall be entitled the “City Forester’s Planting Guide”. That Guide, or relevant portions of it, shall be an appendix to the City Landscape Manual, which is used by Plan Commission in its review of site plans and other development proposals. The Guide shall be kept on file by the city forester and made available to those with relevant development projects or any others who may request a copy. (Ord. 7213 §1, 2016; Ord. 3773 §1(part), 1977).

8.20.110 Violation. Any person who, either personally or through an agent or employee, violates any of the provisions of this chapter, shall pay a forfeiture of not less than $50 and not more than $500 and, in default of payment thereof, be imprisoned in the county jail not to exceed 90 days. A separate offense shall be deemed to have been committed on every day on which a violation occurs or continues. (Ord. 4556, §4, 1985; Ord. 3773 §1(part), 1977).

Chapter 8.28

WEEDS, YARDS, AND LAWNS

Sections:

8.28.010 Weed commissioner--Created.
8.28.020 Weed commissioner--Appointed.
8.28.030 Objectionable weeds.
8.28.040 City action.
8.28.050 Destruction--Published notice.
8.28.060 Application--City-owned property.
8.28.070 Special notices.
8.28.080 Enforcement dates.
8.28.100 Yards and lawns.
8.28.102 Boulevard planting, care, and maintenance.
8.28.105 Waivers.
8.28.110 Violation and penalty.

8.28.010 Weed commissioner--Created. The office of weed commissioner for the city is established pursuant to s. 66.0407 of the Wisconsin Statutes. (Ord. 4869 §1, 1988; prior code §1.16 (part)).

8.28.020 Weed commissioner--Appointed. Such office shall be held by the superintendent of streets and that person's designee or designees. No additional compensation shall be paid to the commissioner. (Ord. 4869 §2, 1988; prior code §1.16(a)).

8.28.030 Objectionable weeds. Every owner or occupant of any premises in the city shall destroy any growth of weeds on such premises. The term objectionable weeds shall mean Canada or other thistles, leafy spurge, field bindweed (commonly called creeping Jenny), Ambrosia trifida (commonly called giant ragweed), Arubuoisia artemesifolia (commonly called common ragweed), burdock, Rhus radicans, sometimes called Radicans toxicodendron, Rhus toxicodendron, Toxicodendron radicans (commonly called poison ivy), Urtica dioica (commonly called stinging nettle), dandelions or any other noxious weed. This section shall also apply to the boulevard in front of or along any premises. (Ord. 4869 §3, 1988; Ord. 3596 (part), 1976; Prior code §1.16(B)).

8.28.040 City action. After ten days from the publishing of a notice given as stated in this chapter, the city may destroy any weeds not so destroyed and assess the expense therefor against such property as a special tax thereon. (Prior code §1.16(C)).

8.28.050 Destruction--Published notice. The city manager shall, annually, on or before May 15th, cause to be published in the official newspaper a notice, once each week for two successive weeks, to the effect that objectionable weeds are to be destroyed as provided in this chapter, and that if the same are not so destroyed, action will be taken pursuant to Section 8.28.040. (Ord. 4869 §4, 1988; prior code §1.16(D), (E)).

8.28.060 Application--City-owned property. It shall be the duty of the weed inspector to apply the provisions of this chapter to city-owned property. (Prior code §1.16(F)).

8.28.070 Special notices. Special or additional notice upon any property owner or occupant may at any time be served personally or by mail requiring the destruction of weeds in which case all of the provisions of this chapter shall likewise apply. (Prior code §1.16(G)).

8.28.080 Enforcement dates. The provisions of this chapter shall be enforced between April 1 and October 31. (Ord. 4869 §5, 1988).

8.28.100 Yards and lawns. A. In this section, "yard" means an open space at grade on the same lot as a building or structure located between the main building and the adjoining lot line and/or street line. The measurement of a yard shall be the minimum horizontal distance between the lot line and the building or structure.

B. Yards shall be provided with adequate lawn, groundcover or vegetation, hedges or bushes, equal to at least ten percent of the total lot area. All areas which are not covered by vegetation shall be treated to prevent dust or the blowing or scattering of dust particles into the air. All trees, bushes or vegetation which overhang a public entrance, street or sidewalk shall be properly trimmed to avoid obstruction of the view and movements of vehicles and pedestrians.

C. Every owner or occupant of any premises having a lawn shall cut and maintain such lawn at a height not exceeding seven inches on such premises as well as the boulevard in front of or along such premises.

1. After ten days from the publishing of a notice given as stated in this subsection C. , the city may cut the lawn on any premises or boulevard and assess the expenses therefor against such property as a special tax thereon.

2. The city manager shall, annually, on or before May 15th, cause to be published in the official newspaper a notice, once each week for two successive weeks, to the effect that lawns are required to be cut and maintained as provided in this section, and that if such lawns are not cut and maintained, action will be taken pursuant to this section. At no time thereafter shall lawns exceed seven inches in height.

3. Special or additional notice upon any property or occupant may be made and served personally or by mail prior to any action taken by the city to cut the lawn on any premises or boulevard which is not in compliance with the provisions of this section.

4. This subsection shall be enforced by both the city-county health department and the weed commissioner of the city.

5. Determinations as to an owner or occupant's compliance with this subsection C. may be appealed to the administrative review board under the procedures specified in ch. 1.06. (Ord. 7275, 2018; Ord 4869 §6, 1988; Ord. 3654 §2, 1976).

8.28.102 Boulevard planting, care, and maintenance. A. In this section, "boulevard" means the public right-of-way area between the back of the curb or roadway edge and the sidewalk, or in the absence of a sidewalk, the area between the back of the curb or roadway edge and the property line.

B. It is the purpose and intent of the city of Eau Claire to allow property owners to plant and maintain the boulevard areas adjoining their property in a manner that enhances and improves the aesthetic appearance of city streets, avenues, and alleys as an aid to maintaining the sustainability, quality, and livability of the residential neighborhoods.

C. All boulevard areas shall be constructed as a grassy area after completion of concrete curb and gutter and maintained by the property owner in such condition thereafter. Such

boulevard shall be maintained in accordance with section 8.28.100, so as not to be unsightly or unsafe.

D. Every boulevard shall be grass except for walkways and driveways, provided that alternative ground cover and landscaping may be constructed and maintained by the adjoining property owner, subject to the restrictions set forth below.

1. Plantings, including flowers, may not exceed thirty-six (36) inches in height. Plantings within thirty (30) feet of any intersection as measured from the property line or within five (5) feet of any alley or driveway approach as measured from the end of the radius may not exceed eighteen (18) inches in height.

2. The planting and growing of vegetables within the boulevard is not permitted.

3. The utilization of native grasses, plants, and forbs is permitted in accordance with the requirements of section 8.28.105.

4. Noxious and objectionable weeds as described in section 8.28.030 are not permitted.

5. Plantings must be maintained in such a way that there is no overhang or encroachment onto the sidewalk, curb, or street area.

6. The property owner shall contact "Diggers Hotline" for utility location not less than seventy-two (72) hours before digging. No planting may occur unless the city has written confirmation of said contact. The property owner shall plan plantings so as not to interfere with the utilities.

E. The use of landscaping stone, bark, rock, plastic, or other non-vegetative ground cover may not exceed 50% of the abutting property owner's boulevard area. Non-vegetative ground cover shall be of a type that will not erode, wash, or drain off of the boulevard area.

F. Lawn ornaments, figurines, fountains, and statuary are not permitted within the boulevard.

G. Trees in a location and of a species approved by the city forester in compliance with chapter 8.20 are permitted within the boulevard.

H. A boulevard or carriage walk may be constructed of concrete, brick or other suitable material within the boulevard area. The boulevard walk may not exceed six (6) feet in width nor be constructed of blacktop, asphalt, or similar material.

I. No person shall pave over or cover any boulevard with asphalt, blacktop, concrete, or similar material, except for a boulevard walk, unless an exception is granted by the city council upon a finding of demonstrated need or hardship, and that the paving or covering will not have a substantially negative impact on the aesthetic appearance of adjacent residential properties.

J. Notwithstanding the foregoing, all such boulevards remain public property, and abutting owners install and maintain plantings and improvements at their own risk. In the event the city or other public entity or public utility interferes with the boulevard plantings, it shall only restore the boulevard by the use of black dirt and grass seed or sod. In no event shall the city be liable for any damage to, disruption of, or removal of plantings or ground cover material, either direct or indirect, as a result of the city, its employees, agents, or contractors, performing any installation, maintenance, or repairs.

K. In accordance with the city of Eau Claire comprehensive plan's chapter on sustainability, and in the interest of public health and safety:

1. The city strongly encourages a "green" approach to the creation and maintenance of boulevards. This would include, but is not limited to the use of natural herbicides and pesticides, conservation of water, biodegradable materials, and runoff mitigation.

2. The city may remove or restrict any plantings or ground cover and restrict the use of herbicides and pesticides. (Ord. 6880, 2009).

8.28.105 Waivers. The weed commissioner may waive the provisions of this chapter in whole or in part, when in the weed commissioner's opinion, an application for waiver is in compliance with a checklist for land management utilizing native grasses and other plants, created and kept on file by the weed commissioner. In addition, a waiver shall only be granted if it shall not detract from the aesthetics of an area, shall not create a nuisance, and shall not otherwise detract from the health, safety, or welfare of the neighbors and community. Denial of such a waiver may be appealed to the Director of Community Development or that person's designee, provided that said appeal is in writing

and is filed no later than 48 hours following denial by the weed commissioner. (Ord. 6675, 2006; Ord. 5144, 1991; Ord. 4869 §7, 1988).

8.28.110 Violation and penalty. Any owner or occupant who violates any of the provisions of this chapter shall, upon conviction, be subject to a forfeiture of not more than $500 for each offense. Each day during which any violation continues shall be deemed to constitute a separate offense. (Ord. 4869 §8, 1988; Ord. 4495, 1984).

Chapter 8.32

MANAGEMENT OF WASTE AND RECYCLABLES

Sections:

8.32.010 Definitions.
8.32.020 Business licenses.
8.32.030 Vehicle permits for licensees.
8.32.040 Refuse hauler.
8.32.050 Responsibilities of refuse haulers and customers.
8.32.060 Industrial hauler.
8.32.070 Recyclable hauler.
8.32.080 Construction/Demolition debris hauler.
8.32.090 Hauler requirements—General application.
8.32.100 Government entities.
8.32.110 Yard waste and composting.
8.32.120 Prohibited practices.
8.32.130 Other methods not excluded.
8.32.140 Violation—penalty.

8.32.010 Definitions. In this chapter, unless the context clearly requires otherwise:

A. "Ashes" means the solid residue of combustion of any type of fuel or combustible material.

B. “Composting” means an organic mixture that consists largely of decayed matter and is used for fertilizing and conditioning land.

C. “Construction/Demolition debris” means solid waste resulting from the construction, remodeling, repair, demolition or razing of buildings, roads and other structures, typically consisting of concrete, bricks, bituminous concrete, wood, glass, masonry, roofing, siding and plaster, alone or in combinations. It does not include hazardous waste or mixed refuse.

D. “Construction/Demolition debris hauler” means persons, firms, or corporations licensed by the city and authorized to exclusively collect, remove and haul construction/demolition debris. A construction/demolition debris hauler may also collect, haul and remove trash and limited refuse.

E. "Curbside and alley line refuse collection service" means the placement and collection of refuse placed adjacent to the traveled portion of the public right of way.

F. “Customer(s)” means person(s) who contract with a hauler licensed under this chapter and whose refuse is deposited of at any licensed landfill or recycling center.

G. "DNR" means the State of Wisconsin Department of Natural Resources.

H. "Garbage" means all putrescible animal or vegetable matter, such as waste materials from kitchens, residences, grocery stores, butcher shops, restaurants, hotels, rooming and boarding houses, and other similar deleterious substances.

I. “Hazardous waste” is as defined in NR 661 and 40 CFR 261.31, 261.32, and 261.33. Hazardous waste typically consists of batteries, waste paints, solvents, sealers, adhesives, petroleum products, pesticides, wood preservatives, or similar materials/wastes alone or in combination or as byproducts of combination or industrial processing.

J. "Health department" means the Eau Claire City-County Health Department.

K. "Health director" means the director of the Eau Claire City-County Health Department or designee.

L. “Industrial hauler” means persons, firms, or corporations licensed by the city and authorized to collect and haul refuse exclusively from a specific industrial business for deposit at a licensed landfill or recycling center.

M. "Mixed refuse" means garbage and trash, placed and stored together.

N. "Prepaid bag" means an approved bag which is purchased through a refuse hauler licensed under this chapter for a price which includes the cost of its collection. Prepaid bags have a minimum thickness of two (2) mils and meet the minimum criteria of the standards of the National Sanitation Foundation.

O. “Recyclable hauler” means any person, firm or corporation that collects and hauls recyclable materials to a transfer station or recycling center.

P. "Recyclable material(s)" or “recyclable(s)” means and includes the following:

1. Aluminum containers.
2. Foam polystyrene packaging.
3. Glass containers, not including window glass, light bulbs, white glass or ceramics.
4. Magazines or other materials printed on similar paper.
5. Newspapers or other material printed on newsprint.
6. Kraft paper.
7. Corrugated cardboard.
8. Office paper.
9. Some plastic containers, pursuant to Chapter 12.73 of the Eau Claire County Code.
10. Steel and bimetal containers.
11. Waste tires.

Q. "Refuse" means all garbage and trash including recyclable materials.

R. "Refuse hauler" means any person, firm, or corporation licensed by the city and authorized to collect refuse weekly on a fixed route from residential and non-residential facilities within the city for deposit at any licensed landfill or recycling center. A refuse hauler may also collect, remove and haul construction/demolition debris.

S. “Special collection” means the health department approved collection of refuse outside of the requirements of this chapter. Note: Special collection typically includes collections such as spring and fall clean-up initiatives, bulk item pick-ups, and recycling initiatives.

T. “Trash" means all nonputrescible solid wastes, consisting of both combustible and noncombustible wastes, such as feathers, rags, paper, boxes, glass, cans, ashes, discarded clothes or wearing apparel of any kind, or any other similar discarded object or thing, including recyclable materials.

U. "Yard waste-compostable" means grass clippings, leaves, yard and garden debris, and woodchips.

V. “Yard waste-non-compostable” means brush such as trunks, limbs, and tree branches that have not or will not be further processed into woodchips meeting the definition of compostable yard waste as in subsection U. above.

W. “Yard waste” means mixed “compostable” and “non-compostable” yard waste under subsections U. and V. above.

<u>8.32.020. Business licenses</u>. A. **Business licenses required**.

1. Except as otherwise provided in this chapter, no person, firm or corporation shall engage in the business of collection and hauling of construction/demolition debris, trash, recyclable material, refuse or garbage in the city without first obtaining a license to operate from the city clerk.

2. A person, firm, corporation, or partnership licensed under this chapter shall be licensed by the DNR under § NR 502.06, Wis. Adm. Code, if applicable. Proof of a current license shall be provided to the city clerk upon request.

B. **Application and Issuance**.

1. Applicant shall submit a completed application to the city clerk along with a license fee and such other information as is required or is reasonably requested by the city.

a. License applications shall be presented on forms prepared by the city clerk.

Forms shall include, but not be limited to, the name of the person, firm or corporation, address, vehicle information, use of landfill or other disposal sites, and nature of business.

b. License applications shall be referred to the health department for consideration and report to the city clerk.

c. License applications in which the applicant proposes to store or dispose of recyclable materials within the city shall be referred to the department of community development for consideration and report to the city clerk. The business location and disposal facility for recyclable materials shall be in conformance with the ordinances and regulations of the city, including zoning regulations. The disposal of recyclable materials at a disposal facility shall comply with all city ordinances and regulations and state laws and regulations.

2. Upon the city council granting a license and satisfaction of all provisions of this code, the city clerk shall provide the applicant with a printed license containing a number identical to the number of the license on record in the office of the city clerk.

C. **Fees**. The license shall be an annual license, expiring on June 30th of each year. The annual license fees shall be as cited in City of Eau Claire Schedule of Fees and Licenses.

D. **Liability insurance**. No license shall be issued until the applicant has furnished the city a certificate of insurance evidencing coverage with an insurance company licensed to do business in the State of Wisconsin, providing auto and general liability insurance limits of not less than one million dollars ($1,000,000) for each occurrence.

E**. Compliance with laws and regulations**. It is a condition of all licenses or permits granted under this chapter that the license holder shall comply with this code, county, state or federal law, the rules and regulations of the Board of Health, and the orders of the health department relating to the collection, hauling, storage and disposal of refuse and mixed refuse, recyclable materials, trash, garbage, construction/demolition debris, yard waste, and hazardous wastes. Non-compliance with any such law, ordinance, rule, regulation or order shall constitute a basis for denial, or for the revocation or suspension of any license or permit.

F. **License or permit—Denial, Revocation or Suspension--Appeal**. Any license or permit issued may be denied, revoked or suspended by the city clerk or health director, upon administrative determination that the licensee or permit holder has failed or refused to comply with the provisions of this code, any such law, ordinance, rule, regulation or order related to the collection, hauling, storage and disposal of refuse and mixed refuse, recyclable materials, trash, garbage, construction/demolition debris, yard waste, and hazardous wastes or for non-use. Appeal from the aforestated determination shall be made to the Administrative Review Board under the procedures specified in Chapter 1.06. Appeal shall stay the contested administrative determination pending decision by the board. No person whose license or permit has been revoked shall again be issued such license or permit under this chapter within one (1) year from the date of revocation.

8.32.030 Vehicle permits for licensees. A. **Permit**. Each vehicle used by a refuse hauler, recyclable hauler or industrial hauler licensee for the collecting of refuse or recyclables shall first be issued a permit. The permit term shall coincide with that of the license under which vehicle is operated. The permit shall not be transferable to another person, firm or corporation.

B. **Application**. Application for such permit shall be on a form prepared by the city clerk. The city clerk shall provide the person obtaining a permit with a permit containing the total number of vehicles on record for that licensee.

C. **Fees**. The annual permit fee for refuse hauling vehicles and for vehicles hauling recyclable materials shall be as stated in the City of Eau Claire Schedule of Fees and Licenses.

D**. Inspection**. Prior to issuance of any such permit, the vehicle shall first be inspected and approved by the health director. If a permitted vehicle breaks down or otherwise becomes mechanically inoperable, only a vehicle that has been inspected and approved by the health director may be substituted. The health department may adopt inspection criteria consistent with this code, county, state or federal law, or to further the interests of public health, safety, or welfare.

E. **Identification**. Vehicles used by the licensee shall have painted or otherwise securely affixed, on both sides of the vehicle, the name, city, state, and U.S. DOT number (if applicable) of the

owner and an identification number specific to each vehicle. The letters and numerals shall contrast sharply in color with the background on which they are placed and be readily legible during daylight hours from a distance of fifty (50) feet while the vehicle is stationary.

F. **Permit exemption**: Vehicles used to transport empty refuse and recycling containers to and from customers under subsection 8.32.050 C.2. shall not be subject to a permit under this section. In the event incidental refuse or recycling is transported in said containers, the containers shall be secured as to not allow dripping, dropping, blowing, or scattering of material therefrom.

8.32.040 Refuse hauler. A**. Business license and permit required**. A refuse hauler shall be licensed under section 8.32.020 and vehicles shall be permitted under section 8.32.030. Businesses licensed as refuse haulers shall obtain recyclable hauler licenses under section 8.32.070; however, said businesses are not required to obtain other licenses under this chapter.

1. Number of licenses.

a. The number of refuse hauler business licenses that may be granted under this chapter shall not exceed seven (7). Such license shall be an annual license in effect from July 1st to June 30th of the following year.

b. No person, firm, corporation or partnership shall hold more than one refuse hauler license. This shall be deemed to prohibit two or more related persons, firms, corporations or partnerships from each holding a license. Under this section, "related", when applied to persons, shall mean related to each other by blood, marriage or adoption. Under this section, "related", when applied to firms, corporations or partnerships, shall mean having the same ownership, being in the position of principal and subordinate or parent and subsidiary, or where one firm, corporation or partnership has a controlling interest in another by virtue of control of management, stock ownership, capital interest or profits interest.

c. If a refuse hauler licensee acquires, merges or combines with or otherwise obtains the refuse hauler license of another licensee, then said license shall be deemed to revert to the city and may be issued to an eligible applicant.

d. By virtue of being issued a refuse hauler license or filing an application, a licensee or applicant agrees to provide to the city, on request, all agreements, records, reports or other documents which may have a bearing on making determinations under this subsection. A failure or refusal to supply all such documents shall subject a licensee to revocation of the license or an applicant to denial of a license. If requested in writing by the licensee or applicant, some or all information contained in such agreements, records, reports or other documents shall be maintained as confidential, to the extent permitted by law, provided that such information may be divulged to the city council and such other officers or employees of the city who have a need to know the information.

2. Transfer of licenses. Refuse hauler licenses may be transferred at any time upon application to the city clerk, payment of a transfer fee as stated in the City of Eau Claire Schedule of Fees and Licenses and approval by the city council. The city clerk shall thereupon issue a new license to the transferee for the unexpired portion of the license, subject to all terms and conditions of this chapter. Vehicle permits are not transferable.

3. Abandonment of license. A refuse hauler license determined abandoned by non-use shall revert to the city and may be issued to an eligible applicant. Under this section, “abandoned” shall mean the license has not been used to collect refuse weekly on a fixed route from residential and nonresidential facilities or the licensee has no vehicle permitted for refuse collection for six (6) months or more of the licensing year. When a license reverts to the city under this section, the licensee shall not be eligible to apply for a refuse hauler license for twelve (12) months from the date the license reverted to the city.

4. Annexed areas--Operator continuance. Any person engaged in the business of refuse hauling in an area at the time it is annexed to the city, and for a period of not less than one (1) year continuously and immediately prior to, may continue to collect refuse in such area after annexation as well as in any other area subsequently annexed from the same township, provided that such person applies for and obtains a license for such purpose from the city council. Such person shall make an application within one hundred twenty (120) days after the effective date of the annexation ordinance. The city council may waive such one hundred twenty (120) day time limit in any case where it finds that extenuating and mitigating circumstances exist which reasonably justify

such waiver, where it finds that the existence of such time limit results in undue hardship upon the applicant due to any such annexation, and where it finds that the spirit of this chapter will be observed. The cost of such license shall be as stated in the City of Eau Claire Schedule of Fees and Licenses, ending on June 30th of each year, and may be prorated. Such licensee shall meet all standards and comply with all conditions otherwise applicable to licensees as provided in this chapter.

B. **Recycling fees and reporting**.

1. Fees. No fee or charge shall be imposed by a licensee for the collection and disposal of recyclables, except that such a fee or charge can be imposed to the extent authorized by Eau Claire County acting as a responsible unit for recycling purposes pursuant to Chapter 287, Wis. Stats. The amount of such fee or charge shall not exceed the rate of special charge for recycling purposes set by Eau Claire County for entities located outside the city of Eau Claire. In this section "recyclables" shall mean those materials which owners or occupants of single-family and 2 to 4 unit residences are required to separate from other refuse pursuant to subsection 12.73.100 A. of the Eau Claire County Code.

2. Monthly reporting. A licensee providing recycling services as provided in subsection 1. above shall submit a monthly report no later than twenty one (21) days after the end of the preceding month to the Eau Claire County Department of Planning and Development containing the following information:

a. The number of dwelling units serviced during the reporting month, with at least the following categories itemized: single family homes, duplexes, triplexes, and four-plexes.

b. The weights of recyclables collected during the reporting month, with at least the following materials and respective weights collected itemized: clear glass; brown glass; green glass; tin and bi-metal; aluminum; plastic as required by section 12.73.100 of the Eau Claire County Code; corrugated cardboard; newspapers; office paper; magazines and catalogues.

C. **Charge for up-the-driveway refuse collection service**. The charge by the licensee for mandatory once-a-week up-the-driveway collection service pursuant to subsection 8.32.050 B.5.b. shall be the cost of curbside or alley line collection service plus an additional fee not to exceed $10 per month, except properties with unusually long driveways for which a surcharge may be added.

<u>8.32.050 Responsibilities of refuse haulers and customers.</u> The following are the responsibilities of refuse haulers and customers:

A. **Mandatory separation**.

1. Recyclable materials. Customers shall separate recyclables from refuse as required under Chapter 12.73 of the Eau Claire County Code.

2. Yard waste. Customers shall separate yard waste from all other refuse.

B. **Collections**.

1. Requirement and frequency. Curbside or alley line collection or up-the-drive collection of recyclables and refuse shall be provided to customer by each licensee at least once each week.

2. Times for collection.

a. Collection shall occur between the hours of five (5:00) a.m. and five-thirty (5:30) p.m., except as provided in subsection 6. below.

b. Containers shall be placed for collection no earlier than five (5:00) p.m. on the day prior to collection and shall be removed on the day of collection.

c. Containers that are collected from legal or approved container storage areas shall not be subject to subsection b. above.

3. Days for collection. Such collection occurs on the days designated for the area listed:

a. Monday and Tuesday -- the area located south of Clairemont Avenue and east of the Chippewa River.

b. Tuesday and Wednesday -- the area located north of Clairemont Avenue, east of the Chippewa River and south of the Eau Claire River.

c. Wednesday and Thursday -- the area located west of the Chippewa River.

d. Thursday and Friday -- the area located east of the Chippewa River and north of the Eau Claire River.

4. Holidays. When the regular collection day falls on one of the following holidays,

such regular collections may be rescheduled to another day during the week of such holiday, and the licensee shall inform each customer of the rescheduled collection day. The holidays herein referred to are New Year's Day, Memorial Day, July Fourth, Labor Day, Thanksgiving Day and Christmas Day.

5. Placement and accessibility for collection.

a. Curbside or alley line collection. For curbside or alley line collection, refuse and recycling containers shall be readily accessible to the collector on the day of collection. No containers shall be placed for collection in, and no collection shall occur from, the traveled portion of the public right of way. Containers shall be placed adjacent to the traveled portion of the public right of way, unless other arrangements are made under subsection b. below.

b. Up-the-drive collection. Upon arrangement with the licensee, refuse and recycling containers may be placed at a readily accessible location other than as listed in subsection a. above. For special assistance to persons with disabilities or advanced age, collection may be made from a location outside of a building, an enclosed porch, garage or similar enclosure, but as near thereto as is reasonably practicable. No containers shall be placed for collection in, and no collection shall occur from, the traveled portion of the public right of way.

6. Additional collection services. The following types of services may be provided by a licensee in addition to the once-weekly service provided pursuant to subsection B. above:

a. Collection utilizing a prepaid bag. Such bag shall be placed for collection at a location which is visible to the operator of a collection vehicle from the street or alley on the route of the vehicle. Such bags shall be stored in an approved plastic or metal container, as specified in subsection C.2. below and may be placed, securely closed, outside of such container for collection. The rate charged for said collection may be agreed upon by the customer and licensee.

b. Special collection services.

i. Collection services, the terms of which may include collection at more frequent intervals, collections from inside a building, porch, garage or other enclosure, or any other conditions of collection which are not contrary to the provisions of this chapter. The rate charged for said collection may be agreed upon by the customer and licensee.

ii. The hours and days of collection stated in this chapter may be altered or extended for a reasonable time by the health director under special circumstances which in the opinion of that person are likely to affect the health, safety and welfare of persons or the community. Alterations or extensions may be city-wide or restricted to designated areas.

iii. Curbside or alley line collection of bulk items and yard waste shall be permitted on weekdays during two full weeks in April or May and two full weeks in October without compliance with subsections B.2. and B.3. above and subsection C. below, provided no charge is imposed for such collection and such collection is made in conjunction with a city-wide collection of refuse by a licensed refuse hauler. “Bulk items” means items such as furniture and other items subject to refuse hauler approval.

iv. The health department may approve special collections and transport projects for compost, refuse, or yard waste which do not affect the health, safety, and wellness of persons or the community.

C. **Garbage, trash and recycling containers**.

1. Violation. It is unlawful for the agent, owner, tenant or occupant of any premises to have, maintain, or keep any garbage and mixed refuse thereon except in containers as described in this section.

2. Mixed refuse containers. Such containers shall be composed of rigid, durable materials, have tight fitting covers, be fitted with handles, and be capable of preventing leakage or the entrance of water, insects and animals. Garbage or mixed refuse shall be stored within such container with the lid closed.

a. Refuse hauler provided containers. Refuse haulers providing containers used for curbside and alley line collection service under subsection B.5.a. above shall offer collection from a container having a capacity of forty five (45) gallons or less. If the licensed hauler also offers collection from containers larger than forty five (45) gallons, the charge for such larger containers shall be volume-based. In this section, "volume-based" means the charge for refuse collection is increased as the container size increases. All containers shall be provided to the customer without

charge by the refuse hauler. The container shall display the name of the hauler in a manner which is readily identifiable from the right of way adjacent to the location of collection, and the container shall display a weather-resistant label that includes the regulations for storage and collection of refuse in conformance with guidelines established by the health department.

b. Other containers. Persons, firms or corporations with up the drive service under subsection B.5.b. above and providing their own containers shall have containers not exceeding thirty five (35) gallons in capacity. Containers having a capacity larger than thirty (35) gallons may be used by a refuse hauler for collection service under subsection B.5.a. above, provided the size and placement of such containers and the charge for such service shall be consistent with this code, or county, state or federal law.

c. Recycling containers. Recyclable materials shall be placed in containers in such a manner that complies with Chapter 12.73 of the Eau Claire County Code. Refuse haulers shall provide required recycling containers at no additional cost to customers.

3. Regulations. All containers under subsection C.2. above are subject to the following regulations:

a. Garbage or mixed refuse shall be placed in plastic bags or otherwise adequately wrapped before being placed in containers.

b. The total capacity of all provided containers and all bulk storage containers shall be sufficient to meet the needs of the occupants of the premises to which they relate; the adequacy of the size and number of containers may be determined by the health department.

c. All containers shall be easily filled, emptied and cleaned, and shall be maintained at all times in a clean and sanitary condition.

d. All containers in residential areas shall be stored behind the setback of a dwelling and shall not be stored on front porches or where they are clearly visible from any street except for the purposes of collection under subsection B above.

e. All containers for dwellings containing more than two (2) dwelling units shall be stored in a location not visible from any street, except for the purposes of collection under subsection B above.

4. Trash containers. Trash may be put in boxes, barrels or other containers which are easy to handle and load by one person onto a collection vehicle.

5. Bulk storage containers. Bulk storage containers which are used for the storage of garbage or mixed refuse for dwellings or for commercial operations, shall be watertight, constructed of metal or other durable material impervious to rodents, capable of being serviced without creating unsanitary conditions, and equipped with doors or covers that are tight-fitting. Such containers, as well as the area immediately surrounding them, shall be maintained in a clean sanitary condition by the owner of such container.

D. **Responsibilities**.

1. Refuse haulers providing containers shall monitor the condition of their containers provided to customers and replace them when they do not meet the standards set forth in this chapter.

2. If the agent, owner, tenant or occupant provides its own containers for any premises, then the agent, owner, tenant or occupant shall monitor the condition of their containers and replace them when they do not meet the standards set forth in this chapter.

3. Refuse and recyclable materials shall be placed for collection in such a manner that does not create a public nuisance.

4. A refuse hauler can refuse to perform any collection which is not in consistent with this code or county, state or federal law.

5. Refuse haulers providing collection services shall inform all customers of their refuse collection responsibilities.

6. Residential landlords shall notify tenants in writing at the beginning of a lease or rental period of the tenant's responsibilities under this chapter. The information provided shall be in compliance with guidelines established by the health department. (Ord 7350 §1, 2019)

8.32.060 Industrial hauler. A. **Business license and permit required**. An industrial hauler shall be business licensed under section 8.32.020 and vehicles shall be permitted under section

8.32.030. Such license and permit are not transferable. An industrial hauler shall have no additional licenses under this chapter.

B. **Vehicles**. The industrial hauler license shall specify the number of vehicles which are permitted to be used by the licensee. The change in the number of permitted vehicles may be authorized, upon application, by the city council.

C. **Prohibition**. No vehicle so authorized shall be used to collect or haul refuse from any place other than the specific industrial establishment or establishments which are specified in the license.

8.32.070 Recyclable hauler. A. **Business license and permit required**. A recyclable hauler shall be business licensed under section 8.32.020 and vehicles shall be permitted under section 8.32.030. Such license and permit are not transferable.

B. **Prohibition**. Licensees under this section shall not engage in fixed-route collections or residential collections unless also licensed as a refuse hauler under section 8.32.040. Recyclable haulers under this section may engage in destination oriented hauling related to their business.

C. **Requirements.** For the hauling and disposal of recyclable materials, licensees shall adhere to and be consistent with this code, or county, state or federal law. Under this section, recyclables are limited to the recyclable materials listed in subsection 8.32.010 P.

D. **Special collections.** The health department may approve special collections and transport projects for recyclables which do not affect the health, safety and wellness of persons of the community.

8.32.080 Construction/Demolition debris hauler. A. **Business license required**. A Construction/Demolition debris hauler shall meet the licensing requirements under section 8.32.020. Licenses are not transferable.

B. **Prohibition**. Licensees under this section shall not engage in fixed-route collections, but may engage in destination oriented hauling related to their business.

C**. Limited garbage and mixed refuse collection and hauling**.

1. Licensees under this section may collect or transport refuse from a premises, such that the total accumulation of such mixed refuse or garbage on the said property does not exceed fifty five (55) gallons. If the total accumulation of such mixed refuse or garbage is greater than fifty five (55) gallons, a licensed refuse hauler, subject to the rules of this chapter, shall be contracted with to provide the collection and hauling service.

2. Mixed refuse or garbage accumulation that does not exceed fifty five (55) gallons shall be collected and transported in approved containers per subsection 8.32.050 C.2. and in such a way that the vehicle requirements of subsection 8.32.090 A. are met.

3. Licensees under this section shall transport mixed refuse or garbage by the most direct route to a transfer station or a licensed landfill.

D. **Recyclables materials**. Licensees under this section collecting and hauling recyclable materials listed in subsection 8.32.010 P. shall obtain a recyclable haulers license under section 8.32.070.

E. **Special collections.** The health department may approve special collections and transport projects for construction/demolition debris which do not affect the health, safety and wellness of persons of the community.

8.32.090 Hauler requirements-general application. A person, firm or corporation subject to requirements of this chapter hauling construction demolition debris, trash, recyclable material, yard waste, refuse or garbage shall meet the following requirements:

A. **Vehicles**.

1. Trucks, trailers or other vehicles used in collection or hauling shall be of such construction that there will be no dripping, dropping, blowing, or scattering of material therefrom along streets, alleys or highways of the city, or public/private property and as not to cause a nuisance.

2. Trucks, trailers or other vehicles shall have a cover. Trees, branches, shrubs or other similar stable material may be tied or otherwise secured in lieu of providing such cover, provided the dropping or scattering of such material is thereby prevented.

3. Truck, trailer and vehicle collection openings shall be kept closed at all times, except when loading or unloading.

4. Trucks, trailers or other vehicles shall be kept off the streets of the city except for the purpose of collecting and transporting in the most direct route to a licensed landfill or other appropriate disposal site, and shall not be parked on any street, alley or public place except for the reasonable time required in the collection.

5. Except as provided in subsection 4. above, no truck, trailer or other vehicle used in collecting or hauling refuse or mixed refuse shall be parked in any alley, street or public place within the city or, unenclosed, in any place within the city within two hundred feet of any dwelling in any residential zone unless such trailer, truck or other vehicle has first been thoroughly cleaned and steamed.

6. Trucks, trailers or other vehicles shall have painted or otherwise securely affixed, on both sides of the vehicle or trailer, the name, city, state, and U.S. DOT number (if applicable) of the owner and an identification number specific to each vehicle. The letters and numerals shall contrast sharply in color with the background on which they are placed and be readily legible during daylight hours from a distance of fifty (50) feet while the vehicle is stationary.

B. **Containers**. Containers shall meet the standards set forth below and shall be replaced when they do not meet said standards.

1. All mixed refuse containers shall be composed of rigid, durable materials, have tight fitting covers, be fitted with handles, and be capable of preventing leakage or the entrance of water, insects and animals. Garbage or mixed refuse shall be stored within such container with the lid closed.

2. Bulk storage containers which are used for the storage of garbage or mixed refuse for dwellings or for commercial operations, shall be watertight, constructed of metal or other durable material impervious to rodents, capable of being serviced without creating unsanitary conditions, and equipped with doors or covers that are tight-fitting.

3. Roll-off boxes of varying size shall not contain mixed refuse or garbage and shall be constructed of durable materials and maintained in good condition. Such containers, as well as the area immediately surrounding them, shall be maintained in a clean sanitary condition by the owner of such container. Placement of roll-off boxes in the public right-of-way requires a permit and is subject to regulation under section 13.12.055 of this code.

4**.** Recyclable materials shall be placed in containers in such a manner that complies with Chapter 12.73 of the Eau Claire County Code.

5. The total capacity of all containers shall be sufficient to meet the needs of the occupants of the premises to which they relate.

6. All containers provided by haulers shall have a weather-resistant label affixed in a visible location which states the name of the hauler and contact information.

C. **Prohibited materials-unacceptable wastes**. The following materials shall be collected, hauled, and disposed of in accordance with applicable state and federal laws: explosive, flammable liquids, liquid paint, hazardous wastes, carcasses, stumps, significant amounts of construction/demolition debris, soil, rocks, medical and infectious waste, tires, human bodily wastes, or other similar materials.

D. **Subject to inspection**. The health department may investigate and inspect the condition and contents of any truck, trailer or vehicle, or any container. The health department may issue orders including cease and desist orders to any person, firm, or corporation in violation of this code or county, state or federal law. Such orders will remain in effect until such time as the health department has satisfactory evidence that the cited violation has been corrected.

8.32.100 Government entities. Government entities are exempt from business licensing and vehicle permits under this chapter. Government entities hauling refuse or recyclables shall provide to the health department an annual certificate of inspection for all vehicles used for hauling refuse or recyclables within the city. This section does not exempt a government entity from any DNR licensing requirements under § NR 502.06, Wis. Adm. Code.

8.32.110 Yard waste and composting. A. **Disposal options**.

1. Approved brush site. Non-compostable yard waste may be taken to and disposed of at an approved brush collection site. Transportation of said waste shall comply with subsection B.2. below and section 8.32.090.

2. Business. A customer may contract with a person, firm or corporation who engages exclusively in the business of collecting and disposing of yard waste.

3. Compostable bags. Compostable yard waste shall be placed in compostable bags which are easy to handle by one person. Transportation and collections shall comply with subsection B. below and section 8.32.090.

4. Burning of yard waste.

a. In addition to all applicable local and state laws, no person, firm or corporation in the business of collecting and disposing of yard waste shall engage in the burning of yard waste within the city without obtaining the prior approval of the health department. The health director may deny any request for such approval if it is found that such burning is reasonably likely to cause excessive heat, smoke, or discharge of particulates, or would result in a public nuisance. The health director may place requirements upon any approval granted hereunder which are designed to avoid such conditions.

b. All burning shall be in compliance with Chapter 8.04 of the Eau Claire County Code.

c. All burning shall be in compliance with section 16.32.15 of this code.

B. **Collection and hauling of yard waste**.

1. A person, firm or corporation who engages exclusively in the business of collecting and disposing of yard waste is not required to be licensed under section 8.32.020, but shall adhere to the requirements of section 8.32.090.

2. Yard waste (non-compostable) shall be securely tied in bundles not greater than four (4) feet in length, thirty (30) inches in diameter, or seventy five (75) pounds in weight.

3. Yard waste (compostable) shall be placed in compostable bags which are easy to handle by one person.

4. Prohibitions and refusal of service. Except when permitted by county ordinance or by this chapter under subsection 8.32.050 B.6.b.:

a. No person, firm or corporation shall place for collection by a licensed hauler or deposit in any landfill any yard waste;

b. No licensed hauler shall collect any yard waste for deposit at any landfill, or

c. Any yard waste placed for collection not in accordance with the provisions of this section may be refused by the licensed hauler.

C. **Residential composting**. Residential composting is the creation and maintenance of compost bins on a residential property that contain only composting materials generated by the owner or occupant of said property. Materials for composting may not be transferred from one property to another.

1. Composting standards. The health department may adopt residential composting standards consistent with this code, county, state or federal law, and to further the interests of public health, safety or welfare.

2. Nuisance. No person shall engage in residential composting in such a manner as to create a nuisance under this chapter or Chapters 9.36 or 8.32 of this code.

8.32.120 Prohibited practices. A. **Seven day retention**. No garbage, mixed refuse or dead animals, excluding materials used for and following the provisions of subsection 8.32.110 C. for composting, shall be kept more than seven (7) days on any premises within the city except at an approved and properly licensed sanitary landfill site.

B. **Mandatory separation of recyclables**. Residential and non-residential facilities shall not comingle recyclables with refuse. Mandatory separation of recyclables and refuse is required under Chapter 12.73 of the Eau Claire County Code.

C. **Mandatory separation of yard waste**. Residential and non-residential facilities shall not comingle yard waste with refuse.

D**. Prohibited dumping**.

1. It is unlawful for any person to dump or otherwise dispose of any refuse upon

any street, alley, highway, streams or water within the city, or at any place except as provided in this chapter.

2. No person shall deposit any refuse or yard waste on the lawn, dumpster, refuse container located in or upon commercial or residential property without the express permission of the property owner or lessee of said property.

E. **Disturbance of refuse and recycling containers**. No person shall open or disturb any refuse or recycling bag or container in a manner that would cause or contribute to litter.

F. **Prohibited materials in roll-off boxes**. It is unlawful for any person, firm or corporation to dispose of garbage or mixed refuse, hazardous materials or unacceptable waste pursuant to subsection 8.32.090 C. in roll-off boxes that do not meet the requirements of containers under subsection 8.32.090 B or any other county, state or federal laws governing disposal. Any spills or damage caused by violation of this subsection shall be responsibility of the person, firm or corporation in violation.

G. **Private dump sites**. No person shall own, operate or maintain a dumping site or landfill within the city except where the same has been approved by the DNR or other governmental agency having jurisdiction thereof, where approval is required, and such site shall be operated and maintained in a manner which does not create a nuisance.

H. **Filling real property**. No person owning or managing real property within the limits of the city shall collect refuse for the purpose of filling.

I. **Deposit of refuse**. No person owning, occupying or managing any real property within the limits of the city shall cause or permit any refuse other than that produced on the premises to be placed for collection. No person shall use any public receptacle for the disposal of refuse as a substitute for private collection.

J. **Refuse accumulation--Nuisance when**. The accumulation or deposit of refuse, trash or putrescible animal or vegetable matter, wood products, paper products, branches, metal objects, tires and other rubber products, and other similar articles or objects in or upon any lot or land or any public or private place within the city which causes blight or the air or environment to become noxious or offensive or to be in such a condition as to promote the breeding of flies, mosquitoes or other insects, or to provide a habitat or breeding place for rodents or other animals, or creates a fire hazard, or which otherwise becomes injurious to the public health, is prohibited and declared to constitute a nuisance. Refuse accumulation under this chapter may also be declared a public nuisance under Chapter 9.36 of this code.

K. **Improper storage of furniture**. No person shall place and allow to remain exposed to the elements, whether outdoors or within an unenclosed porch or similar area, any chair, sofa, bed, table or other related or similar furniture, which is not designed and intended for outdoor use and which is thereby readily susceptible to deterioration or which thereby provides a harborage for rodents. This section shall not apply to furniture which is unused and placed outside as refuse for collection and disposal.

L. **Manure storage**. Manure shall not be kept or maintained in a manner such that it creates unsanitary conditions or a nuisance. Manure shall be collected and disposed of pursuant to subsection 6.08.060.

M. **Toxic/hazardous, infectious, and medical wastes**. No person shall keep, collect, or dispose of toxic, hazardous, infectious, or medical wastes in such a manner as to violate any applicable state and federal laws governing the disposal of such wastes.

N. **Abandoned refrigerators**.

1. No person, firm or corporation as the owner, lessee or manager shall abandon, discard, store or keep in any place or premises under his control, which is accessible to children, a refrigerator, icebox, freezer cabinet or other container of a capacity of one and one-half cubic feet or more, which is no longer used for refrigeration purposes, without the attached doors, lids, covers, hinges or latches removed.

2. The provisions of subsection 1 shall apply to the removal of said articles to any other place or premises for the purpose of dumping or discarding the same.

O. **Burning of garbage or trash.**

1. No person shall burn any garbage or trash in any receptacle.

2. Under special circumstances, a license may be obtained for the operation of an incinerator which is designed and operated in accordance with all applicable governmental

regulations and standards. Any such incinerator is subject to licensing and regulation as outlined in subsection 8.04.050 of the Eau Claire County Code.

P. **Ash disposal**. Ashes shall be adequately cooled and dried before being placed out for collection.

8.32.130 Other methods not excluded. The provisions of this chapter are not exclusive and may be used in combination with each other or with any other section of the code or state or federal law applicable to this subject matter.

8.32.140 Violation--Penalty. Any person, firm or corporation who violates any of the provisions of this chapter, upon conviction thereof, shall forfeit not less than $20 nor more than $500, exclusive of costs, for each offense, and in default of payment thereof shall be imprisoned in the county jail for not to exceed thirty days unless such forfeiture and costs are sooner paid. Every day of violation shall constitute a separate offense. (Ord. 7010, 2012)

Chapter 8.36

INOPERATIVE MOTOR VEHICLES

Sections:

8.36.005 Purpose and intent.
8.36.010 Definitions.
8.36.020 Storage prohibited.
8.36.030 Storage--Permitted when.
8.36.040 Notice of removal.
8.36.050 Violation--Penalties.

8.36.005 Purpose and intent. The purpose and intent of this chapter is to eliminate the inappropriate and unnecessary keeping and storage of inoperative motor vehicles and motor vehicle accessories on private property. The city council finds that such keeping and storage is unsightly, unhealthy and unsafe, and contrary to the health, safety and welfare of the residents of the City of Eau Claire. (Ord. 5669 §1, 1996).

8.36.010 Definitions. For the purpose of this chapter the following definitions shall be applicable:

A. "Inoperative motor vehicle" means any motor vehicle which satisfies one or more of the following criteria:

1. That is partially dismantled or wrecked;
2. That is not operable;
3. That is unlicensed;
4. That could not be safely or legally operated on a highway;
5. That has become a habitat for rodents, vermin or insects;
6. That in any other way constitutes a threat to the public health or safety; or
7. That has not been moved for a continuous period of more than 45 days.

B. "Motor vehicle" means any self-propelled land vehicle which can be used for towing or transporting people or materials, including but not limited to automobiles, trucks, buses, motorized campers, motorcycles, motor scooters, and tractors.

C. "Motor vehicle accessories" means any part or parts of any motor vehicle.

D. "Private property" means any real property not owned by the federal government, state, county, city school board or other public subdivisions.

E. "Removal" means the physical relocation of a motor vehicle to an authorized location. (Ord. 4799, 1988; Ord. 3115 §I(part), 1979; Prior code §4.18(1)).

8.36.020 Storage prohibited. A. It shall be unlawful for any person to allow, or any property owner to allow to be kept, any inoperative motor vehicle or motor vehicle accessories on any private property within the city.

B. No person, after notification to remove any inoperative motor vehicle or motor vehicle accessories from any private property has been given pursuant to this chapter, shall move the same to any other private property upon which such storage is not permitted or onto any public highway or other public property for purposes of storage. (Ord. 4799, 1988; Ord. 3115 §I(part), 1970; Prior code §4.18(2)).

8.36.030 Storage--Permitted when. A. This section shall not apply to any motor vehicle or motor vehicle accessories stored within an enclosed building, or on the premises of a business enterprise operated in a lawful place and manner when necessary to the operation of such business enterprise, in a storage place or depository maintained in a lawful place and manner, or to seasonal use vehicles such as campers, etc. Such business enterprises shall include auto junk yards, auto repair and auto body shops but shall not include automobile service stations or tire, battery and accessory sales stores.

B. This chapter shall not apply to any motor vehicle or parts car which is legally stored pursuant to s. 341.266 of the Wisconsin Statutes. However, such storage shall be subject to local zoning rules and regulations. (Ord. 4799, 1988; Ord. 3115 §I(part), 1970; Prior code §4.18(3)).

8.36.040 Notice of removal. Any person found in violation of the provisions of this chapter shall be given written notice by the building inspector or that person's designee requiring compliance with the provision of this chapter within 14 days of mailing of that notice. The notice shall include a description of the inoperative motor vehicle or motor vehicle accessories, the location or address of the item(s) in violation, and that failure to comply with the provisions of this chapter may result in forfeitures being assessed. Additionally, the notice shall inform the violator that removal from the specified location to another location upon which such storage is not permitted is prohibited and shall subject the person to additional penalties. Notice is not required for second and subsequent violations occurring within a one-year period of the first violation of this chapter. (Ord. 6465, 2004; Ord. 5669 §2, 1996; Ord. 4799, 1988; Ord. 3115 §I(part), 1970; Prior code §4.18(4)(b)).

8.36.050 Violation--Penalties. A. Any person violating the provisions of this chapter shall upon conviction forfeit not less than $25 nor more than $200 for a first offense within a one- year period. Failure to make payment thereof shall result in confinement in the county jail for a period not to exceed 30 days.

B. Any person convicted of a violation of this chapter shall upon conviction forfeit not less than $100 nor more than $300 for a second offense within a one-year period. Failure to make payment thereof shall result in confinement in the county jail for a period not to exceed 30 days.

C. Any person convicted of a violation of this chapter shall upon conviction forfeit not less than $200 nor more than $500 for a third offense within a one-year period. Failure to make payment thereof shall result in confinement in the county jail for a period not to exceed 30 days.

D. Each day of violation shall constitute a separate offense, and where there is more than one inoperative vehicle involved, each vehicle constitutes a separate offense. (Ord. 4799, 1988; Ord. 3115 §I(part), 1970; Prior code §4.18(5)).

Chapter 8.40

MISCELLANEOUS SANITARY REGULATIONS

Sections:

8.40.010 Health department.
8.40.020 Storm sewers--Prohibited material.
8.40.030 Rubbish disposal--River banks--Streets.
8.40.040 Odorous premises prohibited.

8.40.050 Privies--Cleaning.
8.40.060 Food processor--Storage buildings.
8.40.070 Premises inspection--Violations investigation.
8.40.080 Food and drink examination authority.
8.40.090 Inspection--Right of entry.
8.40.100 Secondhand goods--Clean before sale.
8.40.110 Dense smoke--Nuisance when.
8.40.120 Burning rubber.
8.40.130 Coal dust.
8.40.140 Noxious gases and odors.
8.40.145 Storage of firewood.
8.40.150 Police enforcement.
8.40.160 Violation--Penalty.

8.40.010 Health department. All the provisions and amendments of Section 140.09 of the Wisconsin Statutes for 1965 are adopted and by reference made a part of this chapter. (Prior code §4.01).

8.40.020 Storm Sewers--Prohibited material.* It shall be unlawful to directly or indirectly discharge or cause to be discharged the following materials into any city storm sewer:

A. Any gasoline, benzine, naphtha, fuel oil, motor oil or any other flammable or explosive liquid, solid or gas.

B. Lawn clippings, leaves, dirt, sweepings or other refuse.

C. Any other deleterious substances. (Ord. 7239 §7, 2017; Ord. 6012, 2000; Ord. 4679, 1986; Prior code §4.02).

For additional requirements see Title 19 entitled "Stormwater".

8.40.030 Rubbish disposal--River banks--Streets. A. No person shall throw or deposit or permit to be thrown or deposited any dirt, paper or filth, the sweepings of any house, store or shop or office, or any ashes, shavings, straw, wood, manure or rubbish of any kind into the Chippewa River or on the banks thereof or into the Eau Claire River or upon the banks thereof within the city.

B. It is unlawful and all persons are prohibited from placing, putting or throwing any leaves, straw, brush, tin cans, bottles, sticks, boards, ashes or any rubbish of any kind whatever or placing or throwing any swill, brine, urine, manure or any other filthy or offensive substance, or any stinking or nauseous liquid upon or along the sidewalk, street, alley or public place in the city. (Prior code §4.03).

8.40.040 Odorous premises prohibited. Every person owning, operating or having the charge, care and custody of any brewery, distillery, factory, soap making, soap boiling establishments, livery stable, hog pen or place where hogs are kept, or place where hides are bought, sold or stored in the city, shall keep the same together with all barns, sheds, outhouses, hog pens, hen roosts or other buildings connected therewith, in a cleanly and good condition, and so provide that no nauseous effluvia or smell shall arise or emanate therefrom. And no nauseous or filthy matter of any kind shall be allowed to remain in or about said premises. (Prior code §4.05).

8.40.050 Privies--Cleaning. Water closets and privies. Every person owning or having on any premises owned or occupied by him, any privy or water closet, shall cause the same to be thoroughly cleaned at least twice in every year; on and between the first day of April and the first day of November in each year. In addition to the provisions hereinbefore contained regarding the cleansing and cleaning of privies twice in each year, the city manager or the department of health may at any time, if in their judgment the health of the city requires it, direct any person owning or having upon any premises occupied by him, any privy or water closet, to thoroughly cleanse and clean the same and cause all offensive, noxious or filthy matter to be removed therefrom. And the health department may at any time require any person so having, on any premises owned or occupied by him, any such privy or water closet, to cause the same to be disinfected with such disinfecting material as such health department may require or direct, and all privies, water closets and the vaults

connected therewith shall be kept in a clean and good condition, so that no noxious smell or effluvia shall proceed, or emanate or arise therefrom. (Prior code §4.06).

8.40.060 Food processor--Storage buildings. A. All buildings and rooms used for manufacturing, preparing for sale, storing, offering, or exposing for sale or selling any food, drug, condiment or drink shall be kept in a clean sanitary condition, well lighted and ventilated, free from bad odors, dust, filth, flies and other contamination, or other unclean, unhealthful, unsanitary conditions.

B. All foods manufactured and prepared for sale during the process of its manufacture or its preparation for sale, shall be securely protected from filth, flies, dust or other contamination, or other unclean, unhealthful or unsanitary conditions. All foods stored or offered or exposed for sale, sold or delivered, shall be securely protected from filth, flies, dust or other contamination, or other unhealthy, or unsanitary conditions.

C. Any food, drug, condiment or drink manufactured, offered or exposed for sale or sold, stored or delivered contrary to the provisions of this chapter shall be subject to confiscation and may be seized and turned over to the proper authorities of the city, who may destroy the same. (Prior code §4.08).

8.40.070 Premises inspection--Violations investigation. It shall be the duty of the health department and of every policeman of the city to, at all reasonable times, examine slaughterhouses, packing houses, meat markets, butcher shops, breweries, distilleries, factories, soap boiling establishments, livery stables, privies and water closets in the city, and to inquire into any evasions or infractions or violations of any of the provisions of this chapter, and such officers shall have and be permitted at all reasonable hours of the day free access upon the premises of all such places named in this chapter, for the purpose of inspecting and examining the same. No person shall interfere with, hinder, delay, molest or prevent the health department or any policeman in the discharge of his duty, as prescribed by this chapter. (Prior code §4.07).

8.40.080 Food and drink examination authority. It shall be the duty of the health department, in addition to its other duties, to see that all the provisions of this chapter are complied with, and for that purpose may at frequent intervals inspect and ascertain the sanitary conditions of each place visited. Any of its officers or employees may enter any building, room or basement or any other place, in which there is, or they have good reason to believe that any food, drink, condiment or drug is manufactured, stored or offered for sale or sold, to inspect the same and inspect any food condiment or drink, prepared, stored, exposed, offered for sale or having in possession with intentions to sell or be sold, the quality of the ingredients used, the conditions of the apparatus, show cases, shelves and containers used in preparing, displaying, storing, shipping and delivering the same. The health department, its inspectors or agents shall have authority to stop and inspect any wagon, cart or vehicle used in delivering any of the above named foods. A sufficient number of samples shall upon request of the health director be delivered to said department free of charge for purposes of examination. (Prior code §4.09).

8.40.090 Inspection--Right of entry. No person shall obstruct or hinder the city health department or any of its inspectors or agents in the performance of their duties by refusing entrance to any place they are authorized to enter. (Prior code §4.10).

8.40.100 Secondhand goods--Clean before sale. No sale of cast-off or secondhand clothing, or wearing apparel of any kind, or secondhand bedding, household goods, furniture or articles shall hereafter be permitted to be sold at so called "Rummage Sales" within the city, without such castoff clothing and wearing apparel and secondhand bedding, household goods, furniture and other similar articles first having been thoroughly fumigated, disinfected, renovated and cleansed under the direction and superintendency of the board of health of the city, and subsequently thereto examined and inspected by the board. (Prior code §4.11).

8.40.110 Dense smoke--Nuisance when. The emission of dense smoke, soot or cinders from the smokestack of any locomotive or from any chimney or smokestack is declared a nuisance

and the same is prohibited. Smoke shall be deemed dense under the terms of this chapter when it contains soot or other substance in sufficient quantities to permit the deposit of such soot or other substances on any surface within the limits of the city. In these sections of the city zoned and districted as industrial zones the emission of dense smoke for a period of six minutes in any one hour during which the firebox is being cleaned out or a new fire being built therein is excepted from the provisions of this section. (Prior code §4.12).

8.40.120 Burning rubber. The burning or use of rubber tires, rubber products, tar, pitch, tar paper or other refuse for fuel, or otherwise, in any form giving off or producing dense smoke or offensive odors is prohibited. (Prior code §4.13).

8.40.130 Coal dust. No person shall for a period longer than forty-eight hours store coal in an open and exposed place to the wind unless such coal receives or has previously received treatment by oil, or by other equivalent process that will to an equal degree reduce the dust therefrom. This section shall not apply to industrial zones unless the location of such coal is in such close proximity to a dwelling(s) or other occupied structure as to be injurious to health or property or to create a nuisance. (Prior code §4.14).

8.40.140 Noxious gases and odors. Industries necessarily creating noxious gases or odors, upon order of the board of health, with not less than thirty days' written notice, shall whenever possible provide such purification or deodorant methods for the treatment of noxious gases as shall abate the condition or provide such ventilating equipment and diffusing stacks as shall discharge such noxious gases into the upper air at a height which will avoid nuisance, and all such structures and the operation and maintenance thereof shall be subject to the approval of the board of health. (Prior code §4.15).

8.45.145 Storage of firewood. Firewood may be stored in any yard other than the front yard or corner sideyard, provided that it is stored in a neat, orderly, secure stack not exceeding 6 feet in height, and the wood stack is not infested with rodents. (Ord. 6483 §1, 2004).

8.40.150 Police enforcement. It shall be the duty of every police officer and sanitary inspector to see that Sections 8.40.110 through 8.40.140 inclusive are enforced. (Prior code §4.16).

8.40.160 Violation--Penalty. Any person, firm or corporation violating the provisions of this chapter shall upon conviction be fined not less than five dollars, nor more than one hundred dollars, for each and every offense, together with the cost of prosecution and upon failure to pay the same shall be confined in the county jail not more than thirty days unless such fine and costs are sooner paid. Each day of violation shall constitute a separate offense. (Prior code §4.17).

CHAPTER 8.44

UNDERGROUND UTILITIES REQUIRED

Sections:

8.44.010 Purpose.
8.44.020 Underground adaptation required.
8.44.030 Area affected.
8.44.040 Penalty.

8.44.010 Purpose. The City Council does hereby find and determine that the existence of utility poles, overhead wires, and related above-ground appurtenances located within the public street right of way constitute an interference with the public governmental use of the right of way and are unattractive aesthetically and the appearance thereof detracts from and is at variance with the appearance of the neighborhoods within which they are located; and that in the interest of the public

health, safety and welfare, wherever possible said utilities should be placed underground. Where said utilities are placed underground, those premises receiving service from them should be adapted to the new underground service, thereby permitting the removal of such above-ground facilities. (Ord. 4342, 1983).

8.44.020 Underground adaptation required. Whenever the public electric utility serving property within the area described under section 8.44.030 hereof places its electric distribution lines underground, then and at that time the owner or occupant of each said property shall cause the electrical facilities and appurtenances upon and within each property to be so installed or modified as to be compatible with, and to permit the rendering of electric service through said underground electric distribution lines, so that poles, overhead wires and related above-ground appurtenances may be removed by said public electric utility from such area. (Ord. 4342, 1983).

8.44.030 Area affected. The area within which the provisions of section 8.44.020 hereof shall apply shall be as follows:

Bounded on the north by the Eau Claire River, on the south by the north line of East Lake Street, on the east by the west line of Barstow Street, and on the west by the Chippewa River. (Ord. 4342, 1983).

8.44.040 Penalty. Any person violating any of the provisions of this chapter shall, upon conviction thereof, forfeit not less than ten dollars nor more than one hundred dollars, together with the costs of prosecution, for each offense. For any violation existing longer than 30 days, the forfeiture for each day shall be not less than 50 dollars nor more than 200 dollars. In default of payment thereof, the violator shall be committed to the Eau Claire County Jail for a period not exceeding thirty days. Each day such violation continues shall constitute a separate offense. (Ord. 4342, 1983).

Title 9

PUBLIC PEACE, MORALS AND WELFARE

Chapters:

I. OFFENSES AGAINST OFFICERS AND GOVERNMENT

9.04 False Alarms
9.08 Enforcement
9.10 Private Alarm System

II. OFFENSES AGAINST THE PERSON

9.12 Assault and Battery
9.16 Fair Housing

III. OFFENSES AGAINST HEALTH AND SAFETY

9.20 Abandoned Refrigerators
9.24 Boating Regulations
9.28 Explosives
9.30 Hunting
9.32 Fireworks and Firearms
9.35 Occupancy
9.36 Nuisances
9.37 Possession of Marijuana

9.38 Smoking
9.39 Public Bridges

IV. OFFENSES AGAINST PUBLIC DECENCY

9.40 Cruelty to Animals--Exhibition
9.42 Obscene Materials and Performances
9.43 Exposing Minors to Harmful Materials
9.44 Gambling
9.48 Prostitution

V. OFFENSES AGAINST PUBLIC PEACE

9.50 Carrying Containers and Throwing Objects within Spectator Facilities
9.52 Public Intoxication
9.56 Disorderly Conduct
9.58 Block Party
9.59 Special Events
9.60 Marches and Public Assemblies

VI. OFFENSES AGAINST PROPERTY

9.61 Trespass
9.62 Retail Theft
9.63 Damage to Property
9.64 Fences
9.65 Graffiti
9.68 Injuring Property--Sidewalks
9.72 Bill Posting--Handbills
9.74 Camping
9.76 Parks--Public Grounds
9.77 Fraud on Residential Landlords
9.78 Obtaining Utility Service by Fraud
9.79 Taxicabs and Motor Buses

VII. CONSUMER PROTECTION

9.80 False Weights and Measures
9.82 Library Materials

VIII. OFFENSES BY OR AGAINST MINORS

9.84 Offenses

IX. MISCELLANEOUS PROVISIONS

9.88 Emergency Powers

I. OFFENSES AGAINST OFFICERS AND GOVERNMENT

Chapter 9.04

FALSE ALARMS

Sections:

9.04.010 False alarm--Prosecution.
9.04.020 False fire or police warning--Prosecution.
9.04.030 Enforcing penalty.
9.04.040 Charges for false alarms.

9.04.010 False alarm--Prosecution. Any person who willfully gives or makes a false alarm of fire, or who employs any bellman, or uses or causes to be sounded any bell, horn or bugle or other sounding instrument, or who employs any device, noise or performance tending in either case to the collection of persons on the streets, sidewalks or other public places, to the obstruction of the same, for any purpose whatsoever, shall be subject to a fine not exceeding twenty-five dollars besides the costs of prosecution. (Prior code §20.07).

9.04.020 False fire or police warning--Prosecution. No person shall willfully use or employ in the city any bell, whistle, horn, sounding instrument or alarm or any device, noise or performance tending to imitate or imitating any bell, whistle, horn, sounding instrument or alarm of any device, noise or performance, used by the police department or fire department of the city in the performance of the duties of such departments or either thereof, and any person violating the provisions of this section shall be subject to a fine not exceeding twenty-five dollars besides costs of prosecution. (Prior code §20.08).

9.04.030 Enforcing penalty. Any person in default of payment of forfeitures and costs of prosecution fixed in Sections 9.04.010 and 9.04.020, inclusive shall be imprisoned in the county jail of Eau Claire County for not more than thirty days. (Prior code §20.09(part)).

9.04.040 Charges for false alarms. A. "False alarm" means an alarm signal which elicits a response by the police when a situation requiring a response by the police does not in fact exist.

B. Any person having a burglar, hold-up or any type of intrusion alarm shall be charged a fee as stated in the City of Eau Claire Fees and Licenses Schedule for the number of false alarms responded to by the police department within a calendar year:

C. If the possessor of the alarm shows to the satisfaction of the chief of police that such false alarm was not the result of negligence or improper maintenance, or other good and sufficient cause beyond the reasonable control of the possessor of the alarm, such fee may be waived and the response shall not count as a false alarm in computing the fee established under subsection B. (Ord. 6363 §28, 2002; Ord. 6235, 2001; Ord. 4343, 1983).

Chapter 9.08

ENFORCEMENT

Sections:

9.08.010 Failure to enforce.
9.08.020 Refusal to assist officer.
9.08.030 Illegal premises--Right of entry.

9.08.010 Failure to enforce. If the chief of police or any police officer of the city neglects to perform any duty required by him by this title, he shall pay a fine of not less than three nor more than fifty dollars, together with costs of prosecution. (Prior code §20.04).

9.08.020 Refusal to assist officer. Any person who refuses to assist any officer in arresting any person for any offense under this title, whenever called upon by an officer for assistance, shall,

upon conviction thereof, pay a fine of not less than one nor more than twenty dollars, or if any person resists any officer, or counsels resistance to any officer in the discharge of his duties under this title, such person shall be subject to a like penalty. (Prior code §20.05).

9.08.030 Illegal premises--Right of entry. If the owner or keeper or any person within any gambling house or room, any disorderly house, or any house of ill fame within this city refuses to permit the city manager, any alderman, the chief of police or any policeman to enter the same, it shall be lawful for either of said officers to enter, or cause the same to be entered by force, by breaking the doors or otherwise and arrest with or without warrant the suspicious persons found therein. (Prior code §20.21).

Chapter 9.10

PRIVATE ALARM SYSTEMS

Sections:

9.10.010 Purpose.
9.10.020 Definitions.
9.10.030 Devices prohibited.
9.10.040 Private alarm systems.
9.10.050 Exception.
9.10.060 Penalty.

9.10.010 Purpose. The purpose of this chapter is to establish control of the various types of intrusion, holdup, fire extinguishment, smoke detection and other emergency signals from telephone or electronic devices that would require police or fire response, investigation and safeguarding of property at the location of an event reported by a signal which is transmitted by telephone or radio, or which is otherwise relayed to the emergency communications center by an alarm device requiring investigation or other action by any person acting in response to a signal actuated by an alarm device, including such devices already in use within the city. (Ord. 3849 (part), 1978).

9.10.020 Definitions. For the purpose of this chapter:

A. "Central alarm station" means any facility operated by a business that owns or leases a system of police or fire alarm devices, which facility is manned by operators who receive, record or validate alarm signals and relay information about such validated signals to the police department or fire department when appropriate.

B. "Emergency communications center" means the communications center located within the police department headquarters which handles the emergency phone calls and radio communications for the police and fire departments.

C. "Fire department" means the city fire headquarters and other locations housing privately or publicly owned equipment serving the fire department.

D. "Police department" means the city police headquarters and other locations housing privately or publicly owned equipment serving the police department.

E. "Premises or local alarm" means any alarm which produces an audible or visible signal designated to notify persons within audible or visual range of the signal.

F. "Private alarm system" means any system which, when actuated by an unlawful act, fire or other emergency requiring police or fire department response, transmits a prerecorded message or other signal by telephone, radio or other means to a central alarm station.

G. "Telephone or electronic device" means any device which is a telephone device or telephone attachment, that automatically or electronically selects a telephone line connected to a central alarm station. (Ord. 3849 (part), 1978).

9.10.030 Devices prohibited. A. No person shall use, or cause or permit to be used, any telephone or electronic device or attachment that automatically selects a public primary telephone

trunk line of the police department, fire department or emergency communications center and then reproduces any prerecorded message to report any unlawful act, fire or other emergency.

B. This section shall not apply to security systems required under government contract where no government-approved private alarm system, required under said contract, is readily available, in the judgment of the chief of police, to provide such a security system. The type and manner of direct connection of said system with the police department shall be subject to the review and approval of the chief of police. If, at any time after such direct connection to the police department, a government-approved private alarm system becomes available which can reasonably replace such direct connected system, the chief of police may require the disconnection of the system. (Ord. 4559, 1985; Ord. 3849 (part), 1978).

9.10.040 Private alarm systems. Any person owning, leasing or operating a private alarm system shall also monitor such service at all times during the hours that such a system is in operation and inform the emergency communications center of alarms transmitted to the central alarm station. (Ord. 3849 (part), 1978).

9.10.050 Exception. None of the provisions of this chapter shall apply to any official governmental body or subdivision thereof which owns, operates and maintains its own alarm equipment. (Ord. 3849 (part), 1978).

9.10.060 Penalty. Any person who violates any provision of this chapter shall be subject to forfeiture in an amount not exceeding two hundred fifty dollars for each offense. Each day during which a violation continues shall be deemed to be a separate offense. (Ord. 3849 (part), 1978).

II. OFFENSES AGAINST THE PERSON

Chapter 9.12

ASSAULT AND BATTERY

Sections:

9.12.010 Prohibited--Punishment.

9.12.010 Prohibited--Punishment. Any person who commits an assault and battery upon another within the limits of the city shall, upon conviction thereof, be punished by a fine not exceeding one hundred dollars nor less than one dollar, together with the costs of prosecution; and in default of payment of such fine and costs, shall be imprisoned in the county jail until said fine and costs are paid, but not to exceed three months. (Prior code §20.12).

Chapter 9.16

FAIR HOUSING

Sections:

9.16.010 State statutes and administrative code adopted.
9.16.020 Purpose.
9.16.050 Requiring references permitted.
9.16.060 Violation--Penalty.

9.16.010. State statutes and administrative code adopted. The provisions of Wisconsin Statute section 106.50, including all amendments, revisions, and re-numberings, as well as any

administrative rules adopted under section 106.50, are incorporated by reference and made a part of this section with full legal force and effect. (Repealed and recreated Ord. 7100, 2014)

9.16.020 Purpose. It is declared to be the policy of the city pursuant to the United States and Wisconsin Constitutions and also its power to protect the public health, safety, and general welfare, that all persons shall have an equal opportunity for housing consistent with Wisconsin's Open Housing Law contained in Wis. Stat. § 106.50. (Ord. 4247, 1982; Ord. 3634 (part), 1976; prior code §23.60(1)).

9.16.050 Requiring references permitted. Nothing in this chapter shall be deemed to prohibit an owner, or his agent, from requiring that any person who seeks to buy, rent or lease housing supply information concerning his family, marital, financial and business status but not covering race, color, physical condition, developmental disability, as defined in Wis. Stats. s. 51.01(c), or creed. (Repealed and recreated Ord. 7100, 2014; Ord. 4247 §6, 1982; prior code §23.60(5)).

9.16.060 Violation--Penalty. Any person who wilfully violates this chapter shall, for each such violation, forfeit not less than twenty-five dollars nor more than two hundred dollars. Each day such violation continues shall constitute a separate offense. Payment of any such forfeiture shall be stayed during the period in which any appeal may be taken and during the pendency of any appeal.

III. OFFENSES AGAINST HEALTH AND SAFETY

Chapter 9.20

ABANDONED REFRIGERATORS

Sections:

9.20.010 Doors and latches removed.
9.20.020 Violation--Penalty.

9.20.010 Doors and latches removed. A. No person, firm or corporation as the owner, lessee or manager shall abandon, discard, store or keep in any place or premises under his control, which is accessible to children, a refrigerator, icebox, freezer cabinet or other container of a capacity of one and one-half cubic feet or more, which is no longer used for refrigeration purposes, without the attached doors, lids, covers, hinges or latches removed.

B. The provisions of subsection A shall apply to the removal of said articles to any other place or premises for the purpose of dumping or discarding the same. (Prior code §20.46(a), (b)).

9.20.020 Violation--Penalty. Any person, firm or corporation violating provisions of Section 9.20.010 shall, upon conviction thereof, forfeit not more than one hundred dollars and costs of prosecution and upon failure to pay the same shall be confined to the county jail for not more than thirty days. (Prior code §20.46(c)).

Chapter 9.24

BOATING REGULATIONS

Sections:

9.24.010 Purpose.
9.24.020 Half Moon Lake -- Water skiing.
9.24.030 Half Moon Lake -- Motor boats.

9.24.040 Water ski exhibitions -- Permits.
9.24.050 Bulkhead lines.
9.24.060 Chippewa River -- Placement of buoys and markers.
9.24.070 Half Moon Lake -- Placement o f buoys.
9.24.080 Violations -- Penalties.
9.24.090 Severability.

9.24.010 Purpose. The city council is cognizant of the need to prescribe rules and regulations for the operation of motor-propelled boats on the waters within the corporate limits of the city, so as to provide safe and healthful conditions for the enjoyment of aquatic recreation consistent with public rights and interests, and the capability of the water resources. (Ord. 5744 §1, 1997).

9.24.020 Half Moon Lake - Water skiing. A. The city council declares that because of the relative narrowness of Half Moon Lake and because of the extensive and varied recreational uses made of the lake by great numbers of persons of all ages for swimming, wading, boating, canoeing, fishing, picnicking on the banks and the like, water skiing, aquaplaning, surf board riding, and similar activities performed by means of towing behind a motor-propelled boat, are detrimental to the public health and safety and are therefore prohibited on said lake as hereinafter set forth, except as hereinafter otherwise provided.

B. In the interests of public health and safety, no person shall operate a motor boat on any part of the waters of Half Moon Lake in the city while such boat is towing any person or persons on water ski or skis, aquaplane, surf board or similar device; nor shall any person engage in water skiing, surf board riding, aquaplaning or similar activity while being towed by a motor boat on any part of Half Moon Lake, except as hereinafter otherwise provided. (Ord. 5744 §1, 1997).

9.24.030 Half Moon Lake - Motor boats. A. No boats powered by an internal combustion engine shall be operated on Half Moon Lake without prior authorization from the city council or the director of community services or special events approved in accordance with Ch. 9.59. (Ord. 7202, 2016; Ord. 7161 §3, 2015; Ord. 6560, 2004; Ord. 5744 §1, 1997).

9.24.040 Water ski exhibitions–Permits. A. The city council may grant permits to persons or associations for the legitimate purpose of practicing for and presenting water ski exhibitions or races to the public. Permits shall be valid for three (3) years unless revoked by action of the city council before that time for violation of the terms of this chapter or any associated lease.

B. Permits granted by the city council shall designate the location, time, and activities allowed, and shall be at the site when any practice, exhibition, or race takes place, and further shall be available for inspection upon request by an appropriate state or local representative.

C. Permits granted hereunder shall serve as exemptions to the various limitations against water skiing and motorboat use as contained in ss. 30.61(2), 30.66, and 30.69(3)(a) to (c), Wis. Stats., and ss. 9.24.020, 9.24.030, and 9.24.060 of this chapter, as amended and renumbered. (Ord. 6525 §1, 2004; Ord. 5744 §1, 1997).

9.24.050 Bulkhead lines. Bulkhead lines for the Chippewa River shall be as follows:

Commencing at SE corner of Section 7; thence due west along the south line of Section 7 a distance of 441 feet; thence N. 26° W. a distance of 93 feet to the point of beginning, said point being a point on the shore of Dells Pond; thence S. 26° E. a distance of 93 feet, said line being 24 feet from and parallel to Building No. 11, Brown Company Paper Mill; thence S. 10° W. a distance of 52 feet; thence S. 26° a distance of 114 feet to a point on the shore of Dells Pond and there terminating, said line being 24 feet from and parallel to Building No. 11, Brown Company Paper Mill.

Whereas the city of Eau Claire, Eau Claire and Chippewa Counties, Wisconsin, by and through its city council, proposes to establish in the interest of the public and pursuant to Section 30.11, Wisconsin Statutes, a new bulkhead line along a part of the shore of Half Moon Lake, Eau Claire County, as hereinafter described, and does ordain as follows:

That the bulkhead line of that part of the south shore of Half Moon Lake, hereinafter described and more particularly shown by a map filed in the office of the city clerk of Eau Claire, the office of the register of deeds for Eau Claire County and the office of the Wisconsin Department of

Natural Resources, is established and determined as set forth in the following description and said map, subject to the approval of the Wisconsin Department of Natural Resources, namely:

Half Moon Lake Bulkhead Line located in the SW 1/4 of the SW 1/4, Section 19, Township 27 North, Range 9 West, and in the SE 1/4 of the SE 1/4 of Section 24, Township 27 North, Range 10 West, city of Eau Claire, Eau Claire County, Wisconsin, which are lying north and east of the following described line:

Commencing at the Southwest corner of said Section 19; thence N. 1°08' E. 100.10 feet to the north line of Menomonie Street; thence N. 79°25' E. along said north line of Menomonie Street 578.5 feet to the west line of Carson Park Drive; thence N. 5°10' W. along said west line of Carson Park Drive 336.8 feet; thence N. 0°20' W. 116.18 feet; thence S. 88°06' W. 49.17 feet to the point of beginning; thence N. 63°00' W. 193.00 feet; thence S. 83°49' W. 428.42 feet; thence N. 10°34' W. 50 feet to the terminus of said line. (Ord. 5744 §1, 1997; Ord. 3610, 1976; Ord. 3399 §1 (1) (part), 1973).

9.24.060 Chippewa River--Placement of buoys and markers. A. The intent of this section is to provide safe and healthful conditions for the enjoyment of aquatic recreation consistent with public needs and the capability of the water resource.

B. The provisions of this section shall apply to the waters of the Chippewa River within the jurisdiction of the city. The provisions of this section shall be enforced by those law enforcement officers having the authority and jurisdiction for such enforcement.

C. In addition to all other boating rules and regulations contained in the Wisconsin Statutes and this code, no person shall operate any boat or other watercraft contrary to any buoy which is legally placed within the waters referred to in subsection B hereof.

D. Buoys may be placed, in compliance with regulations of the Wisconsin Department of Natural Resources, within such waters as follows:

1. Attached to an eye bolt anchor located about two hundred feet upstream of the spillway on the northwest shore of the Chippewa River in the vicinity of Mead Street extended, thence five hundred fifty feet northeast across the river to an eye bolt anchor located about one hundred fifty feet upstream of the powerhouse on the opposite side of the river.

2. Attached to the eye bolt anchors beginning approximately 700 ft. upstream from the Riverview Park boat landing, continuing downstream along the channel to the boat landing. Buoys should be identified and located as follows:

Hazard marker at	Longitude 91°30'10" Latitude 44°50'49"
Hazard marker at	Longitude 91°30'09" Latitude 44°50'49"
Slow - no wake marker at	Longitude 91°30'10" Latitude 44°50'48"
Channel marker at	Longitude 91°30'10" Latitude 44°50'48"
Slow - no wake marker at	Longitude 91°30'10" Latitude 44°50'46"
Hazard marker at	Longitude 91°30'09" Latitude 44°50'46"
Hazard marker at	Longitude 91°30'10" Latitude 44°50'45"
Channel marker at	Longitude 91°30'08" Latitude 44°50'48"
Channel marker at	Longitude 91°30'06" Latitude 44°50'47"
Slow - no wake marker at	Longitude 91°30'03" Latitude 44°50'46"

3. Attached to eye bolt anchors beginning approximately 400 ft. downstream from the Riverview Park boat landing and continuing downstream along the channel to the boat landing. Buoys shall be identified and located as follows:

Slow - no wake marker at	Longitude 91°31'00" Latitude 44°50'45"

Channel marker at	Longitude 91°30'00" Latitude 44°50'45"
Slow - no wake marker at	Longitude 91°30'00" Latitude 44°50'44"
Hazard marker at	Longitude 91°30'00" Latitude 44°50'44"
Hazard marker at	Longitude 91°30'00" Latitude 44°50'45"
Channel marker at	Longitude 91°30'01" Latitude 44°50'45"

E. No person shall, without authority, remove, damage, destroy, or moor or attach any watercraft to any buoy, beacon or marker placed in the waters of the Chippewa River by the authority of the United States, state, county or city, or by any private person pursuant to the provisions of this section. (Ord. 6571, 2005; Ord. 6525 §2, 2004; Ord. 5744 §1, 1997; Ord. 4931, 1989; Ord. 3643, 1976, Ord. 3618, 1976).

9.24.070 Half Moon Lake--Placement of buoys. A. The intent of this section is to provide safe and healthful conditions for the enjoyment of aquatic recreation consistent with public needs and the capability of the water resource. Additionally, this section is intended to designate a defined area to allow water ski exhibitions to take place and at the same time allow other users of the lake to access and enjoy the other sections of the lake.

B. The provisions of this section shall apply to the waters of Half Moon Lake within the jurisdiction of the city. The provisions of this section shall be enforced by those law enforcement officers having the authority and jurisdiction for such enforcement.

C. In addition to all other boating rules and regulations contained in the Wisconsin Statutes and this code, no person shall operate any boat or other watercraft not associated with water ski exhibitions within the area defined by buoys which are legally placed within the waters referred to in subsection B. hereof during the time period water ski exhibitions are taking place. Such time shall be posted at all boat landings.

D. Buoys may be placed in compliance with regulations of the Wisconsin Department of Natural Resources within such waters as follows:

Attached to an eye bolt anchor and located as follows:

Marker buoy at	Latitude 44°48'34.41" Longitude 91°30'55.02"
Marker buoy at	Latitude 44°48'47.41" Longitude 91°31'14.76"

E. A water ski jump may be placed in compliance with regulations of the Wisconsin Department of Natural Resources within such waters as follows:

Attached to an eye bolt anchor and located as follows:

Ski jump at	Latitude 44°48'48.77" Longitude 91°30'57.56"

(Ord. 5744 §1, 1997).

9.24.080 Violations--Penalties. Wisconsin state boating penalties as found in s. 30.80, Wis. Stats., and deposits as established in the uniform deposit and bail schedule established by the Wisconsin judicial conference are hereby adopted by reference, with all references to fines amended to forfeitures and all references to imprisonment deleted. Any person, firm, or corporation violating provisions of this chapter for which fines are not provided in s. 30.80, Wis. Stats., shall, upon conviction thereof, forfeit not more than two hundred dollars and costs of prosecution, and upon failure to pay the same, be confined to the county jail for not more than thirty days. (Ord. 6525 §3, 2004; Ord. 5744 §1, 1997; Ord. 4072 §2, 1980).

9.24.090 Severability. The provisions of this chapter shall be deemed severable and it is expressly declared that the city council would have passed the other provisions of this chapter irrespective of whether or not one or more provisions may be declared invalid. If any provision of this chapter or the application to any person or circumstance is held invalid, the remainder of the chapter

and the application of such provisions to other persons or circumstances shall not be affected. (Ord. 5744 §1, 1997).

Chapter 9.28

EXPLOSIVES

Sections:

9.28.010 Permit required.
9.28.020 Violation--Penalty.

9.28.010 Permit required. No person, firm, association or corporation, or any agent, servant or employee of any person, firm, association or corporation, shall keep for use, storage or sale, or deal in any bulk gunpowder, blasting powder, dynamite, nitroglycerine, gasoline, benzine or denatured alcohol or any other explosive, combustible or inflammable substances of a like or similar nature, in any quantity in any building, structure or place within the city without first having obtained a written permit therefor from the chief of the fire department of the city, designating the building, structure or place where and specifying the quantity and prescribing the conditions and terms upon which the same shall be permitted to be kept, stored or handled within the city. (Prior code §15.8).

9.28.020 Violation--Penalty. Any person, firm, association or corporation, or any agent, servant or employee of any person, firm, association or corporation violating any of the provisions contained in such permit shall be punished by a fine of not less than five dollars, nor more than twenty-five dollars, besides the costs of the prosecution, and in default of payment thereof, by imprisonment in the county jail for not more than thirty days, unless the fine and costs are sooner paid. (Prior code §15.88).

Chapter 9.30

HUNTING

Sections:

9.30.010 Definitions.
9.30.020 Hunting on city property.
9.30.030 Penalty.

9.30.010 Definitions. In this chapter, the following terms shall mean:

A. "Hunt" or "hunting" means the pursuing, taking, catching or killing of any wild animal or animals.

B. "City property" means any property which is owned or leased by the city of Eau Claire including property in which the city of Eau Claire is a land contract vendee and all municipal easements. (Ord. 5549, 1995).

9.30.020 Hunting on city property. No person shall hunt or engage or assist in hunting on any city property except for fishing in designated areas. (Ord. 6545 §1, 2004; Ord. 5549, 1995).

9.30.030 Penalty. Any person violating any provision of this chapter shall, upon conviction, be subject to a forfeiture of not less than $100 nor more than $500 for each offense, and upon failure to pay the same shall be confined in the county jail for not more than 30 days. (Ord. 5549, 1995).

Chapter 9.32

FIREWORKS AND FIREARMS

Sections:

9.32.010 Definition.
9.32.020 Prohibited.
9.32.022 Pyrotechnic composition device vendor permit.
9.32.023 Permit fee--Conditions--Term.
9.32.024 Sale to minors.
9.32.025 Discharging fireworks.
9.32.030 Discharging firearms.
9.32.040 Firearms restricted in certain buildings.
9.32.050 Violation--Penalty.

9.32.010 Definition. In this section, "fireworks" means anything manufactured, processed or packaged for exploding, emitting sparks or combustion which does not have another common use, but does not include any of the following:

A. Fuel or a lubricant;

B. A firearm cartridge or shotgun shell;

C. A flare used or possessed or sold for use as a signal in an emergency or in the operation of a railway, aircraft, watercraft or motor vehicle;

D. A match, cigarette lighter, stove, furnace, candle, lantern or space heater;

E. A cap containing not more than one-quarter grain of explosive mixture, if the cap is used or possessed or sold for use in a device which prevents direct bodily contact with a cap when it is in place for explosion;

F. A toy snake which contains no mercury;

G. A model rocket engine;

H. Tobacco and a tobacco product;

I. A sparkler on a wire or wood stick not exceeding 36 inches in length or 0.25 inch in outside diameter which does not contain magnesium, chlorate or perchlorate;

J. A device designed to spray out paper confetti or streamers and which contains less than one-quarter grain of explosive mixture;

K. A device designed to produce an audible sound but not explode, spark, move or emit an external flame after ignition and which does not exceed 3 grams in total weight;

L. A device that emits smoke with no external flame and does not leave the ground;

M. A cylindrical fountain not exceeding 100 grams in total weight with an inside tube diameter not exceeding 0.75 inch, designed to sit on the ground and emit only sparks and smoke;

N. A cone fountain not exceeding 75 grams in total weight, designed to sit on the ground and emit only sparks and smoke. (Ord. 4738 §2, 1987; prior code §20.38[a]).

9.32.020 Prohibited. No person may possess, sell or use fireworks within the city. However, nothing in this section shall be construed to prohibit the city manager or city council from authorizing pyrotechnic displays of fireworks in parks and other public places, whenever so authorized by resolution of the council or the director of community services or special events permit approved in accordance with Ch. 9.59. Further, nothing in this section shall be construed to prohibit the lawful possession, custody or control of the above-named articles by wholesale dealers when held in transit, or for sale or delivery to places for lawful pyrotechnic displays. (Ord. 7202, 2016; Ord. 7161 §4, 2015; Ord. 4738 §2, 1987).

9.32.022 Pyrotechnic composition device vendor permit. A. It shall be unlawful for any person, firm or corporation to sell any of the devices described in s. 9.32.010 F., I., J., K., L., M., and N., without first obtaining a permit from the city clerk. (Ord. 5414 §1, 1994).

9.32.023 Permit fee--Conditions--Term. A. The annual fee for a permit to sell pyrotechnic composition devices under s. 9.32.022 is as stated in the City of Eau Claire Fees and Licenses Schedule. The entire permit fee shall be charged for every license for the whole or fraction of a year, and shall be paid when application is made for such permit.

B. The city clerk shall provide appropriate permit forms, as approved by the fire department, and shall maintain adequate record of the issuance thereof.

C. The applicant shall particularly describe the location where the permit will be used and shall at all times publicly and continuously display such permit at such location. Such permit may be transferred to a new location upon payment of a transfer fee as stated in the City of Eau Claire Fees and Licenses Schedule.

D. All vendors shall comply with all local ordinances and federal and state regulations and statutes regarding the sale, transport or storage of flammable, explosive or hazardous materials. (Ord. 6363 §29, 2002; Ord. 6236, 2001; Ord. 5414 §2, 1994).

9.32.024 Sale to minors. It shall be unlawful for any person, firm or corporation to sell any type of pyrotechnic composition device, as described in section 9.32.010, subsections F, G, I, J, L, M, and N, to any minor under the age of 18 years. (Ord. 6691, 2006; Ord. 5437, 1994).

9.32.025 Discharging fireworks. No person shall discharge any fireworks within the city unless permitted under section 9.32.020. (Ord. 4738 §3, 1987).

9.32.030 Discharging firearms. A. For the purpose of this chapter, "firearms" means any rifle, shotgun, handgun, spring gun, pellet gun, air gun, bow and arrow device, crossbow, or any other weapon from which a shot is discharged by an explosive or propellant.

B. It is unlawful for any person to fire or discharge any type of firearm in the city. This section shall not apply to the following:

1. Law enforcement officers when acting in the normal course of their employment;

2. Any bona fide safety training course or practice firing held at a location approved by the chief of police or that person's designee, or other governmental agency;

3. Bow hunting of animals provided that such bow hunting is expressly permitted by state law and otherwise consistent with state hunting regulations, and that the proposed hunt is consistent with the requirements of this ordinance:

a. Bow hunting must meet~~s~~ all of the following hunting conditions:

i. It shall be unlawful for a person to discharge a bow and arrow or crossbow within a distance of fifty (50) yards from a building located on another person's land. This restriction shall not apply if the person who owns the land on which the building is located allows and gives written permission to the person to use or discharge an arrow or crossbow within the specified distance of the building.

ii. Hunting may not occur across or within any public right of way or within fifty (50) feet of the center of a right of way and never closer than thirty (30) feet of the nearest border of a right-of-way.

iii. A bow and arrow or crossbow must be discharged toward the ground.

b. Bow hunting must meet all of the following public health, safety and welfare conditions:

i. Arrows or other projectiles shall not enter, occupy, or traverse land owned or occupied by another without the owner's prior written consent even if otherwise used in conformance with this section.

ii. No wildlife bait or feed such as deer bait, corn, seed, or other similar items designed to attract deer may be utilized or present on the permitted property during the hunting season.

iii. Bow and arrows or crossbows may not be discharged on or across any portion of land owned or occupied by the City of Eau Claire. This section shall not apply to practice or match shoots of regular clubs or other persons who have received prior written permission from the City of Eau Claire chief of police or the chief of police's designee.

iv. Bow hunters must follow state hunting laws, Wisconsin DNR hunting regulations, and safe hunting practices such as ensuring no people or property are in the vicinity of the target and the area beyond the target before discharge of an arrow or bolt.

v. Bow hunters must use best efforts to promptly dispatch a deer on the permitted property with a safe and effective shot. If a wounded deer is not recovered on the hunter or co-applicant's property, then entry on to another's property is permitted only with the prior permission of the landowner.

vi. Bow hunters shall take all reasonable steps to immediately and properly dispose of any portion of an animal killed or injured during a bow hunt including immediately field dressing any animal killed or injured at the site of the bow hunt, and promptly processing the meat and disposing of the by-products from the hunt.

4. When it has been determined by the director of community services that such hunting is necessary for proper game management or to protect parks or other property.

5. Spearing carp or other rough fish by bow and arrow in any waters except Half Moon Lake, pursuant to NR 20.09, 20.20, and any other applicable Department of Natural Resources regulation.

6. The chief of police or that person's designee may also authorize other firing or discharge of firearms in the city under special circumstances, provided that it has been established that such conduct will not jeopardize the safety or welfare of the public. The decision of the chief of police shall be final. (Ord. 7202, 2016; Ord. 7152 §2 2015; Ord. 7139, 2015-Denied; Ord. 7101, 2014; Ord. 6545 §2, 2004; Ord 5266 §2, 1992; Ord. 4777, 1987; Ord. 4738 §1, 1987; Ord. 4488 §1, 1984; Ord. 4420 §1, 1984; Ord. 4327 §3, 1983; Ord. 4065 §3, 1980).

9.32.040 Firearms restricted in certain buildings. A. Definitions. The following definitions shall apply in the interpretation and the enforcement of this chapter:

1. "Firearm" means a weapon that acts by force of gunpowder.

2. "Law enforcement" means any person employed by the State of Wisconsin or any political subdivision of this state, for the purpose of detecting and preventing crime and enforcing laws or ordinances and who is authorized to make arrests for violations of the laws or ordinances he or she is employed to enforce.

3. "Weapon" means a handgun, an electronic weapon as defined at Wis. Stats. §941.295, a knife or a billy club.

4. "Controlled-access facility" means a facility or area that has designated entrances for ingress and egress controlled by a door, gate, attendant or other means to limit entry while the facility is open and can be locked or secured when closed, or in the instance of temporary events of less than three weeks, designated entrances may be either secured when closed or the controlled-access facility removed at the termination of the temporary event.

B. In addition to the provisions of Wisconsin Statutes enumerating places where the carrying of a weapon or a firearm is prohibited, including exceptions thereto, it shall be unlawful for any person other than a law enforcement officer or other City officer or official designated by the Eau Claire Chief of Police to enter the following City of Eau Claire municipal buildings, facilities or locations while carrying a weapon or a firearm:

1. City Hall;
2. L.E. Phillips Memorial Public Library;
3. Fire Stations;
4. Police Station;
5. Fairfax Park Pool;
6. Carson Park football, softball, and baseball stadiums and facilities;
7. Chippewa Valley Museum and related buildings within Carson Park;
8. Paul Bunyan Museum and related buildings within Carson Park;
9. Streets Maintenance, Transit, and Recreation and related buildings along Forest Street;
10. City wells, pump houses, and all related buildings;
11. Hobbs Ice Center and all-season enclosed shelters at neighborhood parks;
12. Transit transfer station;

13. Park Tower and Owen Rust Memorial Apartments, and such other buildings or facilities as designated by the Housing Authority;

14. Wastewater treatment plant, lift stations, and related buildings; and

15. Any and all other municipal buildings or controlled-access facilities owned or operated by the City of Eau Claire, whether now in existence or later constructed or leased excepting Phoenix Park trailhead, restrooms, and Farmer's Market pavilion, Owen Band Shell, park pavilions in Carson Park and other similar open-sided structures in various locations.

C. It shall be unlawful for any person other than a law enforcement officer to enter any building, facility, or location open to the public that is posted as a no firearms or concealed weapons location while possessing, carrying, or concealing a firearm or weapon, whether with or without a state permit.

D. Signs meeting the requirements of Wis. Stats. § 943.13(2)(bm)1 shall be posted in prominent places near public entrances of all buildings, structures or locations that restrict or prohibit firearms or concealed weapons.

E. 1. Signs of at least 5 inches by 7 inches in size shall be posted in prominent places near public entrances to all licensed premises selling alcohol for on-premise consumption to advise patrons that:

a. Firearms are prohibited on such premises except with a valid concealed weapons permit pursuant to Wis. Stats. § 941.237(2);

b. Those with such a permit cannot be served alcohol if carrying a concealed weapon pursuant to Wis. Stats. § 941.237(3)(cx).

2. Licensees that prohibit all firearms and concealed weapons on the premise and post signs complying with sub D. above shall be exempt from this requirement.

3. The City Clerk shall have signs meeting these requirements produced and available for licensees by November 1, 2011, and for new licensees thereafter. Licensees shall post such signs or signs substantially similar of comparable size, font, and content.

F. Any person violating any of the provisions of this Section shall, upon conviction thereof, forfeit not less than $100 nor more than $500, plus court and other costs, for each separate violation, and shall further be subject to penalty for trespass under § 943.13 Wis. Stats. (Ord. 7192, 2016; Ord. 6984, 2011; Ord. 4921, 1989; Ord. 4738 §1, 1987; Ord. 4488 §2, 1984; Ord. 4420 §2, 1984; Ord. 4327 §4, 1983).

9.32.050 Violation--Penalty. Any person violating any of the provisions of this chapter shall, upon conviction thereof, forfeit not less than one dollar nor more than two hundred dollars together with costs of prosecution, and upon failure to pay the same shall be confined in the county jail for not more than thirty days. (Ord. 4738 §1, 1987; Ord. 4327 §5, 1983; prior code §20.39).

Chapter 9.35

OCCUPANCY

Sections:

9.35.010 Occupancy requirements.
9.35.020 Unlawful to overpopulate buildings.
9.35.030 Unlawful use of placard.
9.35.040 Enforcement.
9.35.050 Violation--Penalty.

9.35.010 Occupancy requirements. A. The occupancy limit determined by the city of Eau Claire inspections division shall be the maximum number of people allowed in a building or structure, or part thereof. Said occupancy limit shall be indicated on a placard approved by the city of Eau Claire, and the placard shall be posted per the order of the building inspector.

B. Building or structure, or part thereof, shall be defined as assembly hall under Wisconsin Administrative Code chapters Comm 54.001 and 55.01 Wisconsin Enrolled Commercial Building

Code section 303.1.

C. Occupancy limits are governed under this code sections 16.04.040 and 16.32.010. (Ord. 6670, 2006).

9.35.020 Unlawful to overpopulate buildings. It shall be unlawful for any person, firm, or corporation having possession, charge, or ownership of a building or structure, or part thereof, to permit in any building or structure, or part thereof, a greater number of persons than that indicated on the placard required to be posted pursuant to section 9.35.010 A. above as established by the city of Eau Claire inspection division. (Ord. 6670, 2006).

9.35.030 Unlawful use of placard. It shall be unlawful to fail to post, alter, deface, obstruct from view, or remove a placard required pursuant to section 9.35.010 A. above. (Ord. 6670, 2006).

9.35.040 Enforcement. A. Employees of the city of Eau Claire inspections division, the city of Eau Claire police department, or the city of Eau Claire fire department are authorized to issue citations for violation of this chapter.

B. If it is determined that the overpopulation of a building or structure, or part thereof, poses an immediate danger to the public health or safety, an employee of the city of Eau Claire inspections division, the city of Eau Claire police department, or the city of Eau Claire fire department shall, without notice or hearing, order the owner or agent of the property to correct the violation by complying with the occupancy limit, or by evacuating the occupants of said building or structure, or part thereof. (Ord. 6670, 2006).

9.35.050 Violation--Penalty. Any person, firm, or corporation having possession, charge or ownership of a building or structure, or part thereof, violating the provisions of this chapter shall be subject to a forfeiture of not less than $100 nor more than $500 dollars, plus costs, for each separate violation. Each person exceeding the occupancy limit shall be considered a separate violation. Each day of violation shall constitute a separate offense. (Ord. 6670, 2006).

Chapter 9.36

PUBLIC NUISANCES

Sections:

9.36.010 Allowing unlawful.
9.36.015. Community Nuisance.
9.36.020 Violation--Penalty.

9.36.010 Allowing unlawful. A. No person shall erect, contrive, cause, continue, maintain or permit to exist any public nuisance in the city.

B. A public nuisance shall be defined as any thing, act, use or condition of a building or land that interferes substantially with the comfortable enjoyment of life, health or safety of another person or the public. Public nuisances shall include, but not be limited to:

1. Any use that causes the air or environment to become noxious or offensive.
2. Any use that unduly promotes the breeding of flies, mosquitoes, or other insects.
3. Any use that unduly promotes a harborage or breeding place for rodents or other animals.
4. The accumulation or deposit of refuse, trash, wood products, furniture, metal items, junk, construction materials or other materials to such an extent as to cause blight. However, nothing in this chapter shall prohibit reasonable storage of construction materials during the construction of any structure.
5. All junked, disassembled, inoperable or wrecked motor vehicles, or parts thereof, which have been allowed to remain outside of any building upon public or private property for a period in excess of seven days, unless located in a zoning district where such use is permitted.

6. All trees, hedges, poster boards or other obstructions that prevent persons driving vehicles on public streets, alleys or highways from obtaining a clear view of traffic when approaching an intersection or pedestrian crosswalk. All trees, hedges, shrubbery or branches that obstruct or impede pedestrian or other lawful traffic on sidewalks.

7. All signs, billboards, awnings, and similar structures over or near streets, sidewalks or public places situated or constructed in a manner that endangers the public safety.

8. All buildings or structures erected, repaired, or altered within the city in violation of city ordinances relating to materials and manner of construction of such buildings or structures.

9. Repeated or continuous violations of this code.

10. Disorderly conduct as specified in s. 9.56.010, noises disturbing the public peace as specified in s. 9.56.070, and loud parties and gatherings as specified in s. 9.56.075 of this code.

C. Abatement of public nuisances. 1. If it is determined that a public nuisance exists that poses an immediate danger to the public health or safety, an employee of the Eau Claire city-county health department or appropriate city department shall, without notice or hearing, order the owner or occupant of the property to remove or abate the nuisance within such time determined to be reasonable under the circumstances. If the owner or occupant cannot be contacted, such orders may be posted in a visible location on the property involved. If such owner or occupant fails or refuses to comply with such order, the employee shall order the removal or abatement of the nuisance and the cost thereof shall be charged to the property and shall be entered on the next tax roll as a special tax on the property. Such costs shall be in addition to any other enforcement actions taken under this code.

2. If it is determined that a public nuisance exists that does not pose an immediate danger to the public health or safety, an employee of the Eau Claire city-county health department or appropriate city department shall serve an order upon the owner or occupant of the property to remove or abate the nuisance within such time determined to be reasonable under the circumstances. If the owner or occupant cannot be served after reasonable attempt, such orders may be posted in a visible location on the property involved. The order shall also notify the owner or occupant that any person aggrieved shall, within 15 days of the service or posting of the order, apply to the circuit court for an order restraining the city and the inspecting employee from entering on the premises and abating or removing the nuisance, or be forever barred. The court shall determine the reasonableness of the order for the abatement of the nuisance. If such owner or occupant fails or refuses to comply with such order and fails to restrain the city and the inspecting employee, the employee shall order the removal or abatement of the nuisance and the cost thereof shall be charged to the property and shall be entered on the next tax roll as a special tax on the property. Such costs shall be in addition to any other enforcement actions taken under this code.

D. Other methods not excluded. The abatement and penalty provisions of this chapter are not exclusive and may be used in combination with each other or with any other section of this code or state statute applicable to this subject matter. (Ord. 6853 §2, 2008; Ord. 6274, 2002; Ord. 6254 §1, 2002; Prior code §20.36).

9.36.015. Community Nuisance. A. Purpose. The City Council finds that excessive consumption of alcohol commonly produces a secondary effect of community nuisance. This section is created to limit and reduce this secondary effect.

B. Community nuisance. It is unlawful for any owner or occupant to:

1. cause or permit to remain upon her or his yard, front drive, porch or other area visible to the public from the right-of-way an accumulation of cans, bottles, cups or similar containers or other refuse not properly disposed of in refuse or recycling containers; or

2. cause or permit to remain for greater than 24 hours upon the exterior of her or his residence, which shall include but not be limited to front lawns, drives, fire escapes and rooftops, any interior chairs or tables, game tables, or other items not for outdoor use. (Ord. 7297 §2, 2018).

9.36.020 Violation--Penalty. Any person or corporation violating the provisions of Section 9.36.010 or Section 9.36.015 shall upon conviction be fined a sum of not less than five dollars, and not more than three hundred dollars, with the costs of prosecution. (Ord. 7297 §4, 2018; Ord. 6254 §2, 2002; prior code §20.37).

Chapter 9.37

POSSESSION OF MARIJUANA

Sections:

9.37.010 Possession.
9.37.020 Penalties.

9.37.010 Possession. Pursuant to the provisions of s. 66.0107(1)(bm), Wis. Stats, as amended from time to time, the possession of 25 grams or less of marijuana, as defined in s. 961.01(14), Wis. Stats, and subject to the exceptions in the introduction of s. 961.41(3g), is prohibited and shall be punishable as a violation of this chapter, except that any person charged with possession of more than 25 grams of marijuana, or who is previously or currently charged with possession of any amount of marijuana in the state of Wisconsin, shall not be charged under this paragraph. (Ord. 6303, 2002).

9.37.020 Penalties. Any adult person violating this ordinance shall be subject to a forfeiture of $1.00, exclusive of costs. (Ord. 7308 §1, 2018; Ord. 6303, 2002).

Chapter 9.375

SYNTHETIC CANNABINOID PROHIBITED

Sections:

9.375.010 Possession, use, and sale are illegal.
9.375.020 Medical or dental use allowed.
9.375.030 Penalties.

9.375.010 Possession, use, and sale are illegal. It shall be illegal for any person to use, possess, purchase, attempt to purchase, sell, publically display for sale or attempt to sell, give, or barter any one or more of the following chemicals whether under the common street or trade names of “Spice”, “K2”, “Genie”, “Yucatan Fire”, “fake” or “new” marijuana, or by any other name, label, or description:

A. Salviadivinorum or salvinorum A; all parts of the plant presently classified botanically as salvia divinorum, whether growing or not, the seeds thereof; any extract from any part of such plant, and every compound, manufacture, salts derivative, mixture or preparation of such plant, its seeds or extracts;

B. (6aR, 10aR)-9-(hydroxymethyl)-6, 6dimethyl-3-(2methyloctan-2-yl)-6a, 7, 10, 10a-tetrahydrobenzo[c]chromen-1-ol some trade or other names: HU-210;

C. 1-Pentyl-3-(1-naphthoyl) indole-some trade or other names: JWH-018\spice;

D. 1-Butyl-3-(1naphthoyl) indole-some trade or other names: JWH-073;

E. 1-(3{trifluoromethylphenyl}) piperazine-some trade or other names: TFMPP;

F. or any similar structural analogs.

9.375.020 Medical or dental use allowed. Acts otherwise prohibited under s. 9.375.010 shall not be unlawful if done by or under the direction or prescription of a licensed physician, dentist, or other medical health professional authorized to direct or prescribe such acts, provided that such use is permitted under state and federal laws.

9.375.030 Penalties. Any adult person violating this ordinance shall be subject to a forfeiture of not less than $100.00 nor more than $500.00, exclusive of costs, and upon failure to pay the same shall be confined in the county jail for not more than 30 days. (Ord. 6933 §1, 2010)

Chapter 9.38

SMOKING

Sections:

9.38.010 Smoking prohibited.
9.38.012 City buildings.
9.38.015 Public school grounds and premises.
9.38.017 Restrictions on sale or gift of cigarettes or tobacco products.
9.38.020 Violation--Penalty.

9.38.010 Smoking prohibited. No person shall light a match or other flame-producing device, or smoke, use or inhale any substance produced by a tobacco substitute such as a nicotine containing inhalant, or carry a lighted cigar, cigarette or pipe, or use an electronic smoking device in any of the following places:

A. A city transit bus owned and operated under the auspices of the city. Any person engaging in any of such activities may be refused admittance to said bus or may be required to leave such bus by the person in charge at the time, or his agent, without reimbursement for any fee or charge which may have been paid for admittance to said bus;

B. The Hobbs Municipal Ice Center. Any person engaging in any of such activities may be refused admittance to the Ice Center or may be required to leave the Ice Center by the person in charge at the time, or his agent, without reimbursement for any fee or charge which may have been paid for admittance to the Ice Center;

C. Any public bus shelter of the city, whether or not such shelter is located on public or private property. (Ord. 7386, §3, 2020; Ord. 7094, §1, 2014; Ord. 3597 (part), 1976).

9.38.012 City buildings. A. No person shall smoke, use or inhale any substance produced by a tobacco substitute such as a nicotine containing inhalant or carry any lighted cigar, cigarette, pipe or any other lighted smoking equipment, including an electronic smoking device, in any enclosed, indoor areas in city buildings. (Ord. 7386, §3, 2020; Ord. 7094, §2, 2014)

9.38.015 Public school grounds and premises. It shall be unlawful for any person to commit the following acts on premises owned or rented by, or under the control of, a school board:

A. Smoke, use or inhale any substance produced by a tobacco substitute such as a nicotine containing inhalant or possess a lighted cigar, cigarette, pipe or any other instrument with which to smoke tobacco; or

B. Place any tobacco product in one's mouth; or

C. Use any electronic smoking device.

D. The prohibitions detailed in this section shall not apply to areas exempted by school officials. (Ord. 7386, §3, 2020; Ord. 7094, §3, 2014; Ord. 5510, 1995; Ord. 5044 §1, 1990).

9.38.017 Restrictions on sale or gift of cigarettes or tobacco products. Section 134.66 of the Wisconsin Statutes is adopted by reference and made a part of this chapter as if fully set forth herein. (Ord. 5289 §1, 1992).

9.38.020 Violation--Penalty. Any person violating any of the provisions of Section 9.38.010 shall, upon conviction thereof, forfeit not more than 500 dollars and not less than sixty (60) dollars together with the costs of prosecution for each offense. (Ord. 7386, §3, 2020; Ord. 5044 §2, 1990; Ord. 4072 §3, 1980; Ord. 3579 (part), 1976).

Chapter 9.39

PUBLIC BRIDGES

Sections:

9.39.010 Jumping or diving prohibited.
9.39.020 Penalty.

9.39.010 Jumping or diving prohibited. No person shall jump or dive from any public bridge in the city. The city council may grant exceptions to such prohibition and, in special cases, can permit such jumping or diving. (Ord. 4949, 1989).

9.39.020 Penalty. Any person who violates any provision of this chapter shall forfeit not exceeding $500 for each offense, together with the costs of prosecution. In default of the payment of such forfeiture and costs, such person shall be confined in the county jail for a term not exceeding 30 days. (Ord. 4949, 1989).

IV. OFFENSES AGAINST PUBLIC DECENCY

Chapter 9.40

CRUELTY TO ANIMALS--EXHIBITION

Sections:

9.40.010 Cruelty--Prohibited.
9.40.020 Indecent exhibition.
9.40.030 Enforcing penalty.

9.40.010 Cruelty--Prohibited. No person shall inhumanely, unnecessarily, or cruelly beat, injure, or otherwise abuse any dumb animal, within the limits of the city. Any person who violates this section shall forfeit not less than five dollars nor more than twenty-five dollars for each offense and, in default of payment thereof shall be committed to the county jail. (Ord. 4072 §4, 1980; prior code §12.09).

9.40.020 Indecent exhibition. No person or persons shall indecently exhibit any bull, jack or stallion, or let any such jack or horse to any mare, or any bull to any cow within the limits of this city, unless in some enclosed place out of public view, and at such distance from any private residence as not to be offensive. Any person or persons guilty of so exhibiting any bull, jack or stallion, or letting any such jack or stallion to any mare, or any such bull to any cow, unless as aforesaid, shall on conviction, be fined in a sum not less than five dollars, nor more than twenty-five dollars and the costs of prosecution for each and every offense. (Prior code §20.17).

9.40.030 Enforcing penalty. In all cases of conviction for the violation of any of the provisions of Section 9.40.020, if the defendant neglects or refuses to pay the fine and costs imposed, the court shall enter a judgment that the defendant be imprisoned in the county jail for a term not exceeding three months, unless said fine and costs and expenses of prosecution are sooner paid. (Prior code §20.29(part)).

Chapter 9.42

OBSCENE MATERIALS AND PERFORMANCES

Sections:

9.42.010 Definitions.
9.42.020 Prohibition.
9.42.030 Penalty.

9.42.010 Definitions. In this chapter, the following words shall mean:

A. "Material" means any printed matter, visual representation, or sound recording, and includes but is not limited to books, magazines, motion picture films, videotapes, pamphlets, newspapers, pictures, photographs, drawings, sculptures and tape or wire recordings.

B. "Obscene." Any material or performance is "obscene" if:

1. The average person, applying contemporary community standards would find the matter appeals to the prurient interest if taken as a whole;

2. The matter, under contemporary community standards, describes or shows sexual conduct in a patently offensive way; and

3. The matter lacks serious literary, artistic, political or scientific value as measured by objective standards if taken as a whole.

C. "Performance" means any play, motion picture film, dance or other exhibition performed before an audience.

D. "Sexual conduct" means the commission or simulation of any of the following: sexual intercourse, sodomy, bestiality, necrophilia, human excretion, masturbation, sadism, masochism, fellatio, cunnilingus or lewd exhibition of the human genitals. (Ord. 4752, 1987).

9.42.020 Prohibition. No person shall, with knowledge of the character and content of the material or performance:

A. Commercially print, advertise, sell, publish, exhibit or transfer any obscene material;

B. Have in his or her possession, for purpose of sale, any obscene material;

C. Advertise, produce, admit persons to, or perform in any obscene performance;

D. Require a retailer, wholesaler or distributor, as a condition to the purchase of other goods, accept obscene material. (Ord. 4752, 1987).

9.42.030 Penalty. A. Any person who violates this ordinance shall, upon conviction thereof, forfeit not less than $200.00 nor more than $1,000.00, together with the costs of prosecution, and in default of payment of such forfeiture and cost of prosecution, shall be imprisoned in the county jail until such forfeiture and costs are paid, but not exceeding 90 days.

B. Any person found guilty or violating this ordinance who has previously been convicted of violating this ordinance within any 365 day period, shall, upon conviction thereof, forfeit not less than $500.00 nor more than $2,000.00 for each such offense, together with the costs of prosecution, and in default of payment of such forfeiture and costs, shall be imprisoned in the county jail until such forfeiture and costs of prosecution are paid, but not exceeding six months. The 365 day period shall be measured from the dates of violations which resulted in convictions. (Ord. 4752, 1987).

Chapter 9.43

EXPOSING MINORS TO HARMFUL MATERIALS

Sections:

9.43.010 Definitions.
9.43.020 Unlawful acts designated.
9.43.030 Defenses and exemptions.
9.43.040 Penalty.

9.43.010 Definitions. In this chapter:

A. "Harmful to minors" means that quality of any material describing or representing nudity, sexual conduct, sexual excitement of sadomasochistic abuse, where:

1. The average person, applying contemporary community standards, would find that the material, taken as a whole, appeals to the prurient interest;

2. The material depicts or describes, in a patently offensive way, sexual conduct, sexual excitement or sadomasochistic abuse; and

3. The material, taken as a whole, lacks serious literary, artistic, political or scientific value.

B. "Knowingly" means having general knowledge of, or reason to know, or a belief or ground for belief which warrants further inspection or inquiry of the character and content of any material described herein which is reasonably susceptible of examination by the defendant.

C. "Knowledge of the minor's age" means knowledge or information that the person is a minor, or reason to know, or a belief or ground for belief which warrants further inspection or inquiry of the age of the minor.

D. "Material" means any book, magazine, newspaper or other printed or written material, or any picture, drawing, photograph, motion picture or other pictorial representation or any statue or other figure, or any recording, transcription or mechanical, chemical or electrical reproduction or any other articles, equipment, machines or materials.

E. "Minor" means any person under the age of eighteen years.

F. "Nudity" means the showing of the human male or female genitals, pubic area or buttocks with less than fully opaque covering, or the showing of the female breast with less than a fully opaque covering of any portion thereof below the top of the nipple, or the depiction of covered male genitals in a discernibly turgid state.

G. "Pander" means solicitation through mail or newspaper advertising, external appearance of a store, the presence of signs, or the method in which material is displayed, all or any of which is an active attempt to secure or allow minors to buy or receive materials showing sexual conduct, sexual excitement, sadomasochistic abuse or nudity.

H. "Sexual conduct" means acts of masturbation, homosexuality, sexual intercourse or physical contact with a person's clothed or unclothed genitals, pubic area, buttocks or, if such person is a female, breast.

I. "Sexual excitement" means the condition of human male or female genitals when in a state of sexual stimulation or arousal.

J. "Sadomasochistic abuse" means flagellation or torture by or upon a person clad in undergarments, a mask or bizarre costume, or the condition of being fettered, bound or otherwise physically restrained on the part of one so clothed. (Ord. 4386, 1983; Ord. 3589 §2(part), 1976).

9.43.020 Unlawful acts designated. No person knowingly, and with knowledge of the minor's age, shall sell, exhibit or loan for a monetary consideration, or pander, to a minor any material which is harmful to minors. (Ord. 4386, 1983; Ord. 3589 §2(part, 1976).

9.43.030 Defenses and exemptions. No person shall be subject to the provisions of section 9.43.020:

A. For any sale or exhibition to a minor where such person had reasonable cause to believe that the minor involved was 18 years old or more, and such minor exhibited to such person a driver's license, birth certificate or other official or apparently official document purporting to establish that such minor was 18 years old or more;

B. For any sale or exhibition where a minor is accompanied by a parent or guardian, or accompanied by an adult and such person has no reason to suspect that the adult accompanying the minor is not the minor's parent or guardian;

C. When such person is a bona fide school, museum or public library or is acting in his capacity as an employee of such organization or as a retail outlet affiliated with and serving the educational purposes of such organization. (Ord. 4386, 1983; Ord. 3589 §2(part), 1976).

9.43.040 Penalty. Any person violating any provision of this chapter shall, upon conviction, be subject to a forfeiture of not more than two hundred dollars for each offense. Each day, or portion thereof, during which any violation continues shall be deemed to constitute a separate offense. (Ord. 4386, 1983; Ord. 3589 §2(part), 1976).

Chapter 9.44

GAMBLING

Sections:

9.44.010 Keeping house or device.
9.44.020 Punishment--fine.
9.44.030 Devices--Seizure and destruction.
9.44.040 Enforcing penalty.

9.44.010 Keeping house or device. Every person who shall have, keep or permit to be used in any building or place within the city, used, occupied, or controlled by him, any E.O. table, keno table, faro bank, shuffle board, bagatelle, playing cards, or any other instrument, device or thing used for gambling, whereon or with which money, liquor or any article of value for use shall in any manner be played for, shall upon conviction thereof, be fined in a sum not exceeding five hundred dollars and costs of prosecution. (Prior code §20.18).

9.44.020 Punishment--Fine. Every person who bets any money, property or anything of value, plays at or upon any gambling table, bank or device, prohibited by Section 9.44.010, or who bets upon or plays at any game played at or by means of any such gaming table, bank or device, or on the side of, or against the keeper thereof or any other person, shall on conviction be fined in a sum not exceeding five hundred dollars and costs of prosecution. (Prior code §20.19).

9.44.030 Devices--Seizure and destruction. The city manager, or any councilman, chief of police, or any policeman of this city may seize or direct to be seized any instrument or thing used for the purpose of gaming or by, on or with which money or other article of value may be lost or won and the court before whom such prohibited gambling instruments, devices or things shall be brought shall cause the same to be publicly destroyed by burning or otherwise. Any person obstructing or resisting any of said officers in the performance of any act authorized by this, or the next following section, shall be fined in a sum not exceeding fifty dollars and costs of prosecution. (Prior code §20.20).

9.44.040 Enforcing penalty. In all cases of conviction for the violation of any of the provisions of sections 9.44.010 through 9.44.030, if the defendant neglects or refuses to pay the fine and costs imposed, the court shall enter a judgment that the defendant be imprisoned in the county jail for a term not exceeding three months, unless said fine and costs and expenses of prosecution are sooner paid. (Prior code §20.29 (part)).

Chapter 9.48

PROSTITUTION

Sections:

9.48.010 Houses--Keeping prohibited.
9.48.020 Enforcing penalty.

9.48.010 Houses--Keeping prohibited. If any person shall voluntarily be guilty of keeping or maintaining, or shall be an inmate of, or in any way contribute to the support of any disorderly house or house of ill fame, or place for the practice of fornication, or knowingly own or be interested as proprietor or landlord of any such house, within the limits of the city, he shall on conviction be fined in a sum not exceeding one hundred dollars and costs of prosecution, and in the further sum of one hundred dollars for every twenty-four hours the house shall be continued after the first conviction, or

after such person shall be ordered by the chief of police, or any policeman to suppress, restrain or discontinue the same. (Prior code §20.16).

9.48.020 Enforcing penalty. In all cases of conviction for the violation of any of the provisions of Section 9.48.010, if the defendant neglects or refuses to pay the fine and costs imposed, the court shall enter a judgment that the defendant be imprisoned in the county jail for a term not exceeding three months, unless said fine and costs and expenses of prosecution are sooner paid. (Prior code §20.29(part)).

V. OFFENSES AGAINST PUBLIC PEACE

Chapter 9.50

CARRYING CONTAINERS AND THROWING OBJECTS WITHIN SPECTATOR FACILITIES

Sections:

9.50.020 Throwing objects.
9.50.030 Violation--Penalty.

9.50.020 Throwing objects. No person may throw or drop any bottle, can, container or other item of a similar nature within or from within the confines of a spectator facility owned, controlled or operated by the city or the Eau Claire area school district. (Ord. 3678 (part), 1976).

9.50.030 Violation--Penalty. Any person violating the provisions of Sections 9.50.010 and 9.50.020 shall, upon conviction, forfeit not more than one hundred dollars for each offense. (Ord. 3678 (part), 1976).

Chapter 9.52

PUBLIC INTOXICATION

Sections:

9.52.010 Consumption or possession on school property.
9.52.020 School-sponsored events.
9.52.030 Consumption or the possession of open containers on streets.
9.52.040 Consumption of alcohol beverages or possession of open containers in city buildings, public parking lots, public parking ramps, and private parking areas.
9.52.045 Public Excessive Intoxication.
9.52.050 Penalty.

9.52.010 Consumption or possession on school property. The possession or consumption of fermented malt beverages as defined in Section 125.02(6) of the Wisconsin Statutes, or intoxicating liquor as defined in Section 125.02(8) of the Wisconsin Statutes, is prohibited within any school building or upon any school grounds under the jurisdiction of the Eau Claire Area School District in the city
limits. Any person violating this provision shall upon conviction thereof forfeit not less than $5 nor more than $100 together with costs of prosecution. (Ord. 4627 §3, 1986; Ord. 4063 §1, 1980).

9.52.020 School-sponsored events. The possession or consumption of fermented malt beverages, as defined in Section 125.02(6) of the Wisconsin Statutes, or intoxicating liquor as defined

in Section 125.02(8) of the Wisconsin Statutes, is prohibited at the Carson Park Stadiums during athletic or other events sponsored by the Wisconsin State University-Eau Claire or any other school. Any person violating this provision shall upon conviction thereof forfeit not less than $5 nor more than $100 together with costs of prosecution, and upon failure to pay the same shall be confined in the county jail for not more than 30 days. (Ord. 4627 §4, 1986; prior code §20.47).

9.52.030 Consumption or the possession of open containers on streets. The consumption of or possession of a container which is open and which contains fermented malt beverage or intoxicating liquor as defined by the statutes of the state of Wisconsin, which are herein incorporated by reference, on the streets, sidewalks, alleys or boulevards of the city, is prohibited except at such times and such places as may be specifically exempted temporarily from the provisions hereof from time to time by the city council in connection with public celebrations. This section prohibits the above acts even though the person who violates them is within or upon a vehicle or other conveyance. (Ord. 3684, 1976; Ord. 3300 §I, 1972; Ord. 3157 §I, 1970; prior code §5.01(b)).

9.52.040 Consumption of alcohol beverages or possession of open containers in city buildings, public parking lots, public parking ramps, and private parking areas. A. The consumption of alcohol beverages or the possession of a container which is open and contains an alcohol beverage as defined by Wisconsin Statutes in any city-owned building, public parking lot, public parking ramp or on city property shall be prohibited, except at such times and such places as may be specifically exempted by the city council or city manager, or otherwise approved by this code. This section prohibits the above acts even though the person who violates them is within or upon a vehicle or other conveyance.

B. The consumption of any alcohol beverage or possession of a container which is open and contains an alcohol beverage, as defined by chapter 125 of the Wisconsin Statutes, in any private parking lot or facility held open to the public shall be prohibited unless permission has been granted by the owner or designee and such consumption is not in violation of s. 125.09(1) of that chapter. (Ord. 6466, 2004; Ord. 4643 §1, 1986).

9.52.045 Public Excessive Intoxication. A. Purpose. The City Council finds that excessive consumption of alcohol, use of illicit drugs or improper use of controlled substances commonly produces secondary effects of reduced safety, unruly conduct, inappropriate behavior, and community disruption. This section is created to limit such secondary effects by providing for the health, safety and welfare of the public and creating a safe and welcoming community.

B. Public Excessive Intoxication. It is unlawful for any person to enter into or remain upon any public place while clearly and demonstrably under the excessive influence of alcohol or having used a controlled substance, and such person is or is reasonably likely to become vulnerable to harm, has caused or is reasonably likely to cause harm to themselves or others, or is causing or is reasonably likely to cause a public disturbance.

1. Excessive influence of alcohol or use of controlled substances shall be established through observable indicators, including but not limited to vomiting, public urination, disorientation, incapability of making rational decisions, bloodshot or glassy eyes, slurred speech, an odor of intoxicants or controlled substance, stumbling or staggering, or the failure of standardized field sobriety tests.

2. Public place shall include a place to which the public has access and includes but is not limited to: streets, sidewalks, parking lots, parks and places of business. Places of business include premises open to the public where alcohol is consumed, including a licensed alcohol establishment.

3. Controlled substance shall be defined as those substances included in 340.01(50m), Wisconsin Statutes.(Ord. 7297 §1, 2018).

9.52.050 Penalty. Any person who violates Section 9.52.030 or Section 9.52.040 shall upon conviction forfeit not less than $20.00 nor more than $200.00 together with the costs of prosecution, and upon failure to pay the same shall be confined in the county jail for not more than 30 days. (Ord. 4643 §2, 1986).

Chapter 9.56

DISORDERLY CONDUCT

Sections:

9.56.010 Disorderly conduct.
9.56.020 Prohibiting the harboring of juveniles without parental consent.
9.56.030 Disturbing religious assembly.
9.56.040 Enforcing penalty.
9.56.050 Public good order.
9.56.055 Urination/defecation prohibited.
9.56.060 Violation--Penalty.
9.56.070 Prohibition of noises disturbing the public peace.
9.56.075 Loud parties or gatherings.
9.56.080 Violation--Penalty.
9.56.085 Harassment of police dogs.
9.56.090 Responsibility of owner or occupant.

9.56.010 Disorderly conduct. Whoever does any of the following within the limits of the city shall be subject to a forfeiture of not more than five hundred dollars:

A. In a public or private place engages in violent, abusive, indecent, profane, boisterous, unreasonably loud or otherwise disorderly conduct under circumstances in which the conduct tends to cause or provoke a disturbance; or

B. With intent to annoy another, makes a telephone call, whether or not conversation ensues. (Ord. 4531, 1984; Ord. 4378 §1, 1983; Ord. 3944 §1, 1978).

9.56.020 Prohibiting the harboring of juveniles without parental consent. A. It shall be unlawful for any owner, tenant, or person in control of a residence or other facility to knowingly allow or permit a child under the age of 18 to loiter, idle, or remain in said residence or upon said property without the consent of the child's parent, guardian, or spouse.

B. Any person violating the provisions of this section shall, upon conviction thereof, forfeit not more than $500 plus the costs of prosecution for each offense. (Ord. 5686 §3, 1997).

9.56.030 Disturbing religious assembly. Any person who disturbs any congregation or assembly, met for religious worship, by making a noise, or by rude and indecent behavior, or profane discourse within the place of worship, or so near the same as to disturb the order and solemnity of the meeting shall be subject to a fine not exceeding fifty dollars and costs of prosecution. (Prior code §20.06).

9.56.040 Enforcing penalty. Any person in default of payment of forfeitures and costs of prosecution fixed in Section 9.56.030 shall be imprisoned in the county jail of Eau Claire County for not more than thirty days. (Prior code §20.09(part)).

9.56.050 Public good order. It is unlawful for any person or persons to stand, loiter or congregate in any street or upon any sidewalk, bridge, crossing or other public place so as to obstruct the same, or to hinder, prevent or annoy persons passing or attempting or desiring to pass therein or thereupon or into or out of any building, private or public; nor shall any person make remarks, gestures, noises, signs or the like to disturb, annoy or insult any person being upon or passing along any street, sidewalk, bridge, crossing or other public place, or along, into or out of any public carrier, provided that this section shall not apply to acts made lawful by Section 103.53 of the statutes of Wisconsin. (Prior code §5.13(part)).

9.56.055 Urination/defecation prohibited. No person shall publicly urinate or defecate in any public place, on any public property, or on any private property not designed, intended, and approved for such use. (Ord. 6467 §1, 2004).

9.56.060 Violation--Penalty. Any person violating any provisions of section 9.56.050, section 9.56.055, or any order given under their authority shall, upon conviction thereof, be subject to a fine of not less than ten dollars or more than $60.00 and the costs of prosecution, and in default of the payment of the fine and costs of prosecution, shall be imprisoned in the county jail until said fine and costs of prosecution are paid, but not to exceed thirty days. (Ord. 6467 §2, 2004; Prior code §5.13(3)(part)).

9.56.070 Prohibition of noises disturbing the public peace. A. No person shall make or assist in making any noise tending to unreasonably disturb the peace and quiet of persons in the vicinity thereof unless the making and continuing of the same cannot be prevented and is necessary for the protection and preservation of property or of the health, safety, life or limb of some person.

B. No person, firm or corporation occupying or having charge of any building or premises, or any part thereof shall cause, suffer or allow any loud, excessive or unusual noise in the operation or use of any mechanical or electrical device, instrument or machine, which loud, excessive or unusual noise will disturb the comfort, quiet or repose of persons therein or in the vicinity.

C. No person, firm or corporation occupying or having charge of any building or premises, or any part thereof, shall cause, suffer or allow any loud, excessive or unusual noise to occur in such building or on such premise, which would disturb the comfort, quiet or repose of persons therein or in the vicinity.

D. The use of radio loudspeakers or amplifiers, phonographs, and similar devices in the streets, alleys, or public places in the city or in or on buildings or structures along any such streets, alleys, or public places in such manner that the sound or noise produced or conveyed thereby in any such street, alley, or public place is loud or boisterous or such as may endanger or injure the comfort, repose, health or safety of others, is prohibited.

E. No person shall employ the use of an engine braking system which utilizes engine exhaust to slow the vehicle, commonly referred to as compression braking or engine braking, except in the case of an emergency.* (Ord. 6617 §1, 2005; Ord. 4748 §1, 1987; Ord. 3944 §2, 1978).

9.56.075 Loud parties or gatherings. A. No person occupying or having charge of any building or premises, or any part thereof, shall cause, suffer or allow any loud, excessive or unusual noise in those places while hosting or permitting a party, social gathering, meeting or assembly of any kind, where such noise would disturb the comfort, quiet or repose of persons therein or in the vicinity.

B. Any party or gathering that violates this section shall cease and disperse immediately upon the order of a police officer and all persons not domiciled at the site of such gathering shall leave the premises immediately. Any person who fails or refuses to obey and abide by such order shall be guilty of a violation of this subsection. (Ord. 6220, 2001; Ord. 4748 §2, 1987).

9.56.080 Violation--Penalty. Any person violating the provisions of sections 9.56.070 or 9.56.075 shall upon conviction forfeit a sum of not less than one dollar nor more than five hundred dollars for each offense together with the costs of prosecution and in default of the payment of such forfeiture and costs such person shall be confined in the county jail for a term of not less than five days nor more than sixty days unless such forfeiture and costs are sooner paid, and each day's violation constitutes a separate offense. (Ord. 4748 §3, 1987; Ord. 4378 §2, 1983; Ord. 4072 §5, 1980; prior code §20.41).

9.56.085 Harassment of police dogs. A. No person shall knowingly resist, obstruct, or interfere with any police dog on duty. Furthermore, no person shall harass or tease a police dog at any time. Police dogs on duty shall also be exempt from the provisions of the animal control ordinances of Chapter 6 of this code.

B. Any person violating the provisions of this section shall, upon conviction thereof, forfeit not more than $500 plus the costs of prosecution for each offense. (Ord. 5047, 1990).

9.56.090 Responsibility of owner or occupant. A. In this section "knowingly" means having received notice from the police department by verbal or written communication.

B. Following the occurrence of conduct or activity upon any premises, which conduct or activity is prohibited by either section 9.56.010, 9.56.070, 9.56.075 or s. 947.01 of the Wisconsin Statutes, the issuance of a citation, arrest or conviction, no owner, tenant or person in charge of such premises shall knowingly permit any such conduct or activity to reoccur upon the said premises without first making a timely, reasonable and bona fide attempt, verbally or in writing, which directs the cessation of such conduct or activity. Whether or not the conduct or activity actually ceases shall not determine whether a timely, reasonable and bona fide attempt is made under this section.

C. Any person violating the provisions of this section shall, upon conviction, forfeit not more than five hundred dollars for each offense. (Ord. 4761, 1987; Ord. 4378 §3, 1983).

---

* Ed. Note: Ordinance 6617 provided as follows: "This ordinance shall become effective upon approval by the Wisconsin Department of Transportation of the city's application to install signage in state highway right of way in the city of Eau Claire prohibiting engine braking."

Chapter 9.58

BLOCK PARTY

Sections:

9.58.010 Definition.
9.58.020 Purpose.
9.58.030 Application.
9.58.040 Approval.
9.58.050 Noise.
9.58.060 Hours.
9.58.070 Termination.
9.58.080 Appeal.
9.58.090 Violation--Penalty.

9.58.010 Definition. Block party ("party") shall mean a neighborhood social and recreational gathering of persons residing in adjacent city blocks where a portion of a street or alley sought to be closed and used for the gathering is completely residential. A party is a privately sponsored gathering that is not sponsored by an organization or business. A party does not involve the sale of food, alcohol, or concessions. (Ord. 6579, 2005.).

9.58.020 Purpose. The purpose of a block party is to bring neighbors together to get to know each other, provide a forum for solving neighborhood problems, provide a sense of safety, assist in crime prevention, and build a sense of community. (Ord. 6579, 2005).

9.58.030 Application. Application for approval of a party shall be submitted to the Chief of Police or designee at least 15 days prior to said party. (Ord. 6579, 2005).

9.58.040 Approval. The chief of police or designee may approve, approve with conditions, or deny the application for reasons of public health, safety, or welfare, or due to violation of this section, the city code of ordinances, or applicable state or federal law. The applicant may be requested to meet with the chief of police or designee to review the application. (Ord. 6579, 2005).

9.58.050 Noise. Parties are subject to noise regulation under ch. 9.56. (Ord. 6579, 2005).

9.58.060 Hours. A street or alley closed for a party shall be reopened 30 minutes prior to

sunset. (Ord. 6579, 2005).

9.58.070 Termination. If the police department receives valid complaints concerning the party or the party does not conform to the conditions of the approved application, the police department may order the party to cease. (Ord. 6579, 2005).

9.58.080 Appeal. Appeal from a denial made under this chapter shall be made to the administrative review board under the procedures specified in ch. 1.06. (Ord. 6579, 2005).

9.58.090 Violation--Penalty. Any person violating any provision of this chapter, or any order, requirement, or condition imposed under this chapter by the chief of police or designee, shall be subject to a forfeiture of not less than $50 or more than $500 per day for each violation, together with the costs of prosecution. (Ord. 6579, 2005).

Chapter 9.59

SPECIAL EVENTS

Sections:

9.59.005 Purpose.
9.59.010 Definition.
9.59.015 Exceptions.
9.59.020 Permit required.
9.59.030 Review and approval.
9.59.040 Permit application.
9.59.050 Special event fees.
9.59.060 Alcohol sales.
9.59.080 Noise.
9.59.090 Parks--Public grounds.
9.59.100 Public streets and alleys.
9.59.110 Liability and insurance.
9.59.120 Appeal.
9.59.140 Violation--Penalty.

9.59.005 Purpose. Special events are community events such as parades on city streets, athletic events, charity walks and runs, music festivals, and other events that meet the definition in this chapter. Such events are allowed subject to the reasonable requirements of this chapter, city ordinances and of the policies and procedures of the community services department. The city council finds such requirements necessary to promote the equitable and efficient use, and continued protection of limited public park and other lands, to allow for the efficient use of limited city staff resources through proper planning for such events, and to protect the public health, safety, and welfare. (Ord. 7202, 2016; Ord. 7161 §1, 2015; Ord. 6592 §1, 2005).

9.59.010 Definition. A special event is defined as follows:

A. A special event shall mean a scheduled public gathering of persons, on city property, to which the public is invited and one of the following:

1. over 100 persons are expected to attend in a single day; or
2. at which concessions are to be sold, such as food or beverages; or
3. at which merchandise or other items are to be sold, such as clothing or crafts; or
4. at which fireworks are to be discharged; or
5. at which an entry fee or admission is charged for participation or inclusion; or
6. at which over 2 half barrels of fermented malt beverage or wine are to be present; or

7. at which intoxicating liquor will be served; or

8. which will reasonably require, based on then existing city policies and procedures, the provision of city support services to accommodate the event on public property.

B. A special event is open to the public at a predetermined location on public property, including, but not limited to, city parks, streets, and sidewalks.

C. Marches and public assemblies held for the purpose of conducting activities protected by the First Amendment to the United States Constitution as defined and provided for in Ch. 9.60 are not special events. (Ord. 7161 §1, 2015; Ord. 6592 §1, 2005).

9.59.015 Exceptions. This chapter shall not apply to any of the following:

A. Any march, public assembly, or other activity protected by the First Amendment to the United States Constitution.

B. City sponsored events.

C. Funeral processions.

D. Events exempted by contract with the city of Eau Claire. (Ord. 6592 §1, 2005).

9.59.020 Permit required. A special event shall have a special events permit. It is unlawful for a special event to take place without a special events permit. (Ord. 6592 §1, 2005).

9.59.030 Review and approval. Review and approval of special events permits shall occur as follows:

A. City Council Approval. City council approval for a special event is required for special events:

1. at which 1,000 people or more are expected to attend; or

2. at which 6 or more half barrels of fermented malt beverage or wine are to be present or served over the duration of the special event; or

3. at which alcohol will be served past sunset or 8 o'clock in the evening, whichever is later; or

4. at which alcohol is to be served on the streets, sidewalks, alleys or boulevards of the city; or

5. which will require the closing of a street; or

6. which will require the alteration of park operation hours; or

7. which has been referred to the council for approval by the director of community services or the chief of police or the designee of that person.

B. Administrative Approval. All special events not requiring city council approval as designated in the above paragraph shall be subject to administrative approval by the director of community services and further approval of the chief of police as necessary herein, or their designees. The director of community services and the chief of police or their designees may choose not to administratively approve any special event permit and may instead submit the special event permit for city council approval. Any special event permit denied administrative approval may be appealed to the city council.

C. Permits may be approved, approved with conditions, or denied when necessary due to physical availability of the requested event space, the limited availability of city staff, the compatibility of the proposed special event with park users and other previously scheduled special events, compliance with city ordinances and Fee and License Schedule, potential damage to the proposed facility, the ability to follow health department food regulations, to protect the public health, safety or welfare, or due to violation of this section, the city code of ordinances, or applicable state or federal law.

D. For special events using public streets or sidewalks, such as parades, races, and walks, the chief of police or designee may approve, approve with conditions, or deny the permit when necessary due to physical availability of the requested event space, the limited availability of city staff, the compatibility of the proposed special event with park users and other previously scheduled special events, compliance with city ordinances and Fee and License Schedule, potential damage to the proposed facility, the ability to follow health department food regulations, to protect the public health, safety, or welfare, or due to violation of this section, the city code of ordinances, or applicable state or federal law.

E. The applicant shall be required to meet with the director of community services or the chief of police or the designee of that person, to review the special event application for a first-time event; or for an event making a significant change from the previous year's event; or for an event for which the city received a complaint or was in violation of city ordinances in the previous year. (Ord. 7202, 2016; Ord. 7161 §1, 2015; Ord. 6592 §1, 2005).

9.59.040 Permit application. Application for a special events permit shall be submitted to the community services department at least 60 days prior to the special event for events requiring city council approval and at least 30 days prior to the special event for events requiring administrative approval by the director of community services and the chief of police or the designee of that person and shall include at least the following information:

A. Completed application form.

B. Copy of a current tax exempt identification number, if applicable.

C. A layout or map, which accurately depicts the proposed use of the public property requested.

D. A non-refundable application fee, as stated in the City of Eau Claire Fees and Licenses Schedule. (Ord. 7202, 2016; Ord. 7161 §1, 2015; Ord. 6592 §1, 2005).

9.59.050 Special event fees. A. The application fee shall be as stated in the City of Eau Claire Fees and Licenses Schedule.

B. Fees for use of public property and services shall be as stated in the City of Eau Claire Fees and Licenses Schedule.

C. The city council may approve an agreement with a special event permit holder that provides for actual cost recovery by the city in lieu of the fees stated in the City of Eau Claire Fees and Licenses Schedule. (Ord. 6592 §1, 2005).

9.59.060 Alcohol sales. It is the responsibility of the special event permit holder to obtain a temporary Class "B" fermented malt beverage license per s. 9.76.100 if alcohol is to be sold at the special event. The license holder shall, in addition to all other requirements of the law, the city liquor license, and this section, take reasonable steps to ensure that alcohol beverages are consumed only by persons who are of legal drinking age, and not by persons who are not of age or who are intoxicated. Reasonable steps shall include the use of wristbands to indicate individuals of legal drinking age, the use of clear cups to serve alcohol, the prohibition of consumption of alcohol by bartenders while on duty, prohibition of sales to anyone under 21 years of age even if accompanied by parent or guardian, and supervision of the area by security and staff personnel. Reasonable steps may also include, especially for larger or longer duration events, the following or other best practices to ensure lawful and safe use of alcohol, the use of barriers and fences to enclose the area where alcohol is to be consumed, and/or police services fee per the City of Eau Claire Fees and Licenses Schedule for events serving 6 or more half barrels of beer during the duration of the special event. Failure to take reasonable steps and use them at all times when alcohol is sold is grounds for termination of the event, issuance of a city ordinance citation, or denial of the fermented malt beverage license or special events permit in the future. (Ord. 7161 §1, 2015; Ord. 6592 §1, 2005).

9.59.080 Noise. The special events permit holder is subject to noise regulation under ch. 9.5 and shall not permit the sound of the event to be heard reasonably beyond the boundaries of the public property used for the special event at unreasonable levels. (Ord. 6592 §1, 2005).

9.59.090 Parks--Public grounds. A special event permit shall not exempt the permit holder or guests from the requirements of ch. 9.76 regulating parks and public grounds. (Ord. 6592 §1, 2005).

9.59.100 Public streets and sidewalks. All use of public streets and sidewalks for special events shall be on routes approved by the chief of police or designee. The chief of police may designate what streets and sidewalks or what portions thereof may be used for a special event. It shall be the duty of the permit holder to obey any such designation when made. Failure to obey shall be a violation of this section by the permit holder and may result in the termination of the event or

issuance of a city ordinance citation. A future special events permit may be denied based on a past violation of this section. (Ord. 6592 §1, 2005).

9.59.110 Liability and insurance. A. The special events permit holder agrees to indemnify, defend, save, and hold harmless the city, its officers and employees, from and against any and all claims, liability, lawsuits, damages, and causes of action which may arise out of the special event.

B. The special events permit holder shall provide proof of liability and property damage insurance in the amount of at least $1,000,000 per occurrence, with the city of Eau Claire named as an additional insured.

C. The special events permit holder shall provide to the director of community services, at least 15 days prior to the event, a certificate of insurance as evidence that the requirements set forth in this section have been met. (Ord. 7202, 2016; Ord. 6592 §1, 2005).

9.59.120 Appeal. A denial of a permit may be appealed by the permit holder to the administrative review board under the procedures specified in ch. 1.06. (Ord. 6592 §1, 2005).

9.59.140 Violation--Penalty. A. Failure to obey provisions of this section, or any order, requirement, or condition imposed under this chapter by the director of community services or designee, shall be a violation of this chapter by the permit holder and may result in the termination of the event. A future permit may be denied based on a past violation of this chapter.

B. Any person violating any provision of this chapter, or any order, requirement, or condition imposed under this chapter by the director of community services or designee, or the chief of police or designee, shall be subject to a forfeiture of not less than $50 or more than $500 per day for each violation, together with the costs of prosecution. (Ord. 7202, 2016; Ord. 6592 §1, 2005).

Chapter 9.60

MARCHES AND PUBLIC ASSEMBLIES

Sections:

9.60.010 Definitions.
9.60.020 Permit required.
9.60.030 Exception for city parks.
9.60.040 Special event permit.
9.60.050 Hours.
9.60.060 Noise restricted.
9.60.070 Parks--Public grounds.
9.60.080 Application for permit.
9.60.090 Application time limit.
9.60.100 Review and recommendation.
9.60.110 Notice of denial of application.
9.60.120 Appeal procedure.
9.60.130 Fees and costs.
9.60.140 Violation--Penalties.

9.60.010 Definitions. As used in this chapter:

A. The term “march” shall mean a group of persons moving from one place to another on a public way or public place, which requires a street closing or otherwise requires police officers to stop or reroute traffic or pedestrians because marchers will not comply with traffic regulations and controls. A march is for the purpose of conducting activities which are protected by the First Amendment to the United States Constitution.

B. The term “public assembly” shall mean an organized public gathering or group of persons which is reasonably anticipated to obstruct the normal flow of vehicular or pedestrian traffic upon a

public way or the normal use of a public place because those assembled will not comply with the traffic regulations or controls or other public place use laws or policies, and that is collected together in one place, but does not meet the definition of a march. A public assembly is for the purpose of conducting activities which are protected by the First Amendment to the United States Constitution.

C. The term "public way" shall mean streets, sidewalks, alleys, trails, paths, or any other public ways.

D. The term "public place" shall mean any property under the control of, owned, managed, leased, or operated by the city of Eau Claire which is held open to the public for public use. (Ord. 6593 §1, 2005).

9.60.020 Permit required. A march or public assembly in the city shall be required to obtain a permit from the city clerk, which shall be issued only after review and recommendation by the chief of police or designee. (Ord. 6593 §1, 2005).

9.60.030 Exception for city parks. A person or organization that has reserved a pavilion in a city park or that has been issued a special event permit under ch. 9.59 for use of a city park need not apply for a permit hereunder. (Ord. 6593 §1, 2005).

9.60.040 Special event permit. Applicants under this chapter also meeting the definition of and requiring a permit as a special event under ch. 9.59 shall be required to meet all terms and conditions of that chapter, as applicable, including, but not limited to the sale of merchandise, serving of alcohol, or other activities beyond the scope of the First Amendment to the United States Constitution. (Ord. 6593 §1, 2005).

9.60.050 Hours. A march or public assembly using a city park shall only be permitted to use the city park during its applicable hours of operation. (Ord. 6593 §1, 2005).

9.60.060 Noise restricted. The march or public assembly is subject to noise regulation under ch. 9.56 and shall not permit the sound of the event to be heard at unreasonable levels beyond the general boundaries of the public way or public place used for the march or public assembly. (Ord. 6593 §1, 2005).

9.60.070 Parks--Public grounds. A permit shall not exempt the permit holder or participants from the requirements of ch. 9.76 regulating parks and public grounds. (Ord. 6593 §1, 2005).

9.60.080 Application for permit. A person seeking a march or public assembly permit shall file an application with the city clerk on forms provided. The application shall be signed by the applicant upon oath or affirmation that the statements contained therein are true and correct to the best of the applicant's knowledge. The application shall be promptly forwarded to the chief of police or designee for review. If the permit is granted, the city clerk shall issue the permit forthwith. (Ord. 6593 §1, 2005).

9.60.090 Application time limit. Application for a permit under this chapter shall be submitted to the city clerk at least seven (7) days before the date of the proposed march or public assembly. The chief of police or designee may waive the time limit of any proposed march or public assembly after due consideration of the date, time, and place of the event, the anticipated number of participants, the city services required in connection with the event, and issues of public safety. (Ord. 6593 §1, 2005).

9.60.100 Review and recommendation. A. The chief of police or designee shall investigate the facts set out in the application and shall recommend that the city clerk issue the permit when he or she finds that:

1. The march or public assembly will not substantially interrupt the safe and orderly movement of other pedestrians or vehicular traffic contiguous to its route or location;

2. The march or public assembly will not require a diversion of so great a number of city police officers as to prevent normal police protection of the city;

3. The concentration of persons, animals, and vehicles will not unduly interfere with proper fire and police protection or other public services within the city;

4. Adequate sanitation and other required health facilities are or will be made available in or adjacent to the area in which the march or public assembly will take place;

5. Sufficient parking, including handicapped parking, exists near the area of the march or public assembly to accommodate the number of vehicles reasonably expected;

6. The proposed activity will not interfere with the use of the requested area by another party to whom a valid permit has been issued for the same area or route;

7. No other event is scheduled elsewhere in the city where police resources required for that event are so great that the deployment of police services for the proposed march or public assembly would have an immediate and adverse effect upon the welfare and safety of persons and property; and

8. The application contains sufficient information about the proposed march or public assembly to enable the chief of police or designee to evaluate the event under this section.

B. In investigating the application, the chief of police or designee may recommend a date, time, location, or route different from that requested by the applicant. This alternative recommendation shall, to the extent practicable, authorize an event that will have comparable public visibility and a similar route, location, and date to that of the proposed event. The chief of police or designee may also recommend terms and conditions necessary in his judgment to protect the public peace, health, and safety, including, but not limited to restricting the portion of the public way or public place that may be used for the event and the hours thereof, and the type and number of blockades or warning devices that are to be provided for the safety of motorists and the protection of those persons participating in the march or public assembly. Such conditions may be imposed only for articulable reasons, which reasons may include, but are not limited to those based on the safety of the public or the participants in the event, danger of injury to private property, hardship to the residents or owners of private property adjacent to proposed locations for permitted activities, or unreasonably adverse impact upon vehicular or pedestrian traffic. Such reasons shall be reduced to writing and provided to the applicant for the permit. In deciding whether or not to impose such conditions, the chief of police or designee may consider the hardship to the march or public assembly organizers in meeting the conditions prior to the event. Nothing herein shall be construed to allow noncompliance with the city's noise ordinance under ch. 9.56.

C. If the chief of police or designee denies an application for failure to provide sufficient information on the application, he shall specify what additional information must be provided on a new or amended application. (Ord. 6593 §1, 2005).

9.60.110 Notice of denial of application. The chief of police or designee shall act promptly to review and issue a recommendation to the city clerk. If the chief of police or designee recommends denial, then the city clerk shall deny the permit and notify the applicant by facsimile transmission, telephonically, e-mail, or by U. S. mail of the denial and provide a summary of the facts and conclusions of the chief of police or designee which are the basis for the denial. (Ord. 6593 §1, 2005).

9.60.120 Appeal procedure. Appeal from determinations made under this section shall be made to the administrative review board under the procedures specified in ch. 1.06. The administrative review board shall expedite the appeal process by providing a hearing within ten days of receipt of a written request for an appeal. (Ord. 6593 §1, 2005).

9.60.130 Fees and costs. A. An applicant for a permit may be required to submit to the city treasury, before the permit is issued, a traffic-control fee in an amount established by the chief of police or designee. The traffic-control fee shall be based on consideration of the following information which shall serve as a standard to guide his discretion in setting the fee:

1. The route for the march;
2. The time of day the march or public assembly is to take place;
3. The date and day of the week proposed;

4. The general traffic conditions in the area requested, both vehicular and pedestrian, with special attention being given to the rerouting of vehicles or pedestrians normally using the requested area;

5. The number of marked and unmarked intersections along the route requested, together with the traffic-control devices present;

6. The number of marked and unmarked intersections and traffic-control devices if traffic must be completely rerouted from the area;

7. The estimated number of participants and vehicles;

8. The nature, composition, format, and configuration of the march or public assembly;

9. The anticipated weather conditions;

10. The estimated time or duration of the march or public assembly;

11. The plan of the applicant for emergency medical services;

12. Sufficient parking near the march route to accommodate the number of vehicles reasonably expected, including provisions arranged for and made by the applicant for handicapped parking; and

13. Applicable fees as stated in the City of Eau Claire Fees and Licenses Schedule.

B. The traffic-control fee shall cover the cost to the city of providing sufficient officers to regulate traffic and maintain public order incident to the proposed march or public assembly. The fee shall not be increased by consideration of the nature, substance, or content of the subject matter or speech for which the march or public assembly is organized, nor by consideration of the potential for hostile counter activity. The city shall bear the additional costs that are necessary to deal with the possibility of disorder arising out of the nature and content of the subject matter or speech for which the march or public assembly is organized.

C. Marches and public assemblies that utilize public ways and public places shall be assessed applicable fees as stated in the City of Eau Claire Fees and Licenses Schedule. Said fees are payable to the city treasury prior to issuance of the permit. (Ord. 6593 §1, 2005).

9.60.140 Violation--Penalties. A. Failure to obey provisions of this section, or any order, requirement, or condition imposed under this chapter by the chief of police or designee, shall be a violation of this chapter by the permit holder and may result in the termination of the event. A future permit may be denied based on a past violation of this chapter.

B. Any person violating any provision of this section, or any order, requirement, or condition imposed under this section by the chief of police or designee, shall be subject to a forfeiture of not less than $50 or more than $500 per day for each violation, together with the costs of prosecution. (Ord. 6593 §1, 2005).

VI. OFFENSES AGAINST PROPERTY

Chapter 9.61

TRESPASS

Sections:

9.61.010 Trespass to land.
9.61.020 Trespass to dwellings.
9.61.030 Trespass to construction site.
9.61.040 Penalties.

9.61.010 Trespass to land. Wisconsin Statutes s. 943.13 regarding trespass to land, exclusive of penalty, is hereby adopted by reference and made an offense punishable as a violation of this chapter. (Ord. 6304, 2002).

9.61.020 Trespass to dwellings. Wisconsin Statutes s. 943.14 regarding trespass to

dwellings, exclusive of penalty, is hereby adopted by reference and made an offense punishable as a violation of this chapter. (Ord. 6304, 2002).

9.61.030 Trespass to construction site. Wisconsin Statutes s. 943.15 regarding trespass onto a construction site or into a building, dwelling, or room, exclusive of penalty, is hereby adopted by reference and made an offense punishable as a violation of this chapter. (Ord. 6304, 2002).

9.61.040 Penalties. Any adult person violating this ordinance shall be subject to a forfeiture of not less than $100.00 nor more than $500.00, exclusive of costs, and upon failure to pay the same shall be confined in the county jail for not more than 30 days. (Ord. 6304, 2002).

Chapter 9.62

RETAIL THEFT

Sections:

9.62.010 Definitions.
9.62.020 Retail theft.
9.62.030 Detention.
9.62.040 Evidence.
9.62.050 Severability.
9.62.060 Penalty.

9.62.010 Definitions. In this section:

A. "Merchandise" means one or more items of property with a total retail value of up to $300.00, exclusive of sales tax.

B. "Merchant" includes any "merchant" as defined in s. 402.104(3), Wis. Stats., and includes any innkeeper, motel keeper, or hotelkeeper.

C. "Property" means one or more items of merchandise with a total retail value of up to $300.00, exclusive of sales tax.

D. "Theft detection device" means any tag or other device that is used to prevent or detect theft and that is attached to merchandise held for resale by a merchant or to property of a merchant.

E. "Theft detection device remover" means any tool or device used, designed for use, or primarily intended for use in removing a theft detection device from merchandise held for resale by a merchant or property of a merchant.

F. "Theft detection shielding device" means any laminated or coated bag or device designed to shield merchandise held for resale by a merchant or property of a merchant from being detected by an electronic or magnetic theft alarm sensor.

G. "Value of merchandise" has the meaning designated in s. 943.50(1)(b), Wis. Stats. (Ord. 6305 §1, 2002).

9.62.020 Retail Theft. Any person may be penalized as provided in s. 9.62.060 if he or she does any of the following without the merchant's consent and with intent to deprive the merchant permanently of possession or the full purchase price of the merchandise or property:

A. Intentionally alters indicia of price or value of merchandise held for resale by a merchant or property of a merchant.

B. Intentionally takes and carries away merchandise held for resale by a merchant or property of a merchant.

C. Intentionally transfers merchandise held for resale by a merchant or property of a merchant.

D. Intentionally conceals merchandise held for resale by a merchant or property of a merchant.

E. Intentionally retains possession of merchandise held for resale by a merchant or property of a merchant.

F. While anywhere in the merchant's store, intentionally removes a theft detection device from merchandise held for resale by a merchant or property of a merchant.

G. Uses, or possesses with intent to use, a theft detection shielding device to shield merchandise held for resale by a merchant or property of merchant from being detected by an electronic or magnetic theft alarm sensor.

H. Uses, or possesses with intent to use, a theft detection device remover to remove a theft detection device from merchandise held for resale by a merchant or property of a merchant. (Ord. 6305 §1, 2002).

9.62.030 Detention. A merchant, a merchant's adult employee, or a merchant's security agent who has reasonable cause for believing that a person has violated this section in his or her presence may detain the person in a reasonable manner for a reasonable length of time to deliver the person to a peace officer, or to his or her parent or guardian in the case of a minor. The detained person must be promptly informed of the purpose for the detention and be permitted to make phone calls, but he or she shall not be interrogated or searched against his or her will before the arrival of a peace officer who may conduct a lawful interrogation of the accused person. The merchant, merchant's adult employee, or merchant's security agent may release the detained person before the arrival of a peace officer or parent or guardian. Any merchant, merchant's adult employee, or merchant's security agent who acts in good faith in any act authorized under this section is immune from civil or criminal liability for those acts. (Ord. 6305 §1, 2002).

9.62.040 Evidence. Pursuant to s. 66.0107 and s. 943.50(3m)(a), Wis. Stats., in any action or proceeding for violation of this ordinance, duly identified and authenticated photographs of merchandise which was the subject of the violation may be used as evidence in lieu of producing merchandise. (Ord. 6305 §1, 2002).

9.62.050 Severability. If any section or part of this ordinance is adjudged unconstitutional or invalid by any court of competent jurisdiction, the validity of the remainder of this ordinance shall not be affected thereby and shall be in full force and effect as if said unlawful section was not originally a part hereof. (Ord. 6305 §1, 2002).

9.62.060 Penalties. A. Any adult person violating any section of this ordinance shall be subject to a forfeiture of not less than $100.00 nor more than $500.00, exclusive of costs, and upon failure to pay the same shall be confined in the county jail for not more than 30 days.

B. Any juvenile person violating any section of this ordinance shall be subject to a forfeiture of $50.00. (Ord. 6305 §1, 2002).

Chapter 9.63

DAMAGE TO PROPERTY

Sections:

9.63.010 Damage to property.
9.63.020 Liability.
9.63.030 Penalty.

9.63.010 Damage to property. Wisconsin Statutes s. 943.01 regarding damage to property, exclusive of penalty, is hereby adopted by reference and made an offense punishable as a violation of this chapter. (Ord. 6306, 2002).

9.63.020 Liability. Any person violating this ordinance shall be liable for the costs of replacing or repairing damaged or destroyed property. The parents of any unemancipated minor child

who violates this ordinance may be held liable for the costs of replacing or repairing damaged or destroyed property in accordance with s. 895.035, Wis. Stats. (Ord. 6306, 2002).

9.63.030 Penalty. Any adult person violating this ordinance shall be subject to a forfeiture of not less than $100.00 nor more than $500.00, exclusive of costs, and upon failure to pay the same shall be confined in the county jail for not more than 30 days. (Ord. 6306, 2002).

Chapter 9.64

FENCES

Sections:

9.64.010 Barb wire permitted when.
9.64.015 Electric fences.
9.64.020 Nuisance, when.
9.64.030 Spite fences.
9.64.040 Violation--Penalty.

9.64.010 Barb wire permitted when. No owner or occupant of any platted land in the city shall erect, construct or maintain any fence constructed wholly or in part of barb wire, where the barb wire is placed on the outside of such fence, along any public street or alley, or between any lots or parts of lots as a division fence where such lots are used for residential purposes; provided, however, that such barb wire may be placed upon the inside of such fences where smooth wires are placed on the outside and so placed as to protect from injury the clothing and persons of pedestrians and travelers, lawfully being or proceeding on the outside of such fences.

The forgoing shall not apply to any unplatted land in the city which is zoned R-1A under Title 18. (Ord. 5214 §1, 1992; Prior code §20.42).

9.64.015 Electric fences. No person shall install or maintain any electrically-charged fence within the city, except within an area which is zoned R-1A under Title 18, where the purpose of such fence is to retain domestic animals, horses or livestock and where such fence is not hazardous to life. (Ord. 5214 §2, 1992).

9.64.020 Nuisance, when. Any fence which does not comply with the provisions of ss. 9.64.010 or 9.64.015 is declared to be a public nuisance and may be abated according to law. (Ord. 5214 §3, 1992; Prior code §20.43).

9.64.030 Spite fences. Section 844.10 of the Wisconsin Statutes for 1965 is adopted herein and made a part hereof by reference. (Ord. 3808, 1977; Prior code §20.44).

9.64.040 Violation--Penalty. Any person, firm or corporation who violates the provisions of this chapter relating to fences shall upon conviction thereof be punished by a fine of not more than one hundred dollars and costs of prosecution and in default of payment thereof shall be imprisoned in the county jail not to exceed thirty days unless the fine and costs are sooner paid. (Prior code §20.45).

Chapter 9.65

GRAFFITI

Sections:

9.65.010 Purpose.
9.65.020 Definition.
9.65.030 Public nuisance.
9.65.040 Graffiti prohibited.
9.65.050 Liability.
9.65.060 Notice to police department.
9.65.070 Abatement of graffiti.
9.65.080 Failure to abate--Public nuisance.
9.65.090 Other methods not excluded.
9.65.100 Violation--Penalty.

9.65.010 Purpose. A. The city council finds that graffiti is vandalism that destroys property and contributes to social disorder and crime. Graffiti is linked to other illegal activities that include vandalism, theft, truancy, curfew violations, underage alcohol use, illicit drug use, and street gang membership. Furthermore, the presence of graffiti contributes to the degradation of buildings and the decay of neighborhoods, leading to urban blight. Communities nationwide have found that immediate reporting and removal of graffiti is the most effective method of graffiti prevention.

B. The city council thus desires to minimize, prevent, and control these adverse effects caused by graffiti and thereby protect the peace, health, safety, and general welfare of the citizens of the city of Eau Claire; protect the citizens from increased crime; preserve the quality of life; preserve the property values and character of its neighborhoods; and deter the spread of urban blight. (Ord. 6713 §1, 2006).

9.65.020 Definition. Graffiti shall mean any inscription, work, figure, drawing, symbol, design, or other marking which is scratched, etched, drawn, or painted with spray paint, liquid paint, ink, chalk, dye, or other similar permanent or semi-permanent substance, on public or private property, without the prior express permission or consent of the property owner. Graffiti shall not include public art approved in accordance with section 9.76.230. (Ord. 7243 §2, 2017; Ord. 6713 §1, 2006).

9.65.030 Public nuisance. Graffiti is hereby declared to be a public nuisance under chapter 9.36 of this code affecting peace and safety. (Ord. 6713 §1, 2006).

9.65.040 Graffiti prohibited. No person shall affix graffiti upon any property, whether private or public, without the prior express permission or consent of the property owner. (Ord. 6713 §1, 2006).

9.65.050 Liability. Any person who shall affix graffiti to any property without the prior express permission or consent of the property owner shall be liable for the costs of removing or covering such graffiti in addition to any forfeitures imposed for violation of this section. The parent(s) or guardian of an unemancipated minor child who affixes graffiti may be held liable for the cost of removing or covering said graffiti in accordance with Wis. Stats. s. 895.035. (Ord. 6713 §1, 2006).

9.65.060 Notice to police department. Every owner or occupant of a property defaced by graffiti shall notify the city of Eau Claire police department within 72 hours of discovery of the graffiti and before removing or covering such graffiti. (Ord. 6713 §1, 2006).

9.65.070 Abatement of graffiti. Every owner or occupant of a property defaced by graffiti shall abate, meaning remove or cover, such graffiti after meeting the requirements of s. 9.65.060 above and the issuance of an order to abate from the city of Eau Claire police department. The order shall be delivered to the owner or occupant personally, posted at the property, or sent by certified mail. (Ord. 6713 §1, 2006).

9.65.080 Failure to abate--Public nuisance. Failure of the owner or occupant of the property to abate the graffiti may further be governed by the provisions of s. 9.36.010 C. 1. and 2. (Ord. 6713 §1, 2006).

9.65.090 Other methods not excluded. The provisions of this chapter are not exclusive and may be used in combination with each other or with any other section of this code or state statute applicable to this subject matter. (Ord. 6713 §1, 2006).

9.65.100 Violation--Penalty. Any person or corporation violating the provisions of this chapter shall, upon conviction, be fined in a sum or not less than five dollars and not more than one hundred dollars per day of violation, if applicable, with the costs of prosecution. (Ord. 6713 §1, 2006).

Chapter 9.68

INJURING PROPERTY--SIDEWALKS

Sections:

9.68.010 Wells or other city property.
9.68.020 Buildings, fences and other property.
9.68.030 Enforcing penalty.
9.68.040 Spitting on sidewalks.
9.68.050 Defacing sidewalks.
9.68.060 Violation--Penalty.

9.68.010 Wells or other city property. If any person or persons abuses, injures, beforces or corrupts any of the public wells, cisterns or other public or private property belonging to the city, or any individual, he, she or they so offending shall on conviction thereof be fined in a sum not exceeding one hundred dollars and costs of prosecution. (Prior code §20.26).

9.68.020 Buildings, fences and other property. Every person who, within the city, willfully, maliciously or wantonly injures or damages any church or place of worship, edifice, college, seminary, school house, market house or other house or building or any of the fixtures belonging thereto or breaks the glass of any street lamp, windows or skylight, or extinguishes any lamp, or destroys, removes, throws down or injures any fence of other enclosure on land belonging to or occupied by another, or interferes with any gate or bars in any such enclosure or who enters thereon and dumps or places on such land any substance or material without the consent of the owner of the land, or destroys, injures or carries away any tree or plant, or tears down, mutilates, defaces or injures any building, signboard, fence or railing being the property of another, or who willfully, maliciously, or wantonly injures, destroys or removes any ornamental or useful tree or plant of any kind, vase, statue, arbor, stand or other building or other guidepost, or who willfully, maliciously or wantonly injures, defaces or destroys any property not his own, whether real or personal, or whether belonging to any private person or to any private or public corporation shall, upon being convicted of a violation of any of the provisions of this section, be punished by a fine of not less than one dollar nor more than one hundred dollars with the costs of prosecution. (Prior code §20.27).

9.68.030 Enforcing penalty. In all cases of conviction for the violation of any of the provisions of Sections 9.68.010 and 9.68.020, if the defendant neglects or refuses to pay the fine and costs imposed, the court shall enter a judgment that the defendant be imprisoned in the county jail for a term not exceeding three months, unless said fine and costs and expenses of prosecution are sooner paid. (Prior code §20.29(part)).

9.68.040 Spitting on sidewalks. No person shall spit, expectorate or deposit any sputum, spittle, saliva, phlegm, mucus, tobacco juice or wads of tobacco upon the floors or stairways or any part of a public hall or building, upon the floor or any part of a railroad car or street car, or any other public conveyance, or upon the sidewalks of any public street, avenue or highway in the city. (Prior code §20.30).

9.68.050 Defacing sidewalks. It is unlawful for any person to write, print or paint any sign, advertisement or other matter on any sidewalk on any of the public streets or highways in the city. (Prior code §20.31).

9.68.060 Violation--Penalty. Any person violating any of the provisions of Sections 9.68.040 and 9.68.050 shall, upon conviction thereof, forfeit not less than one dollar nor more than ten dollars, together with the costs of prosecution and, in default of payment of such forfeiture and costs of prosecution, shall be imprisoned in the county jail for Eau Claire County for not to exceed ten days, unless such forfeiture and costs of prosecution are paid sooner. (Prior code §20.32).

Chapter 9.72

BILL POSTING--HANDBILLS

Sections:

9.72.010 Bill posting.
9.72.020 Distributing advertisements.
9.72.030 Violation--Penalty.

9.72.010 Bill posting. A. No person shall paste, paint, print, nail or otherwise fasten any handbill, sign, poster, advertisement or notice of any kind whatsoever, or cause the same to be done on any curbstone, flagstone, or any other portion or part of any sidewalk or street, or upon any tree, lamppost, hitching post, telegraph, telephone or lighting pole, hydrant, bridge, pier, or upon any fence or structure on the boundary of or within the limits of any street in the city except such as may be required by the ordinances of the city and the laws of the state, or cause the same to be done upon any private wall, window, door, gate, fence, or upon any other private structure without the consent of the owner of such wall, window, door, fence, gate, advertising board or sign, or other private building or structure.

B. This ordinance shall not apply to notices, warnings or other communications by, or on behalf of, city departments. (Ord. 5860, 1998; prior code §20.33).

9.72.020 Distributing advertisements. No person shall distribute advertisements of any nature, except newspapers and periodical publications, to pedestrians in, or place or fix any such advertisement in or upon any vehicle situated upon, any public street within the city. (Prior code §20.34).

9.72.030 Violation--Penalty. Any person who violates Sections 9.72.010--9.72.020 shall upon conviction thereof, for each such violation, be punished by a fine of not less than one dollar nor more than twenty-five dollars besides the costs of prosecution, or in default of payment of such fine and costs, by imprisonment in the county jail of Eau Claire County for not to exceed five days, unless such fine and costs are paid sooner. (Ord. 4072 §6, 1980; Prior code §20.35).

Chapter 9.74

CAMPING

Sections:

9.74.010 Purpose.
9.74.020 Definitions.
9.74.030 Camping on city property.
9.74.040 Penalty.

9.74.010 Purpose. The city council finds that from time to time persons establish campsites, for the purpose of maintaining a temporary place to live, on sidewalks, public rights-of-way, under bridges, and so forth. Such actions create unsafe and unsanitary living situations which pose a threat to the peace, health or safety of those persons and other citizens of the city. Further, such actions interfere with the rights of others to use those areas for the purposes for which they were intended. (Ord. 5570, 1996).

9.74.020 Definitions. In this chapter, the following terms shall mean:

A. "To camp" or "camping" means to set up or to remain in or at a campsite.

B. "Campsite" means any place where any bedding, sleeping bag or other sleeping matter is placed, established or maintained, whether or not such place incorporates the use of any tent, lean-to, shack or any other structure, or any vehicle or part thereof.

C. "City property" means any property which is owned or leased by the city of Eau Claire, including property in which the city of Eau Claire is a land contract vendee, and all municipal easements. (Ord. 5570, 1996).

9.74.030 Camping on city property. It is unlawful for any person to camp in or upon any city property, except pursuant to s. 9.76.130, or by declaration by the city manager or city council in emergency or other special circumstances. This shall not be deemed to prohibit camping at designated campsites. (Ord. 5570, 1996).

9.74.040 Penalty. Any person violating any provision of this chapter shall, upon conviction, be subject to a forfeiture of not less than $50 nor more than $500 for each offense, and upon failure to pay the same shall be confined in the county jail for not more than 30 days. (Ord. 5570, 1996).

Chapter 9.76

PARKS--PUBLIC GROUNDS

Sections:

9.76.010 Driving restrictions.
9.76.020 One-way drives--Designations.
9.76.030 One-way drives--Putnam Drive.
9.76.040 Speed limits.
9.76.050 Traffic signs.
9.76.055 Skateboards, roller skates, roller skis, in-line skates, motor scooters, or similar equipment.
9.76.060 Loitering--Half Moon Beach.
9.76.070 Defacing or removing property.
9.76.080 Parks--Waste containers.
9.76.090 Parks--Ball games.
9.76.100 Parks--Commercial enterprises.
9.76.110 Parks—Fire and Hazardous activities prohibited.
9.76.120 Parks--Wildlife.
9.76.130 Parks--Camping.
9.76.140 Parks--Swimming.
9.76.150 Parks--Dogs and horses.
9.76.151 Dog Park Use.
9.76.165 Parks--Intoxicants.
9.76.167 Parks--Hours.
9.76.170 Parks--Assemblies.
9.76.175 City swimming pool--Presence after hours.

9.76.180 Penalties for violation of Sections 9.76.010 through 9.76.175.
9.76.200 Penalty for violation of Section 9.76.190.
9.76.210 Motorized equipment regulations.
9.76.220 Unauthorized presence in school property prohibited.
9.76.230 Public art regulations.

9.76.010 Driving restrictions. A. Except as otherwise provided in this chapter, it is unlawful for any person to use the drives, avenues and other public ways in the public cemeteries of the city for any purpose except for walking, riding, or driving over and along the same in connection with and as a part of the usual and customary use of such cemeteries or service thereto, and such drives, avenues, streets and public ways of such cemeteries shall not be used as thoroughfares for other foot or vehicular travel through or across the same. Through commercial vehicular traffic on park roads is prohibited.

B. Buffington Drive may, however, be used as a thoroughfare and the maximum speed limit thereon is fixed at twenty-five miles per hour. (Ord. 3336 §II, 1973; prior code §13.04 (a)).

9.76.020 One-way drives--Designations. The chief of police may designate any drives or thoroughfares in any park or cemetery in the city for one-way traffic. (Prior code §13.07).

9.76.030 One-way drives--Putnam Drive. Putnam Drive traffic shall be from west to east only, beginning on the west, at the bridge over Little Niagara Creek and ending at the west line of the SE ¼ of the SW ¼ of Section 21, Township 27, Range 9. (Prior code §13.04(d)).

9.76.040 Speed limits. A. Except as otherwise provided in this chapter, the speed of any vehicle upon the highways, as defined in Section 10.04.020 in the parks and public cemeteries in the city shall not be in excess of fifteen miles per hour.

B. Upon the main highway in Carson Park, extending from the east end of the causeway and to its terminus at Menomonie Street, the maximum speed shall be twenty miles per hour.

C. Upon Putnam Drive within the limits of Putnam Park, the maximum speed shall be fifteen miles per hour.

D. Upon Mount Simon Park Drive, within the limits of Mount Simon Park, the maximum speed shall be 20 miles per hour. (Ord. 5760, 1997; Ord. 3466, 1974; prior code §13.04(b), (c)).

9.76.050 Traffic signs. Appropriate signs indicating such speeds and one-way traffic shall be erected on said highways at reasonable intervals. (Prior code §13.04(e)).

9.76.055 Skateboards, roller skates, roller skis, in-line skates, motor scooters, or similar equipment. A. It shall be lawful for any person to operate or ride a skateboard, roller skates, roller skis, in-line skates, motor scooter, or similar equipment on the roads, sidewalks and parking lots within Carson Park with the exception of Carson Park Drive and the rampways, sidewalks and stairs that form the entryways to the Carson Park baseball and football stadiums.

B. Operators and riders of the aforesaid equipment shall yield the right of way to other pedestrians and motor vehicles using the roads, sidewalks and parking lots within Carson Park and shall not otherwise endanger or interfere with normal pedestrian or vehicular traffic upon those areas.

C. Operators and riders of the aforesaid equipment shall obey the requirements of §346.80, Wis. Stats., "Riding bicycle or electric personal assistive mobility device on roadway," while riding upon the roads within Carson Park. (Ord. 6438 §2, 2003; Ord. 5745 §1, 1997).

9.76.060 Loitering--Half Moon Beach. No person, except authorized persons, shall stand, sit, loiter in, or occupy any part of the Half Moon Beach area or the Half Moon Beach area parking lot in the city between the hours of ten p.m. and six a.m. (Ord. 3149 §I, 1970; Prior code §13.05).

9.76.070 Defacing or removing property. No person shall destroy, mutilate, injure, carry away or remove any building, fountain or other structure, fence railing, wall, monument, grave stone, tree, shrub, plant or flower within any park, cemetery or public grounds. (Prior code §13.06).

9.76.080 Parks--Waste containers. No person shall place or deposit any garbage, trash, rubbish, or other waste in any park or public waters in the city except in containers provided for the purpose. (Ord. 3336 §I(part), 1973; Prior code §13.055(a)).

9.76.090 Parks--Ball games. No person shall engage in baseball, football, softball, violent or rough games, or play in any park except in appropriate areas designated therefor by the director of community services. (Ord. 7202, 2016; Ord. 3336 §I(part), 1973; Prior code §13.055(b)).

9.76.100 Parks--Commercial enterprises. A. No person shall sell or offer for sale any article, thing, privilege or service in any park without prior permission of the city council or without the issuance of special events permit approved by the director of community services and as necessary the chief of police or the designee of that person. Such sales shall include the charging of an admission or entry fee for the participation or inclusion in a special event. A special event held in Haymarket Plaza or utilizing Haymarket Plaza as part of a Special Event shall not charge an admission or entry fee for participation or inclusion in the special event. This section shall not apply to mobile food establishments licensed in accordance with section 13.12.066 of this code.

B. No person shall sell, barter, exchange, offer for sale, have in possession with intent to sell, deal or traffic in any fermented malt beverage, as defined in Wisconsin Statutes, Section 125.02(6), in a park, under any circumstances for which a "single event" or temporary Class B fermented malt beverage license is required under Wisconsin Statutes Ch. 125.26 (6), except as provided herein.

C. Such temporary license may be granted only for public celebrations or events authorized or sponsored by the city, and only to groups or organizations qualified to hold such license in accordance with state law and local ordinance, subject to the following:

1. If not issued administratively in conjunction with a special event, no such license shall be issued hereunder without a recommendation thereon having first been filed by the director of community services and the chief of police or their designee;

2. No such license shall be issued for any park other than Jeffers Park, Carson Park, Lower Mount Simon Park, Riverview Park, Rod and Gun Park, or the Phoenix Park pavilion; and

3. The licensee shall comply with all terms and conditions imposed upon the issuance of the license.

D. Such temporary license may be issued by the director of community services and the chief of police or their designee if an event is approved in accordance with the administrative approval process in s. 9.59.030.B. All other such licenses shall be approved and issued by the city council. (Ord. 7303, §3 2018; Ord. 7202, 2016; Ord. 7180, 2016; Ord. 7161 §2, 2015; Ord. 4044 §1, 1980).

9.76.110 Parks--Fire and Hazardous activities prohibited. A. The following special rules and regulations are in addition to other regulations in this code and any rules established by the director of community services to govern conduct and maintain public safety and enjoyment of city parks, playgrounds, public green space, trails and pools.

B. No person shall engage in any of the following, except in designated areas and when appropriate in conformity with such safety conditions established by the director of community services or, for special events, in conformity with Ch. 9.59, a safety plan, and such other special conditions as may be approved for that special event by the city council,~~;~~ or the director of community services and as required the chief of police or the fire chief or the designee of that person;

1. Ignite or maintain a fire or open flame except if fully contained in metal grills in picnic areas or fire rings installed by the City;

2. Fly or operate a model engine-powered airplane, drone, or other radio or remote controlled device;

3. Shoot or discharge an air rifle, firearm, bow, paint ball gun, air soft gun, or other like device, except as a lawful act of self-defense;

4. Hit a hard ball, such as a baseball or golf ball, except in a ball field, driving range, or grounds specifically established for such purpose; and

5. Operate or park a motorized vehicle on any park land unless designated as a park

drive, roadway, parking area or temporary parking area. A temporary parking area may be established by the director of community services and designated by signs. (Ord. 7202, 2016; Ord. 7161 §2, 2015; Ord. 7051, 2013; Ord. 3336 §I(part), 1973: Prior code §13.055(d)).

9.76.120 Parks--Wildlife. No person shall kill, injure, harm, worry or trap any fur-bearing animal, snake, frog, toad or bird, including water fowl, in any park or within Half Moon Lake or any other navigable water within the city, or destroy, injure or harm the dens, nest or nest contents of said creatures. This section shall not apply to any such activity when undertaken by, or with the permission of, the director of community services solely for the necessary and proper management of game and wildlife or to protect the parks or other property. (Ord. 7202, 2016; Ord. 3730, 1977; Ord. 3336 §I(part), 1973; Prior code §13.055(e)).

9.76.130 Parks--Camping. No person shall establish or maintain any temporary or permanent camp or other lodging place in any park except by prior permission of the city council or the director of community services and as necessary the chief of police or the designee of that person or via special events approval in accordance with Ch. 9.59 (Ord. 7202, 2016; Ord. 7161 §2, 2015; Ord. 3336 §I(part), 1973; Prior code §13.055(f)).

9.76.140 Parks--Swimming. No person shall swim in any area other than those designated as public swimming areas and only during such hours as specified. (Ord. 3336 §I(part), 1973; Prior code §13.055(g)).

9.76.150 Parks--Dogs and horses. Dogs shall be restrained at all times and shall not be permitted to run at large. Horses shall be permitted only on roadways or pathways in parks designated by the director of community services for such purpose. (Ord. 7202, 2016; Ord. 3336 §I(part), 1973; Prior code §13.055(h)).

9.76.151 Dog Park Use. An owner or person in control of a dog using a City dog park shall purchase a pass prior to the dog's use at an amount established in the Fee and License Schedule. (Ord. 7303, §1 2018)

9.76.165 Parks--Intoxicants. A. No person shall possess or consume any fermented malt beverage, wine, or intoxicating liquor, as those beverages are defined in Section 125.02 of the Wisconsin Statutes, in any park or city-owned green space, except said beverages shall be permitted in limited specified circumstances in Carson Park, Lower Mount Simon Park, Riverview Park, Jeffers Park, Haymarket Plaza, or Rod and Gun Park pursuant to this section or through a special events permit issued in accordance with Ch. 9.59. The city council may, by resolution, limit or prohibit the possession or consumption of fermented malt beverages, wine, or intoxicating liquor within all or any part of Carson Park, Lower Mount Simon Park, Riverview Park, Jeffers Park, Haymarket Plaza, or Rod and Gun Park during such times as are specified by the council.

B. A person may possess or consume fermented malt beverages or wine in Carson Park, Lower Mount Simon Park, Riverview Park, or Rod and Gun Park. No person shall possess any receptacle containing a fermented malt beverage or wine in excess of 48 ounces in volume total or for a group of persons not more than 48 ounces in volume per person present in the group. The total volume possessed by a group shall not in any event exceed 2 half barrels or its volume equivalent in smaller receptacles without first securing a special events permit in accordance with Ch. 9.59.

C. 1. A person may possess or consume any fermented malt beverage, wine, or intoxicating liquor in Phoenix Park, only within the amphitheater or pavilion, and only during times when an event is occurring that has been approved by city council or the director of community services or the designee of that person in accordance with Ch. 9.59. No person may possess any receptacle containing a fermented malt beverage, wine or intoxicating liquor in excess of 48 ounces within the amphitheater or pavilion in Phoenix Park.

2. A person may possess or consume any fermented malt beverage, wine or intoxicating liquor in the Phoenix Park pavilion if a license is issued under s. 9.76.100 or if a special events permit is issued in accordance with Ch. 9.59.

3. Possession of said intoxicants shall be further limited to the hours of 11:00 a.m. to sunset

or 8:00 p.m., whichever is later, unless otherwise approved by city council in accordance with Ch. 9.59.

D. Notwithstanding the above provisions, intoxicating liquors and wine shall be prohibited and fermented malt beverages shall only be permitted in Jeffers Park by approved special events permit in accordance with Ch. 9.59.

E. Notwithstanding the above provisions, intoxicating liquors shall be prohibited and fermented malt beverages and wine shall only be permitted in Haymarket Plaza by approved special events permit in accordance with Ch. 9.59. (Ord. 7303, §2 2018; Ord. 7202, 2016; Ord. 7161 §2, 2015; Ord. 6755 §1, 2007; Ord. 5345, 1993; Ord. 5263, 1992; Ord. 4627 §5, 1986; Ord. 4404 §2, 1980; Ord. 3769, 1977).

9.76.167 Parks--Hours. All parks, including all parking lots and park drives therein, excepting public streets, shall remain open daily to the public only between the hours of four a.m. and eleven p.m. of each day, and the director of community services is authorized to post appropriate signs giving notice thereof. It is unlawful for any person, other than city personnel conducting city business therein, to occupy or be present in a park during the hours the park is not open to the public. Such prohibition shall not apply to athletic facilities, regularly scheduled athletic events authorized and approved by the director of community services, or to public celebrations or special events approved in accordance with Ch. 9.59 or otherwise authorized or sponsored by the city. (Ord. 7202, 2016; Ord. 7161 §2, 2015; Ord. 4044 §3, 1980).

9.76.170 Parks—Assemblies. No person shall in any park, conduct himself in such a manner so that the peace and tranquility of others is disturbed due to unreasonable and excessive noise. The director of community services shall be notified a reasonable period of time in advance by a representative of any group of more than one hundred persons preparing to assemble in any park, subject to Ch. 9.59 and Ch. 9.60, as applicable. (Ord. 7202, 2016; Ord. 7161 §2, 2015; Ord. 3336 §I(part), 1973; Prior code §13.055(j)).

9.76.175 City swimming pool--Presence after hours. It shall be unlawful for any person to occupy or be present in the enclosed pool areas of the city swimming pool site during the hours that the facility is closed. Such prohibition does not apply to city employees engaged in city business or to other persons who have the approval of the director of community services, the pool manager or those persons' designee. (Ord. 7202, 2016; Ord. 5136 §1, 1991).

9.76.180 Penalties for violation of Sections 9.76.010 through 9.76.175. Any person violating any of the provisions of Sections 9.76.010 through 9.76.175 shall, upon conviction, forfeit not less than $20 nor more than $500, together with the costs of prosecution, and in default of payment of such forfeiture and costs of prosecution, shall be imprisoned in the county jail for Eau Claire County until said forfeiture and costs are paid, but not to exceed ninety days. (Ord. 5136 §2, 1991; Prior code §13.071).

9.76.210 Motorized equipment regulations. In all parks, cemeteries and other public lands and facilities, all motor vehicles, including motorcycles, motor-driven cycles and motor bicycles, shall be operated only upon the roadway or in other areas therein specifically designated for such operation by the city official in charge of such public land and facility and such operation shall be in compliance with appropriate regulations established by said official for such operation, and no person shall operate such vehicle in a manner as to create unreasonable or excessive noise or as to cause injury or damage to the public land or facility. Any person who violates this section shall, upon conviction thereof, forfeit not less than five dollars nor more than one hundred dollars, together with the costs of prosecution. (Ord. 4072 §7, 1980; Ord. 3336 §III, 1973; Prior code §13.074).

9.76.220 Unauthorized presence on school property prohibited. It is unlawful for any student who is enrolled in a school under the jurisdiction of the Eau Claire Area School District, or for any person, not an employee of the Eau Claire Area School District, or a parent or a guardian of a student enrolled, or not an otherwise authorized person to remain, loiter, or idle during scheduled school hours within any school building or upon any school grounds under the jurisdiction of the Eau

Claire Area School District without having first secured authorization to be there from the principal or other person in charge of the school buildings or school grounds, except while in direct route to secure the authorization. "Authorized person" includes any person who is present at any school building or any school grounds for any purpose authorized by the Board of Education or its designee. (Ord. 4063 §2, 1980).

9.76.230 Public art regulations. Public art consists of those displays of art installed on or within a city park or green space, or other city-owned real property as may be permitted in accordance with this section. The City of Eau Claire recognizes the contribution public art can make to the culture, well-being, and enjoyment of the community. The provisions within this ordinance will assist the City in the review of requests to place art in public spaces. Public art permits may be granted by the city council for a period of up to three years, and may be eligible for additional three year renewals. Public art shall not include art, graffiti abatement, way-finding, or other public works or installations by the city. Public art shall not include expressive speech protected by the First Amendment to the United States Constitution and nothing in this chapter is intended to convert any public property into a forum for protected speech.

A. Applications for public art shall be in a form prescribed by the city clerk, shall be subject to prior approval by city council and shall only be granted upon and subject to the conditions described herein.

1. Location Restrictions. Public art shall not:

a. be affixed or attached in any way to a landmarked building or structure or a building or structure that is on or eligible for the National Register of Historic Places.

b. be permitted on masonry or natural stone surfaces through the application of paint or other like materials.

c. interfere with or otherwise deter existing or intended future park, green space or city-owned real property uses, operations or maintenance, as shall be determined by the director of community services and director of engineering, or their designees, as necessary.

d. be permitted within the grounds of any city cemetery, memorial or tribute space or other similar location.

e. be located on or within any detention pond or similar environmental facility, unless approved by the director of engineering or his or her designee.

f. impede growth of landscaping, native plants or neighborhood gardens and shall abide by the city's planting guidelines, on file with the city forester.

g. inhibit access to the property or parcel on which it is located.

h. be permitted on parcels of land declared by the city council to be excess property unless the public art is temporary in nature, shall not cause damage of any kind to the property and shall be removed within 30 days of installation or sooner as may be required by the city.

i. be located within ten feet of any curb ramp or the edge of any trail, path or other similar location.

j. restrict any line of sight or vision triangle for vehicular traffic or otherwise reduce public safety as shall be determined by the director of engineering or his or her designee.

k. be designed to draw vehicle operators, pedestrians or cyclists into portions of the right-of-way not intended for their specific use.

l. be located on any trail, path or other similar location.

2. If public art is intended for application on the side of a building or on a sidewalk or other paved surface as a mural or other similar display, in addition to all other applicable restrictions in this chapter:

a. it shall consist of either chalk or paint and as necessary contain a non-slip additive, both of which shall be subject to approval by the director of engineering or his or her designee.

b. it shall not create a multi-dimensional effect or optical illusion on any surface intended for use by pedestrians.

c. it shall not interfere with the purpose or function of the pavement or building, as shall be determined by the director of engineering or director of community services, or their designees, as necessary.

d. if located on a surface intended for use by pedestrians, shall be located only where there is a minimum surface width of ten feet and shall leave a minimum of four feet of clearance, if intended for interaction or entertainment.

e. it shall be repainted or reapplied within 60 days of written notice by the city, at applicant's sole expense.

3. Public art may be permitted within the interior of any building, pavilion, shelter, other structure, or structured use area subject to City approval.

4. Public art shall not reduce public safety as shall be determined by the chief of police and fire chief or their designees, as necessary.

5. Public art shall not contain obscenity.

6. Public art shall not imitate traffic signs, symbols or signals in any form, or include other text, numerals or symbols that may distract vehicle operators if public art is visible from the right-of-way.

7. Public art shall not consist of advertising, which shall consist of the promotion of any business, product, event or other similar thing.

8. Public art shall not, at any time, constitute a public nuisance.

9. Public art shall comply with all other provisions in the city code of ordinances.

10. The duration of any park, green space, or other property closure requested by the applicant for installation of art shall be subject to approval by the director community services, or his or her designee, as necessary.

B. The following conditions shall be applied in the case of public art approved by city council:

1. The applicant shall furnish proof that sufficient and proper public liability insurance is carried, in a minimum amount of $1,000,000, which shall name the city as an additional insured and shall afford adequate protection to the city in connection with the public art;

2. The city may remove, alter, reconstruct or relocate of any public art, or require the applicant to do so, as it may deem necessary at any time and at the applicant's sole expense; and

3. Applicants shall execute waivers or agreements in favor of the city exonerating it from any liability for damages connected with the use of public art, or caused by construction, operation or maintenance of such public art. (Ord. 7243, 2017)

Chapter 9.77

FRAUD ON RESIDENTIAL LANDLORDS

Sections:

9.77.010 Unlawful acts.
9.77.020 Applicability.
9.77.030 Penalty.

9.77.010 Unlawful acts. Any tenant who, with intent to defraud, commits either of the following acts, shall be penalized as provided in section 9.77.030:

A. Intentionally absconds without paying rent that has been contractually agreed upon in an oral or written lease with a landlord. Prima facie evidence of intentionally absconding will be established if a tenant fails to pay rent due prior to the vacating of the rental premise by the tenant, and the non-payment of said rent continues for a period of 5 days after vacation of the premise; or

B. Issues any check, money order or any other form of bank or monetary draft as a payment of rent, where such document lacks sufficient funds, where the account is closed, or where such draft is unredeemable in any other form or fashion. (Ord. 4817 §1, 1988).

9.77.020 Applicability. This chapter shall apply to rental agreements between residential landlords and tenants only. The words and terms used in this chapter shall be defined and construed in conformity with the provisions of Chapter AG 134, Wisconsin Administrative Code, Chapter 704, Wisconsin Statutes, and Section 990.001(2) of the Wisconsin Statutes. (Ord. 4817 §2, 1988).

9.77.030 Penalty. Any person who violates any of the provisions of this chapter shall be subject to a forfeiture of not less than $25 nor more than $500, plus the costs of prosecution, and in default of the payment thereof, shall be imprisoned in the county jail until such forfeitures and costs are paid, but not to exceed a term of 30 days. (Ord. 4817 §3, 1988).

Chapter 9.78

OBTAINING UTILITY SERVICE BY FRAUD

Sections:

9.78.010 Unlawful acts designated.
9.78.020 Applicability.
9.78.030 Penalty.

9.78.010 Unlawful acts designated. Whoever, with intent to defraud, obtains or attempts to obtain telecommunication service, cable television service, gas service, sewer service or water service by any of the following means may be penalized as provided in Section 9.78.030:

A. Rearranging, tampering with or making connections with any facilities or equipment;

B. Using any contrivance, device or means to avoid payment of the lawful charges, in whole or in part, for such service;

C. Charging such service to an existing subscriber without the consent of the subscriber thereto, or the legitimate holder thereof. (Ord. 3552 (part), 1975).

9.78.020 Applicability. This chapter shall apply when the said services either originate or terminate, or both, in this city, or when the charges for said services would have been billable, in normal course, by a person providing the said services in this city but for the fact said services were obtained, or attempted to be obtained, by one or more of the means set forth in Section 9.78.010 above. (Ord. 3552 (part), 1975).

9.78.030 Penalty. Violators of this chapter shall be subject to a fine of not less than twenty dollars and the costs of the action and not more than one hundred dollars and the costs of the action for the first offense; and not less than twenty dollars and the costs of the action and not more than two hundred dollars and the costs of the action for each and every subsequent offense; and in the event of failure to pay such costs and fines, the violator shall be committed to the county jail for a period not to exceed thirty days or until such costs and fines are paid. (Ord. 3552 (part), 1975).

Chapter 9.79

TAXICABS AND MOTOR BUSES

Sections:

9.79.010 Failure to pay fare.

9.79.010 Failure to pay fare. Any person who engages a vehicle for hire, as contained in Chapter 5.54, or who boards a city transit bus or other motor bus for hire and fails to pay the required fare shall be subject to a forfeiture of not less than $25 nor more than $100. (Ord. 4553 §1, 1985).

VII. CONSUMER PROTECTION

Chapter 9.80

FALSE WEIGHTS AND MEASURES

Sections:

9.80.010 Prohibited.
9.80.020 Violation--Penalty.

9.80.010 Prohibited. A. No person shall sell, or offer for sale within the city any fruit, vegetables, berries, or grain of any description, or any article of dry measurement, or any ice, coal or any other goods, wares, merchandise, commodity or produce, without first having correctly weighed or measured the same, in the amount ordered or purchased by the buyer.

B. No person shall sell, offer for sale or give away within the city any measure or measures unless the same shall have been tested and sealed by the sealer of weights and measures. (Prior code §11.13).

9.80.020 Violation--Penalty. Any person who violates any of the provisions of this chapter, or who uses or has in his possession any false or condemned measure or measures, or any weighing machine which does not balance, or any measure or measures which have not been sealed within one year; or any person who sells or offers to sell any measure which has not been sealed by the sealer of weights and measures; or any person who is guilty of giving false or insufficient weight or measure of commodities, or of taking false or over weight or measure of commodities when in the custom of trade the buyer or his agent does the weighing or measuring, or of selling commodities in a manner contrary to law, shall, upon conviction thereof, be punished by a fine of not less than twenty dollars nor more than one hundred dollars for each offense, together with the costs of prosecution, and in default of payment of such fine and costs of prosecution, shall be imprisoned in the county jail for Eau Claire County for not to exceed three months, unless such fine and costs are sooner paid. The possession of any false, unsealed or condemned measure or measures or packages of false or insufficient weight or measure shall be prima facie evidence that the same was intended to be used or sold in violation of this act. The penalty imposed shall be in addition to any other liability imposed by law. (Prior code §11.14(a)).

Chapter 9.82

LIBRARY

Sections:

9.82.010 Theft of library material.
9.82.020 Failure to return library materials; removal of materials.
9.82.025 Unauthorized or fraudulent access to library services.
9.82.027 Unauthorized presence in library.
9.82.030 Penalty.

9.82.010 Theft of library material. A. In this chapter:

1. "Archives" means a place in which public or institutional records are systematically preserved.

2. "Library" means any public library; library of an educational, historical or eleemosynary institution, organization or society; archives; or museum.

3. "Library material" includes any book, plate, picture, photograph, engraving, painting, drawing, map, newspaper, magazine, microform, sound recording, audiovisual materials in any format, magnetic or other tapes, electronic data processing records, artifacts or other documentary, written or printed materials, regardless of physical form or characteristics, belonging to, on loan to or otherwise in the custody of a library.

B. Whoever intentionally takes and carries away, transfers, conceals or retains possession of any library material without the consent of a library official, agent or employee and with intent to deprive the library of possession of the material may be penalized as provided in Section 9.82.030.

C. The concealment of library material beyond the last station for borrowing library of possession of the material in a library is evidence of intent to deprive the library of possession of the material. The discovery of library material which has not been borrowed in accordance with the library's procedures or taken with consent of a library official, agent or employee and which is concealed upon the person or among the belongings of the person or concealed by a person upon the person or among the belongings of another is evidence of intentional concealment on the part of the person so concealing the material. (Ord. 4142 (part), 1980).

9.82.020 Failure to return library materials; removal of materials. A. No person shall fail, on demand, to return any library material belonging to or in the charge of the L. E. Phillips Memorial Public Library, (hereinafter referred to as library), or any of its branches according to the rules and regulations duly made and adopted by the library board, and no person shall remove from the library or any of its branches any library material without first having it charged as provided by such rules and regulations.

B. No person shall mar, deface, or in any other way damage or mutilate any library material belonging to or in the charge of the library, or any of its branches. (Ord. 4142 (part), 1980).

9.82.025 Unauthorized or fraudulent access to library services. Any person who is ineligible for a library card shall be prohibited from fraudulently using the library card of another person for the purpose of borrowing any library material or utilizing any library service, and no person possessing a valid library card shall permit its use for any such purpose. No person shall make or file any false statement or information for the purpose of fraudulently obtaining a library card. (Ord. 4329, 1983).

9.82.027 Unauthorized presence in library. No person who has been excluded by the library board from the use of the library pursuant to the provisions of s. 43.52(2), Wisconsin Statutes, or successor statute, may enter upon the library premises from which the person has been excluded during the period of exclusion. (Ord. 5577 §2, 1996).

9.82.030 Penalty. Any person convicted of a violation of the provisions of this chapter shall forfeit not more than three hundred dollars and the costs of prosecution, and in default of payment of such forfeiture and the costs of prosecution, shall be imprisoned in the County Jail until payment of such forfeiture and costs of prosecution are paid, but not for more than ninety days. Where there is more than one book, periodical, pamphlet, picture or other article or property involved in any violation, each such item shall constitute a separate offense. (Ord. 4142 (part), 1980).

VIII. OFFENSES BY OR AGAINST JUVENILES

Chapter 9.84

OFFENSES

Sections:

9.84.010 Hours prohibited in public.
9.84.040 Jurisdiction.
9.84.045 Truancy.
9.84.050 Alcohol beverages and juveniles.
9.84.055 Restrictions on purchase or possession of cigarettes or tobacco products.
9.84.060 Vandalism.
9.84.070 Loitering on school property.

9.84.080 Penalty.

<u>9.84.010 Hours prohibited in public</u>. A. Purpose. The city council recognizes that a significant amount of youth-perpetrated crimes occur within the city of Eau Claire during curfew hours. It is also recognized that many crimes against youth occur during curfew hours. This section is intended to protect the health, safety, and welfare of minors without impeding on their or their parents' fundamental rights.

B. Definitions. As used in this section:

1. "Minor" is anyone who is under seventeen (17) years of age who is not judicially emancipated or married.

2. "Public place" means any place to which the public has access and includes, but is not limited to, streets, highways, and the common areas of schools, hospitals, apartment houses, office buildings, transport facilities, malls, and shops.

3. "Business establishment" means any privately owned place of business to which the public is invited, including, but not limited to, any place of amusement or entertainment.

4. "Parent" refers to a natural parent, adoptive parent, stepparent, guardian, or any person who is at least eighteen (18) years of age and authorized by the parent or guardian to have care and custody of a minor.

5. "Curfew hours" are from 12:00 midnight to 5:00 a. m.

C. Offenses.

1. It shall be unlawful for a minor to remain in a public place, motor vehicle, or business establishment during curfew hours.

2. It shall be unlawful for any owner, operator, or employee of a business establishment to knowingly allow minors, unless accompanied by a parent as defined in this section or participating in an exempted activity, to remain in such establishment during curfew hours, unless the minor refuses to leave and the police are notified.

3. It shall be unlawful for any parent to knowingly, or by lack of reasonable supervision and control, allow a minor to remain in any public place or business establishment during curfew hours unless the activity is excepted below.

D. Exceptions to enforcement. The curfew does not apply in the following situations:

1. When a minor is accompanied by a parent;

2. When a minor is engaged in First Amendment activity protected by the United States Supreme Court or the Wisconsin Supreme Court;

3. When a minor is traveling to or from an activity related to the minor's employment;

4. When a minor is on direct route from any government or school function;

5. When a minor is on a sidewalk adjacent to the property where the minor resides; and

6. When a minor is involved in an emergency which involves the protection of a person or property from an imminent threat of serious bodily injury or substantial damage. (Ord. 6625, 2005; Ord. 5685 §2, 1997; Ord. 5154, 1991; Ord. 5033 §1, 1990; Prior code §20.10(a)).

<u>9.84.040 Jurisdiction</u>. The Eau Claire County Circuit Court--Children's Division shall have jurisdiction in proceedings against juveniles between the ages of 12 and 16 years for violations of this chapter or other violations of this code. In such cases, the citation procedures described in the Wisconsin Statutes Section 938.237 may be used. If a citation is issued to a juvenile, the issuing agency shall within seven days notify the juvenile's parent or guardian. The agency issuing a citation to a juvenile who is 12 to 15 years of age shall send a copy to an intake worker under Wisconsin Statutes Section 938.17(2)(c) for informational purposes only. If the court finds that a juvenile violated a municipal ordinance or civil law punishable by forfeiture, the court shall enter a dispositional order under Wisconsin Statutes Section 48.344, if applicable, or if that section does not apply, the court may enter any of the dispositional orders under Wisconsin Statutes Section 938.343. (Ord. 5685 §3, 1997; Ord. 5422 §1, 1994; Ord. 4485 §1, 1984; Ord. 4154 §1, 1981; Ord. 4127 §1, 1980; Ord. 4013 §1, 1979).

<u>9.84.045 Truancy</u>. No child under the age of 18 years who is subject to school attendance laws shall be truant as defined in this section.

A. Definitions. In this section:

1. Acceptable excuse means permission of the parent/guardian/legal custodian of a pupil, within limits of policies on truancy established by the school in which the pupil is enrolled. Except in emergencies or unforeseeable circumstances, such permission is expected to be communicated in writing from the parent/guardian/legal custodian to the school, prior to the absence. In emergencies or unforeseeable circumstances, such communication is expected to be as soon as practicable following the absence.

2. Truant means a pupil who is absent from school without an acceptable excuse under Wisconsin Statutes s. 118.15 and 118.16(4) for part or all of any day on which school is held during a school semester.

B. Penalties. Any child violating this section shall be subject to one or more of the penalties provided in subsections 1. and 2. below:

1. An order for the child to attend school;

2. A forfeiture of not more than $50.00 plus costs for a first violation, or a forfeiture of not more than $100.00 plus costs for a second or subsequent violation committed within 12 months of a previous violation, subject to Wisconsin Statutes s. 938.37, and subject to a maximum cumulative forfeiture amount of not more than $500.00 for all violations committed during a school semester.

C. Sanctions for violation of the court's order. If the court finds that a child violates a condition of his or her court order under this section, the court may impose as a sanction on the child, any combination of the following, if at the time of the order the court explained the conditions to the child and informed the child of those possible sanctions:

1. Suspend the child's operating privilege, as defined in Wis. Stat. §340.01(40), for not more than one year. If the child does not hold a valid operator's license under Wis. Stat. ch. 343, other than an instruction permit under Wis. Stat. §343.07 or a restricted license under Wis. Stat. §343.08, on the date of the order issued under this section, the court may order the suspension or limitation to begin on the date that the operator's license would otherwise be reinstated or issued after the child applies and qualifies for issuance, or 2 years after the date of the order issued under this section, whichever occurs first. If the court suspends the child's operating privilege or an approval issued under Wis. Stat. ch. 29, the court shall immediately take possession of the suspended license or approval and forward it to the department that issued the license or approval with a notice stating the reason for and the duration of the suspension.

2. An order for the child to participate in counseling or a supervised work program or other community service work as described in Wis. Stat. §938.34(5g).

3. An order for the child to remain at home except during hours in which the child is attending religious worship or a school program, including travel time required to get to and from
the school program or place of worship. The order may permit a child to leave his or her home if the child is accompanied by a parent or guardian.

4. An order for the child to attend an education program as described in Wis. Stat. §938.34(7d).

5. An order for the department of workforce development to revoke, under Wis. Stat. §103.72, a permit under Wis. Stat. §103.70, authorizing employment of the child.

6. An order for the child to be placed in a teen court program as described in Wis. Stat. §938.342(1g)(f).

7. An order for the child to attend school.

8. A forfeiture of not more than $500 plus costs, subject to Wis. Stat. §938.37.

9. Any other reasonable conditions consistent with this subsection, including a curfew, restrictions as to going to or remaining on specified premises, and restrictions on associating with other children or adults.

D. Parental liability. All or part of any forfeiture or costs assessed under this section may be assessed against the child, the child's parents, the child's guardian, or the child's legal custodian, or any combination thereof. Further, the court may order the child's parent, guardian, or legal custodian to participate in counseling at the parent's, guardian's, or legal custodian's own expense, or to attend school with the child, or both.

E. Contributing to truancy.

1. Except as provided in subsection 2., no person 17 years of age or older shall, by act or omission, knowingly encourage or contribute to the truancy of a person subject to school attendance laws.

2. Subsection 1. does not apply to a person who has under his or her control a child who has been sanctioned under Wis. Stat. §49.26(1)(h).

3. An act or omission contributes to a truancy of a child whether or not the child is adjudged to be in need of protection or services, if the natural and probable consequences of that act or omission would be to cause the child to be truant.

F. References to statutes. References to specific statutory sections, wherever used in this ordinance, shall mean the Wisconsin Statutes of 2000-2001 as from time to time amended, modified, repealed, or otherwise altered by state legislature.

G. Severability. If any section or part of this ordinance is adjudged unconstitutional or invalid by any court of competent jurisdiction, the remainder of this ordinance shall not be affected thereby. (Ord. 6213, 2001; Ord. 5896, 1998).

9.84.050 Alcohol beverages and juveniles. A. It is unlawful for any juvenile between the ages of 12 and 17 years, inclusive, to:

1. Procure or attempt to procure alcohol beverages
2. Knowingly possess or consume intoxicating liquor;
3. Enter or be present on any premise licensed under Chapter 125 of the Wisconsin Statues;
4. Falsely represent his or her age for the purpose of receiving alcohol beverages from a licensee or permittee;
5. Possess or consume fermented malt beverages when not accompanied by his or her parent, guardian or spouse who has attained the legal drinking age;
6. Violate any other applicable section of Chapter 125 of the Wisconsin Statutes.

B. Any violation of Section 9.84.050 shall be subject to the penalties provided in Section 938.344 of the Wisconsin Statutes. (Ord. 5685 §4, 1997; Ord. 5422 §2, 1994; Ord. 4485 §2, 1984; Ord. 4154 §2, 1981; Ord. 4127 §2, 1980; Ord. 4013 §2, 1979).

9.84.055 Restrictions on purchase or possession of cigarettes or tobacco products. Section 254.92 of the Wisconsin Statutes is adopted by reference and made a part of this chapter as if fully set forth herein. (Ord. 6162, 2001; Ord. 5835, 1998; Ord. 5289 §3, 1992; Ord. 5028, 1990).

9.84.060 Vandalism. No juvenile 12 years old or older shall intentionally cause damage to any physical property of another individual without that person's consent. (Ord. 5422 §3, 1994; Ord. 4127 §3, 1980; Ord. 4013 §3, 1979).

9.84.070 Loitering on school property. No juvenile 12 years old or older, after first being warned by a law enforcement officer or a school official, shall remain, loiter, or idle on public school grounds during scheduled school hours. This section shall not apply to students who have obtained special permission from school officials in accordance with the school's rules and regulations. (Ord. 5422 §4, 1994; Ord. 4127 §4, 1980; Ord. 4013 §4, 1979).

9.84.080 Penalty. Violators of Sections 9.84.010, 9.84.055, 9.84.060, 9.84.070 and 9.84.075 shall, upon conviction, forfeit an amount of $50.00. (Ord. 5422 §6, 1994; Ord. 5289 §4, 1992; Ord. 4485 §3, 1984; Ord. 4367 §3, 1983; Ord. 4072 §3, 1980).

IX. MISCELLANEOUS PROVISIONS

Chapter 9.88

EMERGENCY POWERS

Sections:

9.88.010 City manager--Emergency proclamation.
9.88.020 Proclamation--When effective.
9.88.030 Immediate emergency--Police power.
9.88.040 City council review.
9.88.050 Penalty.
9.88.060 Effect on other ordinances.

9.88.010 City manager--Emergency proclamation. Whenever, in the judgment of the city manager, or in the event of his absence or inability to act, the acting city manager, determined that an actual or imminent emergency exists by reason of war, conflagration, natural or manmade catastrophe or disaster, riot or civil commotion, including conditions, without limitation due to enumeration, which impair transportation, food or fuel supplies, medical care, fire, health or police protection or other vital services of the city, he may, by proclamation, do any or all of the following:

A. Impose a curfew upon all or any portion of the city, thereby requiring all persons in such designated curfew areas to remove themselves forthwith from the public streets, alleys, parks or other public places. Physicians, nurses and ambulance operators performing medical services, bona fide members of the news media, personnel of public utilities maintaining essential public services and firemen and city authorized or requested law enforcement officers and personnel may be exempted from such curfew;

B. Order the closing of any business establishments anywhere within the city for the period of the emergency, such as businesses to include, without limitation due to enumeration, those selling intoxicating liquor, fermented malt beverages, gasoline or firearms;

C. Declare any public street, thoroughfare or vehicle parking areas closed to vehicular or pedestrian traffic;

D. Call upon regular and auxiliary law enforcement agencies and organizations within or without the city to assist in preserving and keeping peace and order within the city.

E. Prohibit the kindling or maintaining of any outdoor fire, including the usage of outdoor grills, smoking as defined in s. 9.38.010 (intro. par.), or the discharge of those fireworks as described in s. 9.32.010, including those materials permitted therein under s. 9.32.010 A. through N., where such activity is found to be hazardous due to weather conditions or other similar circumstances. (Ord. 4840 §3, 1988; Ord. 3622 (part), 1976).

9.88.020 Proclamation--When effective. The proclamation of emergency under Section 9.88.010 shall be effective upon its issuance and dissemination to the public by appropriate news media or other means of informing the public, such as informing the group that is being affected by the order through use of a loudspeaker system. (Ord. 3622 (part), 1976).

9.88.030 Immediate emergency--Police power. If, because of the immediacy of an emergency, there is not time in which to contact the city manager or acting city manager, the chief of police or acting chief of police shall have the authority to take the steps enumerated in subsections A, B, C or D of Section 9.88.010, and shall, as soon as possible thereafter, contact the city manager or acting city manager. The city manager or acting city manager shall have power to ratify, alter, modify, or repeal any order given by the chief of police or acting chief of police, but such ratification, alteration, modification or repeal shall not affect the prior validity or force or effect of the proclamation of emergency by the chief of police or acting chief of police. (Ord. 3622 (part), 1976).

9.88.040 City council review. Such proclamation by the city manager or acting city manager shall be subject to ratification, alteration, modification or repeal by the city council as soon as the city council is able to meet, but such ratification, alteration, modification or repeal shall not affect the prior validity or force or effect of such proclamation or emergency by the city manager. Such proclamation of emergency shall be in effect until the city manager proclaims an emergency no longer exists or until the city council, by ordinance or resolution, declares such emergency no longer exists, whichever occurs first. (Ord. 3622 (part), 1976).

9.88.050 Penalty. Any person who willfully fails or refuses to comply with any lawful order or duly authorized law enforcement officers or personnel charged with the enforcement of such proclamation of emergency shall be subject to a forfeiture of not more than five hundred dollars for each offense. (Ord. 3622 (part), 1976).

9.88.060 Effect on other ordinances. The ordinance codified in this chapter shall supersede all other provisions of this code in conflict with this chapter. (Ord. 3622 (part), 1976).

Title 10

VEHICLES AND TRAFFIC

Chapters:

10.04 State Statutes Adopted
10.08 Bicycles
10.09 Motor Scooters
10.10 Neighborhood Electric Vehicles
10.12 Enforcement and Obedience to Traffic Control Signals
10.16 Grand Avenue Bridge Restrictions
10.20 Parking Meters and Lots
10.24 Special Parking Restrictions
10.30 Right Turns Prohibited at Signalized Intersections
10.32 Railroads and Trains
10.36 Snow Emergency Regulations
10.38 Alternate Side Parking
10.40 Miscellaneous Regulations
10.42 Abandoned Motor Vehicles
10.44 Penalties for Traffic Violations
10.48 Truck Traffic Regulations

Chapter 10.04

STATE STATUTES ADOPTED

Sections:

10.04.010 State traffic forfeiture laws adopted.
10.04.020 Specific sections adopted.
10.04.030 Snowmobiles--Obedience to traffic rules.
10.04.050 Incorporation by reference.
10.04.055 Traffic regulations--Annexed areas.

10.04.010 State traffic forfeiture laws adopted. Except as otherwise specifically provided in the ordinance codified herein, all provisions of Chapters 110 and 340 through 350 of the Wisconsin Statutes describing and defining regulations with respect to vehicles and traffic for which the penalty is a forfeiture only, including penalties to be imposed and procedure for prosecution, are adopted and by reference made a part of this chapter as if fully set forth herein. Any act required to be performed or prohibited by any statute incorporated herein by reference is required or prohibited by this chapter. (Ord. 4594 §1, 1985; Ord. 3313 §I(part), 1972; prior code §17.01(1)(part)).

10.04.020 Specific sections adopted. Sections of Chapters 110 and 340 through 350 adopted by reference shall include but not be limited to the following:

WORDS AND PHRASES

340.01 Words and Phrases Defined

REGISTRATION OF VEHICLES

341.11 (4) Display of Registration Plates
341.15 Display of Registration Plates
341.16 (4) Issuance of Duplicate Plates
341.42 (4) Reciprocity Permits
341.55 Penalty for Misuse of Plates
341.57 Registration of Finance Companies and Banks
341.63 When Registration is to be Suspended

VEHICLE TITLE AND ANTI-THEFT LAW

342.05 (4) Certificate of Title Required
342.15 (5), (6) and (7) Transfer of Interest in Vehicle
342.23 Secured Party's and Owner's Duties
342.30, 342.31, 342.34 Anti-theft and Anti-fraud Provisions

OPERATORS' LICENSES

343.01 Words and Phrases Defined
343.305 Implied Consent
343.35 Surrender of Licenses upon Cancellation, Revocation or Suspension
343.45 to 343.46 Unlawful Practices Relative to Licenses
343.60 to 343.72 Licensing of Driver Schools and Instructors
343.70 Penalty

FINANCIAL RESPONSIBILITY

344.01 Words and Phrases Defined
344.45 to 344.47 Penalties for Violation of Chapter
344.51 Financial Responsibility for Domestic Rented Vehicles

CIVIL AND CRIMINAL LIABILITY

345.01 Words and Phrases Defined
345.20 to 345.53 General Provisions in Traffic Forfeiture Actions
345.55 Traffic Officers not to Profit from Arrests

RULES OF THE ROAD

346.01 Words and Phrases Defined
346.02 Applicability of Chapter
346.03 Applicability of Rules of the Road to Authorized Emergency Vehicles
346.04 (1) and (2), 346.05 to 346.16 Driving, Meeting, Overtaking and Passing
346.17 Penalty for Violating ss. 346.04 to 346.16
346.18 to 346.21 Right-of-way
346.22 Penalty for Violating ss. 346.18 to 346.21
346.23 to 346.29 Drivers and Pedestrians
346.30 Penalty for Violating ss. 346.23 to 346.29
346.31 to 346.35 Turning and Stopping and Required Signals
346.36 Penalty for Violating ss. 346.31 to 346.35

346.37 to 346.42 Traffic Signs, Signals and Markings
346.37 (1)(c)3 Right Turns at Signal Intersections
346.43 Penalty for Violating ss. 346.37 to 346.42
346.44 to 346.48 Required Stops
346.49 Penalty for Violating ss. 346.44 to 346.48
346.50 to 346.55 Restrictions on Stopping and Parking
346.57 (2), (3) and (4)(a) to (c) Speed Restrictions - First Offense in a Year
346.57 (4)(d), (5) and (6) to 346.595 Speed Restrictions
346.60 Penalty for Violating ss. 346.57 to 346.595
346.61 Applicability of Sections Relating to Reckless and Drunken Driving
346.61 (1) and (3) Reckless Driving - First Offense in 4 Years
346.63 (1), (3) and (4) Operating Under Influence of Intoxicant - First Offense in 5 Years
346.64 Employment of Drunk Operators - First Offense in a Year
346.65 (1) and (2) Penalty for Violating ss. 346.62 to 346.64
346.66 Applicability of Sections Relating to Accident and Accident Reporting
346.68 and 346.69 Duty upon Striking Unattended Vehicle--Upon Striking Property on or Adjacent to Highway--First Offense Within a Year
346.70 (1), (2) or (3), 346.71, 346.72, 346.73 Duty to Report Accident, Etc.
346.70 (4) Police and Traffic Agencies to Report
346.70 (5) Falsifying Reports - First Offense Within a Year
346.77 to 346.805 Bicycles and Play Vehicles
346.82 Penalty for Violating ss. 346.77 to 346.805
346.87 to 346.94 Miscellaneous Rules
346.95 Penalty for Violating ss. 346.87 to 346.94

EQUIPMENT OF VEHICLES

110.075 Motor Vehicle Inspection (which shall include Chapter MVD5, Wisconsin Administrative Code)
347.01 to 347.05 General Provisions
347.06 to 347.29 Lighting Equipment
347.30 Penalty for Violating Lighting Equipment Requirements
347.35 to 347.49 Other Equipment
347.485 Protective headgear for motorcyclists
347.486 General requirements
347.487 Seating requirements
347.50 Penalty for Violating ss. 347.35 to 347.49

VEHICLES--SIZE, WEIGHT AND LOAD

348.01 to 348.02 Size, Weight, Load - General Provisions
348.05 to 348.10 Size and Load
348.11 Penalty for Violating Size and Load Limitations
348.15 to 348.20 Weight
348.21 Penalty for Violating Weight Limitations
348.25 to 348.27 Permits
348.28 Permits to be Carried - Penalty

SNOWMOBILES

350.01 Definitions
350.02 Operation of Snowmobiles on or in the Vicinity of a Highway
350.03 Right-of-way
350.04 Snowmobile Races, Derbies and Routes
350.045 Public Utility Exemption
350.047 Local Ordinance to be Filed

350.05 Operation by Youthful Operators Restricted
350.055 Safety Certification Program Established
350.06 Firearms and Bows
350.07 Driving Animals
350.08 Owner Permitting Operation
350.09 Head Lamps, Tail Lamps and Brakes
350.10 Miscellaneous Provisions for Snowmobile Operation
350.12 Registration of Snowmobiles
350.13 Uniform Trail Signs and Standards
350.15 Accident and Accident Reports
350.17 Enforcement
350.18 Local Ordinances
350.19 Liability of Land Owners

(Ord. 6438 §3, 2003; Ord. 4594 §2, 1985; Ord. 3913 §1, 1978; Ord. 3313 §I(part), 1972; Prior code §17.01(1)(part)).

10.04.030 Snowmobiles--Obedience to traffic rules. The operator of a snowmobile upon a roadway shall in addition to the provisions of Chapter 350 be subject to Sections 346.04, 346.06, 346.11, 346.14(1), 346.18, 346.19, 346.20, 346.21, 346.26, 346.27, 346.33, 346.35, 346.37, 346.39, 346.40, 346.44, 346.46, 346.47, 346.48, 346.50(1)(b), 346.51, 346.52, 346.53, 346.54, 346.55, 346.87, 346.88, 346.89, 346.90, 346.91, 346.91(1) and 346.94(1), (6), (6m) and (9). (Ord. 3313 §XX, 1972; Prior code §17.09(6)).

10.04.050 Incorporation by reference. A. The provisions of Chapters 110 and 340 through 348 of the Wisconsin Statutes shall be incorporated herein by reference, including all existing and future amendments made thereto, pursuant to authority granted by Section 349.06 (2) of the Wisconsin Statutes. The references to the provisions of Chapter 350 of the Wisconsin Statutes, incorporated herein by reference, shall mean the Wisconsin Statutes of 1975, as amended by the 1977 Legislature.

B. "Chapter" and "ordinance" as used herein are intended to be, and shall be, synonymous. (Ord. 4594 §3, 1985; Ord. 3878 §1, 1978; Ord. 3313 §XIX (part), 1972; prior code §§17.18 and 17.19).

10.04.055 Traffic regulations--Annexed areas. In any area that has been annexed to the city, including those areas annexed prior to the effective date of this section, all lawfully adopted and existing regulations of the town from which the area is annexed in effect as of the date of annexation are hereby adopted as city regulations to the extent that they have not been modified, superseded or repealed by the city. Said regulations shall continue in effect until the same are modified, superseded or repealed by the city. (Ord. 4668, 1986).

Chapter 10.08

BICYCLES

Sections:

10.08.010 Purpose.
10.08.020 Definitions.
10.08.090 Hours of operation--Age limit.
10.08.100 Parking.
10.08.110 Riding on sidewalks.
10.08.120 Designation of the bicycle way.

10.08.010 Purpose. The City strives to increase active living opportunities and provide healthy living options by encouraging bicycling for recreational and utilitarian use throughout the

City while promoting a safe environment for pedestrians that contributes to the quality of life in Eau Claire, sustainability of the environment, and health of all residents. (Ord. 7205, 2016)

10.08.020 Definitions. A. "Bicycle way" as defined in Wisconsin Statutes s.340.01(5s) is any path or portion thereof designated for use of bicycles and electric personal assistive mobility devices by the governing body of any city, town, village, or county or any other path or portion thereof defined in Wisconsin Statutes 84.60 (1) as a bikeway. The bicycle ways in Eau Claire consist of the City's off-street pathways set forth in 10.08.120.

B. "Public sidewalk" is any sidewalk located within the public right-of-way. (Ord. 7205, 2016)

10.08.090 Hours of operation--Age limit. No person under the age of twelve years shall operate a bicycle upon any public street, highway, boulevard, sidewalk or alley between the hours of nine p.m. and five a.m. (Ord. 4471, 1984; Ord. 3313 §XXII (part), 1972; prior code §17.10(j)).

10.08.100 Parking. A. Bicycles shall only be parked on a street curbface to curbface in a designated bicycle corral or similar designated location.

B. No person shall park a bicycle against the curb, upon the sidewalk, upon the sidewalk in a rack to support the bicycle, or against a building or at the curb, in such a manner as to obstruct normal pedestrian or vehicular traffic.

C. Bicycles shall not be parked adjacent to any bus stop, loading zone, or any parking place for persons experiencing disabilities so as to interfere with the loading or unloading of persons or property.

D. Bicycles parked in violation of this or any other parking regulation may be removed from the unlawful parking position by the director of community services or the chief of police or that person's designee. (Ord. 7321, §2, 2019; Ord. 4471, 1984; Ord. 3313 §XXII (part), 1972; prior code §17.10(j)).

10.08.110 Riding on sidewalks or the bicycle way. Bicycle riding on public sidewalks is allowed, except as follows: In an effort to protect public safety and enhance walkability in certain areas, the City has identified four districts where riding a bicycle on the public sidewalk along certain streets is prohibited. No person shall ride a bicycle upon a public sidewalk located along the following streets within the following areas.

1. Central Business District Area North of the Eau Claire River: The streets including Galloway Street and Wisconsin Street located to the west of Dewey Street; Barstow Street, Farwell Street, and Hobart Street all south of Madison Street; Dewey Street from Galloway Street to Madison Street and the north side of the 300 Block of Madison Street.

2. Central Business District Area from the Eau Claire River to the south. The streets including Farwell Street and Barstow Street and Graham Avenue from the north side of the Eau Claire River to Lake Street and Eau Claire Street, Gibson Street, East Grand Avenue, Main Street, and Gray Street between the Chippewa River and Dewey Street.

3. Water Street District: Both sides of Water Street from Second Avenue to Sixth Avenue, except the south side of Water Street from Second Avenue to Third Avenue; and both sides of Second Avenue, Third Avenue, Fourth Avenue, Fifth Avenue, and Sixth Avenue from Water Street north to the first alley.

4. Madison Street--Bellinger Street District: Both sides of Bellinger Street between Cameron Street and Randall Street.

A. Signs. The chief of police, the chief of police's designee, the director of community services or the director or community services designee is authorized to cause signs to be erected on any sidewalk or roadway prohibiting riding bicycles thereon by any person and when such signs are in place, no person shall disobey the same.

B. Right-of-way. Whenever any person is riding a bicycle upon a sidewalk or the bicycle way, such person shall yield the right-of-way to any pedestrian and shall give audible signal before overtaking and passing such pedestrian. (Ord. 7205, 2016; Ord. 5736 §2, 1997; Ord. 4583, 1985; Ord. 3473, 1974; Ord. 3313 §XXII (part), 1972; prior code §17.10(k)).

10.08.120 Designation of the bicycle way. A. The bicycle way within the City shall be those off-street pathways that are identified in the map titled "City of Eau Claire Off-Street Multi-use Pathways/Bicycle Way System" that is adopted as part of this ordinance and on file with the City Clerk's Office. It shall include those pathways identified as existing and shall include those identified as proposed at such time that these sections are constructed.

B. All motorized vehicles except authorized city vehicles and vehicles permitted by Wisconsin Statutes s.340.01(5s) are prohibited from using any portion of the bicycle way.

C. The chief of police, the chief of police's designee, the director of community services or the director or community services designee is authorized to cause signs to be erected designating the bicycle way and prohibiting the use of motorized vehicles. No person shall disobey any such sign. (Ord. 7205, 2016; Ord. 7202, 2016; Ord. 5736 §3, 1997).

Chapter 10.09

MOTOR SCOOTERS

Sections:

10.09.010 Definition.
10.09.020 Operating motor scooters.
10.09.030 Right of way.
10.09.040 Special rules applicable to motor scooters.
10.09.050 Signs.
10.09.060 Parking.
10.09.070 Responsibility of parent or guardian.

10.09.010 Definition. A motor scooter shall be defined as a play vehicle under Wisconsin Statutes section 340.01 (43m). A motor scooter shall mean a play vehicle such as a coaster, skateboard, or unicycle that is equipped with an engine that cannot propel the device more than 15 miles per hour, has a T bar for steering, and a deck for standing or seat for sitting. A motor scooter under this section does not meet federal safety standards to be operated on the highway. A motor scooter shall not include a vehicle that can be legally registered by the state of Wisconsin and operated on the highway, or a device defined as an electric personal assistive mobility device under Wisconsin Statutes section 340.01(15pm). (Ord. 6438 §1, 2003).

10.09.020 Operating motor scooters. Operation of a motor scooter is permitted on a sidewalk, except that no person shall operate a motor scooter:

A. On a highway, pursuant to Wisconsin Statutes section 346.78, except as provided in section 9.76.055 of this code.

B. On a sidewalk in prohibited areas designated in section 10.08.110 of this code.

C. In any public parking ramp or parking lot, except as provided in section 9.76.055 of this code.

D. On private property, unless permission has been received from the owner, lessee, or person in charge of that property.

E. On any public step, railing, wall, or any appurtenance to a public way.

F. On a bicycle way as designated in section 10.08.120 of this code.

G. On the Grand Avenue Bridge as provided in chapter 10.16 of this code. (Ord. 6438 §1, 2003).

10.09.030 Right of way. Whenever a person rides a motor scooter upon a sidewalk, such person shall yield the right-of-way to any pedestrian and shall exercise due care and shall give an audible signal before overtaking or passing a bicycle, an electric personal assistive mobility device, or a pedestrian proceeding in the same direction. (Ord. 6438 §1, 2003).

10.09.040 Special rules applicable to motor scooters. Whenever a motor scooter is operated on a sidewalk, the following rules apply:

A. No motor scooter shall be used to carry or transport more persons at one time than the number for which it is designated.

B. No person operating a motor scooter shall carry any package, bundle, or article which prevents the operator from keeping at least one hand upon the handle bars.

C. No person operating a motor scooter shall attach himself or herself or the motor scooter to any other motor scooter, bicycle, or motor vehicle. (Ord. 6438 §1, 2003).

10.09.050 Signs. Signs authorized under city of Eau Claire ordinance section 10.08.110 A. prohibiting bicycles shall apply to motor scooters. (Ord. 6438 §1, 2003).

10.09.060 Parking. No person shall park a motor scooter in such a way as to obstruct normal vehicle or pedestrian traffic. (Ord. 6438 §1, 2003).

10.09.070 Responsibility of parent or guardian. Pursuant to Wisconsin Statutes section 346.77, no parent or guardian shall authorize or knowingly permit a child operating a motor scooter to violate any provisions of this chapter. (Ord. 6438 §1, 2003).

Chapter 10.10

NEIGHBORHOOD ELECTRIC VEHICLES

Sections:

10.10.010 Purpose.
10.10.020 Definition.
10.10.030 Use permitted on city streets.
10.10.040 Permitted users.
10.10.050 Operation.
10.10.060 License.
10.10.070 Penalty.

10.10.010 Purpose. The city council finds that when operated according to state and local rules of the road, neighborhood electric vehicles are a reasonably safe form of transportation, compatible with other users of certain city streets with moderate speed limits. Therefore, by authority granted in s. 349.26, Wis. Stats., limited use of these vehicles is permitted as provided in this chapter. (Ord. 6776, 2007).

10.10.020 Definition. "Neighborhood electric vehicle" (NEV) shall have the same meaning as provided in Wisconsin Statutes s. 340.01(36r). (Ord. 6815 §1, 2008; Ord. 6776, 2007).

10.10.030 Use permitted on city streets. Any individual may operate an NEV on the streets and sections of streets lying entirely within of the city having a posted speed limit of 35 miles per hour or less. If vehicle specifications are less than 35 miles per hour, the applicant is required to place a slow moving vehicle sign on the vehicle. (Ord. 6776, 2007).

10.10.040 Permitted users. No person may operate an NEV on any street unless the person has a valid operator's license pursuant to Wisconsin Statutes s. 343.05. (Ord. 6815 §2, 2008; Ord. 6776, 2007).

10.10.050 Operation. The operation of an NEV as permitted herein shall comply in all respects with chapter 10 of the code of ordinances, as applicable to the operation of motor vehicles. (Ord. 6776, 2007).

10.10.060 License. An NEV shall be licensed by the state pursuant to Wisconsin Statutes s. 341.25. The license shall be displayed in the rear window of the NEV. If no rear window exists, the license shall be displayed in a clear plastic waterproof holder hung from the rear of the NEV top. (Ord. 6815 §3, 2008; Ord. 6776, 2007).

10.10.070 Penalty. Any person convicted of violating any of the provisions of this chapter shall forfeit not less than $50 nor more than $200, plus court and prosecution costs, and in default of such payment shall be imprisoned in the county jail until such forfeiture is paid, but not exceeding 90 days. (Ord. 6776, 2007).

Chapter 10.12

ENFORCEMENT AND OBEDIENCE TO TRAFFIC CONTROL SIGNALS

Sections:

10.12.010 Obedience to police.
10.12.020 Special regulations.
10.12.030 Public employees to obey traffic regulations.
10.12.040 Erection of signs and signals.
10.12.050 Removal of unofficial signs and signals.
10.12.060 Removal of unlawfully parked vehicles.

10.12.010 Obedience to police. It is unlawful for any person to refuse or fail to comply with any lawful order, signal or direction of a traffic officer. (Ord. 3313 §XXII (part), 1972; prior code §17.11(2)).

10.12.020 Special regulations. A. The director of engineering, the director of community services or the chief of police, or the designee of those persons, with the approval of the city manager, is authorized to, within the reasonable exercise of the police power, prohibit, make special regulations to limit the time of, or otherwise restrict the stopping, standing or parking of vehicles to the extent allowed by law.

B. Records and Notification. Such regulations shall be recorded in a record kept for that purpose by the department of engineering and the same shall be available during normal business hours for public inspection. The police department shall be notified of action taken by the director of engineering or the director of community services prior to the time the restriction becomes effective.

C. 1. The director of engineering, the director of community services or that person's designee may also temporarily waive parking restrictions on public streets. Reasons for such waiver may include: repair, remodeling or construction of buildings where parking immediately adjacent to the job site is required; parking lot construction or repair; loading or unloading of moving vans or trucks; or any other reason which in the judgment of the director of engineering, the director of community services or that person's designee would require such waiver. Traffic flow, parking availability, pedestrian traffic and other pertinent factors shall be taken into consideration before a decision is made to grant such waiver. No waiver shall exceed 3 months, and the police department shall be notified in advance of the duration and location of any such waiver by the department of engineering and department of community services.

2. A fee as stated in the City of Eau Claire Fees and Licenses Schedule shall be paid for each temporary parking waiver issued along with a daily charge as stated in the City of Eau Claire Fees and Licenses Schedule per parking stall, where applicable. (Ord. 7202, 2016; Ord. 6363 §31, 2002; Ord. 4753 §1, 2, 1987; Ord. 4645, 1986; Ord. 3727, 1977).

10.12.030 Public employees to obey traffic regulations. The provisions of this chapter shall apply to the operator of any vehicle owned by or used in the service of the United States government or of this state or any political subdivision thereof, and it shall be unlawful for any said

operator to violate any of the provisions of this chapter except as otherwise provided. (Ord. 3313 §XXII (part), 1972; prior code §17.11(4)).

10.12.040 Erection of signs and signals. The traffic engineer is authorized and directed to procure, erect and maintain appropriate standard traffic signs, signals and markings conforming to the rules of the state highway division giving such notice of the provisions of this title and Tables I through IX as required by state law. Signs shall be erected in such locations and manner as the traffic engineer determines will best effect the purposes of this title and give adequate warning to users of the street or highway. (Ord. 3313 §XXV (part), 1972; Prior code §17.16(1)).

10.12.050 Removal of unofficial signs and signals. The traffic engineer shall have the authority granted by Section 349.09, Wisconsin Statutes, and is directed to order the removal of a sign, signal, marking or device placed, maintained or displayed in violation of this chapter or Section 346.41, Wisconsin Statutes. Any charge imposed on a premises for removal of such an illegal sign, signal or device shall be reported to the city council at its next regular meeting for review and certification. (Ord. 3313 §XXV (part), 1972; Prior code §17.16(2)).

10.12.060 Removal of unlawfully parked vehicles. A. Whenever any traffic officer or other authorized employee of the city finds a vehicle standing upon a highway in violation of a prohibition, limitation or restriction on stopping, standing or parking imposed under Chapters 342, 346 and 349 of the Wisconsin Statutes, any section of this title, or in the TABLES of the code of ordinances, said person is authorized to have that vehicle removed. Such removal may be to a position where parking is permitted or lawful or to either private or public parking or storage premises. The operator or owner of the vehicle removed shall pay the reasonable charges for moving, towing and any storage required.

B. Repealed by ord. 6843. (Ord. 6843, 2008; Ord. 4549, 1985; Ord. 4431, 1984).

Chapter 10.16

GRAND AVENUE BRIDGE RESTRICTIONS

Sections:

10.16.010 Motorized vehicles prohibited.

10.16.010 Motorized vehicles prohibited. No person shall operate any motor vehicle, motorcycle, moped, motor bicycle or power-driven cycle upon or over the Grand Avenue Bridge over the Chippewa River, except for motorized equipment utilized by persons with disabilities, and except for officially authorized emergency or maintenance vehicles and equipment. (Ord 7350 §2, 2019; Ord. 4093, 1980).

Chapter 10.20

PARKING METERS AND LOTS

Sections:

10.20.005 Definitions.
10.20.010 Meter spaces--Coin deposits--Time signals.
10.20.020 Meter use times.
10.20.030 Coin substitutes prohibited.
10.20.040 Meters--Disturbing unlawful.
10.20.050 Meters--Moneys collected--Use.

10.20.060 Construction of provisions.
10.20.070 Parking overtime prohibited.
10.20.080 Meters--Parking lots, ramps and streets.
10.20.090 Continued violation.
10.20.095 Waiver.
10.20.100 Unmetered parking lots and parking ramps.
10.20.110 Penalty--Improper parking--Monthly parkers.

10.20.005 Definitions. A. Parking meter. A parking meter is a device or system used to collect money in exchange for the right to park a vehicle in a particular place for a limited amount of time. **(**Ord. 7479, §3, 2022)

10.20.010 Meter spaces--Coin deposits--Time signals. A. The city manager, under direction and authority of the city council shall cause to be placed parking lines or marks on the curb or on the street about or alongside each parking meter space to designate the space covered by the parking meter and to be used for meter parking and each vehicle shall park within such parking space.

B. It is unlawful and a violation of this chapter to park any vehicle across any line or marking established as above provided or to place a vehicle in such a way that it will not be plainly within the area designated by the lines.

C. The city manager shall, under the authority and direction of the city council, locate and designate parking meter zones and parking spaces therein and regulate and control the parking space and use of the parking meter.

D. Each parking meter shall be so set as to display a signal showing authorized parking time in the parking space upon the deposit in said meter of a United States coin(s) by the operator.

E. Additional coins may be inserted by the operator in order to pay for the maximum time available on each given meter. However, parking periods may not be extended beyond the maximum time provided by each given meter, by inserting additional coin after time has elapsed on that meter. The parked vehicle shall be removed promptly from its parking location upon the expiration of the maximum time provided on each meter.

F. The operator of a vehicle, upon entering a parking space shall immediately deposit the required coin or coins in the meter for the time and space required and shall immediately upon the deposit of each coin turn the handle of such meter as far to the right as possible, releasing the handle and allowing the same to return to rest, and such space may then be used by such operator for parking limit time fixed by this chapter.

G. Each parking meter shall have a device to operate and continue in operation from the time of deposit of coin or coins therein until the expiration of parking time.

H. Each meter shall also be so arranged that upon the expiration of the parking time under the deposit therefor, it will indicate and display by appropriate signal that the lawful parking period covered by the coin or coins deposited has expired.

I. If any vehicle remains parked in any meter parking space beyond the parking limit fixed by this chapter therefor, the meter shall display a sign or signal showing illegal parking and in that event such vehicle shall be deemed parked overtime, and such overtime parking shall be a violation of this chapter. (Ord. 7167 §1, 2015; Ord. 4235 §§1, 2, 1981; Ord. 3376 §I, 1973; Ord. 3313 §XVIII (part), 1972; prior code §17.07(12)(b)).

10.20.020 Meter use times. A. Meter parking time provisions hereunder shall be and extend from six a.m. to six p.m., except as otherwise provided in this chapter.

B. No charge for parking in parking meter spaces shall be made for vehicles parked in spaces on holidays. (Ord. 7167 §1, 2015; Ord. 4235 §3, 1981; Ord. 3313 §XVIII (part), 1972; prior code §17.07(12)(c)).

10.20.030 Coin substitutes prohibited. It is unlawful and a violation of this chapter for any person to deposit or cause to be deposited in any parking meter any slug, device or metallic substitute for a coin of the United States. (Ord. 3376 §II, 1973; Ord. 3313 §XVIII (part), 1972; prior code §17.07(12)(d)).

10.20.040 Meters--Disturbing unlawful. It is unlawful and a violation of this chapter for any person to deface, injure, tamper with, open, break, destroy or impair the usefulness of any parking meter installed under the provisions of this chapter. (Ord. 3313 §XVIII (part), 1972; prior code §17.07(12)(e)).

10.20.050 Meters--Moneys collected--Use. Moneys collected from parking meters on the streets and highways and public places in the city may be used for any of the purposes enumerated in Section 349.14 of the Wisconsin Statutes for 1965. (Ord. 3313 §XVIII (part), 1972; prior code §17.07(12) (f)).

10.20.060 Construction of provisions. Except as expressly provided herein, the provisions of this chapter shall not be construed as modifying, impairing or repealing any existing ordinance provisions in the city relating to the use of streets, avenues or areas of the city, or traffic thereon. (Ord. 3313 §XVIII (part), 1972; prior code §17.07(12) (g)).

10.20.070 Parking overtime prohibited. It is unlawful to park any vehicle in a zone marked for time limit parking for a period of time in excess of the prescribed time limit. (Ord. 3313 §XVIII (part), 1972; prior code §17.07(12)(h)).

10.20.080 Meters--Parking lots, ramps and streets. A. The parking lots owned or leased by the city are both metered and unmetered parking zones and for enforcement purposes, are placed under the jurisdiction of the police department or the police department's designee.

B. It is unlawful for any person to place any object upon the municipal parking ramp or parking lots for storage except motor vehicles and except in compliance with the terms and conditions of this title and upon the payment of a fee in the manner provided herein.

C. All pertinent sections of the ordinance codified herein, including penalty provisions, shall apply to the municipal parking ramp and parking lots and the operation thereof.

D. The city manager shall, under the authority and direction of the city council, direct the installation of the parking meters upon the municipal parking lots and shall determine the charge to be made therefor, with or without parking meters, and shall make such other regulations in relation thereto as from time to time shall be necessary. The terms and conditions of such parking shall be publicly displayed upon the premises or upon the parking meters indicating the charge and periods therefor.

No person shall park a vehicle within the municipal parking ramp or such parking lots without complying with the terms and conditions of such parking or without paying the applicable charge therefor.

E. The parking charges and periods for the Barstow Street Lot, Farwell Street Lot, Seaver Street Lot, Water Street Lot, Riverside Parking Deck, and all other on-street meters shall be as stated in the City of Eau Claire Fees and Licenses Schedule.

F. In the off-street parking lots referred to in subsection E. of this section, the charge for monthly parking shall be as stated in the City of Eau Claire Fees and Licenses Schedule in lieu of the payment of the hourly rate established under subsection E. of this section for the following areas: At spaces metered for ten hours or more, or at spaces metered for less than ten hours if these areas are specifically signed as allowing the use of the permit.

G. The transportation engineer or designee may issue parking permits for the use of a city lot to the sponsor of an event. The permits shall be valid for the anticipated time of such event. The charge for the permit shall be as stated in the City of Eau Claire Fees and Licenses Schedule. The sponsor shall date the permit for use on a specific day of such event. Attendees at such event may use such permit for parking in such lot without the payment of a further fee or charge. (Ord. 7479 §2, 2022; Ord. 7406, 2021; Ord. 7359, 2020; Ord. 7241 §1, 2017; Ord. 7167 §2, 2015; Ord. 6363 §32, 2002; Ord. 5908, 1998; Ord. 5883 §1, 1998; Ord. 5335 §§ 1, 2, 1993; Ord. 5288 §1, 1992; Ord. 5278 §1, 1992; Ord. 5267, 1992; Ord. 5134, 1991; Ord. 5112, §§1, 2, 1991; Ord. 5110 §1, 1990; Ord. 4958, 1989; Ord. 4899 §§1, 2, 1989; Ord. 4886 §1, 1989; Ord. 4789 §16, 1987; Ord. 4780 §1, 1987; Ord. 4683 §1, 1986; Ord. 4550 §1, 1985; Ord. 4513 §§1, 2, 1984; Ord. 4470 §§1, 4, 1984; Ord. 4454 §2, 1984; Ord. 4451 §§1, 2, 1984; Ord. 4235 §§4, 5,

1981; Ord. 4104, 1980; Ord. 4091 §§1, 2, 1980; Ord. 3978, 1979; Ord. 3657, 1976; Ord. 3550 (part), 1975; Ord. 3511 §1, 1975; Ord. 3376 §III, 1973; Ord. 3313 §XVIII (part), 1972; Ord. 3283 §II, 1972; prior code §17.07 (12)(i)).

10.20.090 Continued violation. In addition to an initial violation of this chapter, each period of time which is equal to and in excess of the prescribed parking meter time limit, or two hours, whichever is less, during which a vehicle remains in violation shall constitute a separate violation of this provision. (Ord. 4118, 1980; Ord. 3313 §XVIII(part), 1972; Ord. 3234 §I, 1971; prior code §17.07(12)(j)).

10.20.095 Waiver. The city manager, or designee, may waive, for a limited period of time, the parking fee or charge and the time limit provided for within any municipal parking lot or ramp, if the city manager or designee reasonably determines that the public benefit resulting from such a waiver exceeds the gain which would otherwise be derived from the imposition of such fee or charge or enforcement of such time limit. The city manager or designee shall file with the city clerk written findings upon which any such determination is based. (Ord. 5259, 1992).

10.20.100 Unmetered parking lots and parking ramps. The following unmetered parking lots and parking ramps are established with parking hours, rates and times as stated in the City of Eau Claire Fees and Licenses Schedule: Chippewa Street Lot, Forest Street Lot, Menomonie Street Lot, Municipal Parking Ramp, Riverside Parking Deck, Riverview Parking Lot, Schlegelmilch-McDaniel Lot, Seaver Street Lot, Starr Avenue/Birch Street Lot, Transfer Center Parking Ramp, and L.E. Phillips Memorial Public Library. (Ord. 7479 §4, 2022; Ord. 7359 §3, 2020; Ord. 6901, 2009; Ord. 6363 §32, 2002; Ord. 6005, 1999; Ord. 5914, 1999; Ord. 5883 §2, 1998; Ord. 5555, 1995; Ord. 5335 §§ 3, 4, 5, 6, 1993; Ord. 5141, 1991; Ord. 5112 §3, 1991; Ord. 5110 §2, 1990; Ord. 4975, 1989; Ord. 4886 §§2, 3, 4, 1989; Ord. 4852, 1988; Ord. 4789 §16, 1987; Ord. 4683 §§1, 2, 1986; Ord. 4550 §2, 1985; Ord. 4513 §3, 1984; Ord. 4454 §1, 1984; Ord. 4451 §3, 1984; Ord. 4091 §3, 1980; Ord. 4012 §§1--5, 1979; Ord. 3945, 1978; Ord. 3576 (part), 1975; Ord. 3511 §2, 1975; Ord. 3376 §IV, 1973; prior code §17.07(12)(k)).

10.20.110 Penalty--Improper parking--Monthly parkers. The forfeiture for violation of the provisions of Section 10.20.100 as it pertains to parking in undesignated areas shall be equal to the rate for hourly parking for nine to twelve hours, as stated in the City of Eau Claire Fees and Licenses Schedule . (Ord. 6363 §32, 2002; Ord. 4012 §6, 1979).

Chapter 10.24

SPECIAL PARKING RESTRICTIONS

Sections:

10.24.010 Parking prohibited in specific places.
10.24.015 Heavy vehicle parking.
10.24.020 Physically disabled persons--Parking.
10.24.025 Third ward/university parking.
10.24.030 Business district parking.

10.24.010 Parking prohibited in specific places. It is unlawful for the operator of a vehicle to park such vehicle in any of the following places except to comply with the directions of a traffic officer or traffic control signal or sign:

A. Catherine Street Parking. Parking is prohibited on the south side of Catherine Street from First Avenue to Second Avenue.

B. Dewey Street Bridge Parking. No trucks weighing in excess of three tons loaded, buses or vans shall be parked or left standing at any time on the Dewey Street Bridge crossing the Eau Claire River.

C. Elizabeth Street Parking. Parking is prohibited on the south side of Elizabeth Street from First Avenue to Second Avenue.

D. Grand Avenue Parking. Fifteen minutes of courtesy parking shall be permitted on East Grand Avenue between Barstow Street and Graham Avenue, between the hours of six a.m. to nine p.m., but the operator of a vehicle shall not park, stop or leave standing such vehicle for longer than fifteen consecutive minuets between the hours of six a.m. to nine p.m. on East Grand Avenue between Barstow Street and Graham Avenue.

Signs shall be erected and maintained designating the application of this section.

E. Barstow Street Parking. Barstow Street, east side, between Railroad Street and Galloway Street, no person shall park any vehicle between the hours of seven a.m. and nine a.m. and between the hours of three p.m. and six p.m., except Saturday and Sunday, and no person shall park a vehicle for longer than one hour between the hours of nine a.m. and three p.m. thereon, except Saturday and Sunday.

F. City Hall Lot. No person shall park a vehicle for longer than thirty minutes between the hours of eight a.m. and five p.m. in the City Hall parking lot, north end (visitor parking area).

G. Parking is prohibited upon any boulevard area. In this subsection, "boulevard area" means that part of the street right-of-way lying between the property line and that portion of the street which is open for use for general vehicular travel by the public as a matter of right.

H. Second Avenue, west side, from 30 feet south of Grand Avenue to 150 feet south of Grand Avenue, designated for “law enforcement vehicles only.”

I. Parking Adjacent to Bus Stops. No person shall stop or park a vehicle, other than a City of Eau Claire bus, within fifty (50) feet of a duly designated bus stop, except for emergency safety reasons.

J. Parking in Lane of Travel or Sidewalk. No person shall stop or park a vehicle within a lane of traffic, within a designated bicycle lane, or on a trail or sidewalk except to comply with traffic laws or for other emergency safety reasons. (Ord. 7175, 2016; Ord. 6656, 2006; Ord. 6200, 2001; Ord. 4499,§1 1984; Ord.4208, 1981; Ord. 4158, 1981; Ord. 4114 §1, 1980; Ord. 3912 §1, 1982; Ord. 3447, 1974; Ord. 3340 §I, 1973; Ord. 3313 §X, 1972; Ord. 3292 §I, 1972; Ord. 3235 §II, 1971; prior code §17.07(2)).

10.24.015 Heavy vehicle parking. A. Purpose. The regulations and restrictions established in this section have been made in accordance with the policy to preserve and maintain the integrity of residential zones by:

1. Limiting traffic congestion and noise.
2. Preserving aesthetic harmony.
3. Limiting deterioration of streets.
4. Ensuring the safety and peace and quiet of its residents.

B. In this subsection:

1. "Heavy vehicle" means any vehicle or combination of vehicles designed or used for transporting persons or property of any nature for commercial, industrial or agricultural purposes and having a gross weight of more than six thousand pounds.

2. No person shall park any heavy vehicle at any place in any residential zone, as determined under Title 18, the zoning code, except for such time as is reasonably necessary to facilitate the loading or unloading of such vehicle. (Ord. 4499, §2, 1984).

10.24.020 Physically disabled persons--Parking. A. In this section, "motor vehicle used by a physically disabled person" has the same meaning as contained in s. 346.503(1), Wis. Stats., including all existing and future amendments thereto.

B. Parking upon the following streets or portions of streets shall be prohibited at all times except for a motor vehicle used by a physically disabled person.

1. Ball Street, south side, from 250 feet east of Spring Street to a point 300 feet east of Spring Street;

2. Emery Street, north side, from 50 feet east of Barstow Street to 100 feet east of Barstow Street;

3. Dewey Street, west side, from 110 feet south of Grand Avenue to 150 feet south of Grand Avenue;

4. Eau Claire Street, north side, from 100 feet east of Farwell Street to 150 feet east of Farwell Street;

5. Grand Avenue, south side, from Graham Avenue to 50 feet east of Graham Avenue;

6. Main Street, north side, from 35 feet west of Barstow Street to 60 feet west of Barstow Street;

7. Wisconsin Street, north side, from 70 feet west of Farwell Street to 95 feet west of Farwell Street;

8. Gibson Street, south side, from 35 feet west of Graham Avenue to 60 feet west of Graham Avenue;

9. Broadway Street, north side, from 105 feet west of Third Avenue to 155 feet west of Third Avenue;

10. Second Avenue, west side, from 80 feet north of Grand Avenue to 140 feet north of Grand Avenue;

11. Third Avenue, west side, from 35 feet north of Broadway Street to 85 feet north of Broadway Street.

12. Barstow Street, west side, from 50 feet north of Main Street to 75 feet north of Main Street;

13. Niagara Street, north side, from 55 feet west of Fourth Avenue to 105 feet west of Fourth Avenue;

14. Agnes Street, west side, from 95 feet south of Sherwin Avenue to 150 feet south of Sherwin Avenue;

15. Oxford Avenue, east side, from 110 feet north of Lake Street to 215 feet north of Lake Street.

16. Eau Claire Street, south side, from 75 feet west of South Barstow Street to 50 feet west of South Barstow Street.

17. Wisconsin Street, south side, from 85 feet west of North Farwell Street to 75 feet west of North Farwell Street.

C. The method of allocation of parking stalls reserved for a motor vehicle used by a physically disabled person as provided by s. 346.503(1m)(a), Wis. Stats., including all existing and future amendments thereto, shall apply to all publicly owned parking lots and parking ramps for the exclusive use of the general public. The transportation engineer shall designate parking stalls in such parking lots and parking ramps in accordance with such statutory provision.

D. Parking on the following streets or portions of streets shall be restricted as designated for the purpose of accommodating physically disabled persons or persons with special medical needs.

1. Birney Street, west side, from Brackett Avenue to 75 feet north of Brackett Avenue -- Loading Zone-No Parking 6:00 a.m. to 4:00 p.m., Monday through Friday.

2. Sixth Avenue, west side, from Fulton Street to 75 feet south of Fulton Street -- Loading Zone-No Parking. (Ord. 7455 §2, 2021; Ord. 7241 §2, 2017)

10.24.025 Third ward/university parking. A. No person shall park any vehicle at any time in any of the following places within the third ward/university parking district:

1. Within 20 feet of a fire hydrant.

2. Within 8 feet of an entrance to a private road or driveway.

B. "Third ward/university parking district" shall include those public streets within an area bounded by and including Gilbert Avenue from Thorpe Commons to South Farwell, South Farwell Street to Summit Avenue, Summit Avenue to Rust Street, Rust Street southerly to Putnam Drive, Putnam Drive westerly to Park Avenue, and Park Avenue north to Summit Avenue.

C. Locations in which parking is prohibited by this code section shall be designated by official traffic signs. (Ord. 7241 §3, 2017; Ord. 6653 §1, 2006; Ord. 6516, 2004; Ord. 6372, 2003; Ord. 6173, 2001; Ord. 6095, 2000; Ord 5997, 1999; Ord. 5629, 1996; Ord. 5459 §1, 1994; Ord. 5382, 1994; Ord. 5374, 1993; Ord. 5369 §1, 1993; Ord 5236, 1992; Ord. 5228, 1992; Ord. 4653 §1, 1986; Ord. 4572, 1985; Ord. 4566 §1, 1985; Ord. 4522 §1, 1985; Ord. 4164 §1, 1981; Ord. 4157 §1, 1981: Ord. 4128 §3,1980; Ord. 4114 §2, 1980; Ord. 4016 §3, 1979; Ord. 3929, 1978; Ord. 3914 §1, 1978; Ord. 3870 §5, 1978; Ord. 3796, 1977).

10.24.030 Business district parking. A. Definition. For restrictions established in this section, the term “block face” means the portion of a street between two intersections, including all on-street parking, both sides and center (where applicable).

B. Block face parking restriction. It is unlawful for anyone to park a vehicle on the same block face for a period of more than the designated restricted time frame as signed on the block face areas in the Business Districts, on the streets specifically listed in the section titled “Table IX, Parking During Specified Hours Two a.m.to six a.m.” Each consecutive time restricted period during which such vehicle is not moved to a different block face shall constitute a separate offense. (Ord. 7479 §1, 2022)

Chapter 10.30

RIGHT TURNS PROHIBITED AT SIGNALIZED INTERSECTIONS

Sections:

10.30.010 Right turns prohibited.

10.30.010 Right turns prohibited. Vehicular traffic facing a red signal is prohibited from making a right turn at the following signalized intersections and the traffic engineer is authorized and directed to post an appropriate sign or signs at such intersections advising motorists thereof:

Farwell Street and Madison Street, when entering from the north on Farwell Street;

Keith Street and Brackett Avenue when entering from the north and south on Keith Street

Main Street and Farwell Street, when entering from the east on Main Street. (Ord. 7197, 2016; Ord. 3992, 1979; Ord. 3913 §2, 1978).

Chapter 10.32

RAILROADS AND TRAINS

Sections:

10.32.010 Obstructing street crossings--Standing.
10.32.020 Obstructing street crossings--Operating.
10.32.030 Obstructing intersections--Passenger discharge.
10.32.040 Obstructing street crossings--More than one train.
10.32.050 Obstructing street crossings--Violation, penalty.
10.32.060 Flagman at crossing.
10.32.070 Unlawful switches.
10.32.080 Violation--Section 10.32.070.

10.32.010 Obstructing street crossings--Standing. It is unlawful to stop and leave standing any railroad train, locomotive or car upon or across any street crossing in the city longer than ten minutes. (Ord. 3089 §I(1), 1969).

10.32.020 Obstructing street crossings--Operating. It is unlawful to operate or permit to be operated any railway train, locomotive or car upon or across any street crossing in the city to the obstruction of public travel thereon for a longer period of time then ten minutes. (Ord. 3089 §I(2), 1969).

10.32.030 Obstructing intersections--Passenger discharge. It is unlawful to stop any railroad train or car within an intersection or on a crosswalk in the city for the purpose of receiving or discharging passengers. (Ord. 3089 §I(3), 1969).

10.32.040 Obstructing street crossings--More than one train. It is unlawful to obstruct any street crossing in the city for a continuous period of more than ten minutes by the operation of more than one train or locomotive over the same crossing. (Ord. 3089 §I(4), 1969).

10.32.050 Obstructing street crossings--Violation, penalty. Any conductor, engineer or brakeman on any engine or train so stopping, operating on, or discharging passengers on any crossing or crosswalk in violation of this chapter shall be subject to a fine of not less than ten dollars nor more than one hundred dollars, and the corporation owning or operating any such train, engine or car shall be subject to a fine of not less than twenty-five dollars nor more than two hundred dollars for each offense. (Ord. 3089 §I(t),1969).

10.32.060 Flagman at crossing. The railway company owning and maintaining the railway track at the intersection of Fifth Avenue, Chestnut and Mappa Streets in the city, and operating trains thereon by means of steam power is required, ordered and directed to provide and keep a flagman at said place of crossing said streets with its locomotives, cars and railway trains at its own expense. (Prior code §23.03).

10.32.070 Unlawful switches. It is unlawful for any railway conductor, engineer or other railway employee or employees, having in charge or operating a train of cars, or running or operating a switch engine or other engine or locomotive used for hauling or propelling cars or trains to make any running, or flying switches or kicking cars across that part of North Barstow Street within the city where the main track of the Chicago, Milwaukee & St. Paul Railway Company crosses the same. (Prior code §23.04).

10.32.080 Violation--Section 10.32.070. Any person who violates Section 10.32.070 shall, upon conviction thereof, pay a fine of not less than five dollars nor more than twenty-five dollars, for each offense, together with the costs of prosecution. On default in payment of such fine and costs the person so convicted shall be confined in the county jail not to exceed thirty days unless such fine and costs are sooner paid. (Prior code §23.05).

Chapter 10.36

SNOW EMERGENCY REGULATIONS

Sections:

10.36.010 Declaration of emergency.
10.36.020 Vehicles prohibited--Emergency termination.
10.36.030 Vehicles stopped illegally.
10.36.040 Vehicles stopped--Removal.
10.36.050 Penalty for violation.

10.36.010 Declaration of emergency. Whenever in the opinion of the director of community services or that person's designee an emergency exists in the city or in a section or sections thereof because of snow, freezing rain, sleet, ice, snow drifts or other natural phenomena which would create or will likely create hazardous road conditions impeding or likely to impede the free movement of fire, health, police, emergency or other vehicular traffic or otherwise endanger the safety or welfare of the community, such official may declare an emergency to exist for a period of seventy-two hours. Notice of such emergency shall be given by press, radio or television, which news media shall be requested to cooperate with city officials and when given, such notice shall constitute due and proper notice. When in the opinion of such official such emergency conditions do exist for a period in excess of the aforesaid emergency period, he is authorized to declare successive emergency periods. At least two hours must elapse after the first publication by press, or radio, or television before the penalty provisions herein shall become operative. (Ord. 7202, 2016; Ord. 4605 §1, 1985; Ord. 4139, 1980; Prior code §17.14(1)).

10.36.020 Vehicles prohibited--Emergency termination. During the period of time between a declaration of emergency by any such official and the end of such emergency, the vehicles shall not be left stopped, parked, abandoned or otherwise unattended on an arterial street or bus route in the city on which a "snow emergency route" sign is evident. The emergency may be terminated by declaration of such official similarly publicized and shall be deemed terminated as to any particular street involved as soon as snow has been plowed from the entire width of any such street and it has stopped snowing following declaration of an emergency because of snow conditions. Parking may be resumed on individual streets as soon as snow plowing has been completed on the full width of such street. (Ord. 4605 §2, 1985; Prior code §17.14(2)).

10.36.030 Vehicles stopped illegally. Any vehicle stopped, parked, abandoned or otherwise left unattended in violation of Section 10.36.020 is declared to be an obstruction to the public streets and a violation of this chapter. (Prior code §17.14(3)).

10.36.040 Vehicles stopped--Removal. In the event any vehicle is stopped, parked, abandoned or left unattended in violation of Section 10.36.020, the director of engineering or the director of community services, the city engineer, or the chief of police, including also all the employees of the engineering division, the streets division, and the police department of the city, are authorized to remove or cause to be removed any such vehicle and to have such vehicle towed away. (Ord. 7202, 2016; Prior code §17.14(4)).

10.36.050 Penalty for violation. Any person who violates any of the provisions of Section 10.36.020 shall upon conviction thereof, forfeit not less than five dollars nor more than one hundred dollars plus the costs of prosecution, and in default of payment of the forfeiture and costs of prosecution shall be imprisoned in the county jail of Eau Claire County until such costs and forfeiture are paid, but not exceeding ninety days. In addition, any costs or expenses incurred in connection with the towing away or storing of such vehicle, if this has been done, shall be added to the forfeiture. (Prior code §17.14(5)).

Chapter 10.38

ALTERNATE SIDE PARKING

Sections:

10.38.010 General provisions.
10.38.020 Vehicles stopped illegally.
10.38.030 Vehicles stopped--Removal.
10.38.040 Penalty.

10.38.010 General provisions. Between November 1 and May 1 inclusive, alternate side parking regulations shall be in effect on all streets in the City of Eau Claire. Such regulations shall apply as follows:

A. On odd-numbered days, vehicles shall only be parked, stopped or left standing on that side of the street having odd-numbered addresses.

B. On even-numbered days, vehicles shall only be parked, stopped or left standing on that side of the street having even-numbered addresses.

C. The provisions of this section shall only be in effect between midnight and 7:00 a.m.

D. The provisions of this section shall not supersede more restrictive parking regulations in effect in the City, including without limitation, the declaration of a snow emergency under Chapter 10.36.

E. Alternate side parking regulations may be:

1. Delayed until after November 1, until alternate side parking is declared necessary by the Director of Community Services or her or his designee.

2. Suspended prior to May 1, after all streets have been swept at least once, upon declaration of the Director of Community Services or her or his designee. (Ord. 7336, 2019; Ord. 7202, 2016; Ord. 7166 §1, 2015; Ord. 7159, 2015; Ord. 6920, 2010; Ord. 4597 §1, 1985; Ord. 4529, 1984; Ord. 4523 §1 §2, 1984; Ord. 4434 §1, 1984).

10.38.020 Vehicles stopped illegally. Any vehicle stopped, parked, abandoned or otherwise left unattended in violation of Section 10.38.010 is declared to be an obstruction to the public streets and a violation of this chapter. (Ord. 7159, 2015)

10.38.030 Vehicles stopped--Removal. In the event any vehicle is stopped, parked, abandoned or left unattended in violation of Section 10.38.020, the director of engineering or the director of community services, the city engineer, or the chief of police, including also all the employees of the department of engineering, the streets division and the police department of the city, are authorized to remove or cause to be removed any such vehicle and to have such vehicle towed away. (Ord. 7202, 2016; Ord. 7159, 2015)

10.38.040 Penalty. Any person who violates any of the provisions of this chapter shall, upon conviction thereof, forfeit not less than $5.00 nor more than $100.00 plus the costs of prosecution, and in default of payment of the forfeiture and costs of prosecution, shall be imprisoned in the county jail of Eau Claire County until such costs and forfeiture are paid, but not exceeding 5 days. In addition, any costs or expenses incurred in connection with the towing or storing of a vehicle in violation of this chapter shall be added to the forfeiture. (Ord. 4597 §3, 1985).

Chapter 10.40

MISCELLANEOUS REGULATIONS

Sections:

10.40.010 Leaving automobile unattended.
10.40.020 Leaving keys in vehicles.
10.40.030 Vehicle storage on street.
10.40.040 Alley use regulations.
10.40.050 School police.
10.40.055 Regulations on public school property.
10.40.070 University of Wisconsin System grounds.
10.40.080 Transportation of tractors.
10.40.090 Special and season weight limitations.
10.40.100 Accident reports.
10.40.110 Enforcement.
10.40.120 Uniform citation.
10.40.130 Parking citations.
10.40.135 Parking citations--Who may issue.
10.40.140 Officers accepting bonds--Procedure.
10.40.150 Officers accepting bonds--Delivery to treasurer.
10.40.160 Regulation of off-road motor-driven cycles, all-terrain vehicles and snowmobiles.
10.40.170 Exhibition driving.
10.40.180 Bus transfer station.

10.40.010 Leaving automobiles unattended. No person shall leave an automobile unattended on any street, parking lot, public ground or alley while the motor is running. (Ord. 3313 §XV, 1972; prior code §17.07(11)(c)).

10.40.020 Leaving keys in vehicles. A. No person shall permit a motor vehicle in his custody to stand or remain unattended upon any street, alley or public place in the city without first

stopping the engine, locking the ignition, removing the key and taking it with him. (Ord. 5000, 1989; Ord. 3313 §XV, 1972; prior code §17.07(11)(d)).

10.40.030 Vehicle storage on street. A. Twenty-four Hour Storage. It is unlawful for any person to leave or park any vehicle at any one place upon any street or alley for a period of more than twenty-four consecutive hours. Each consecutive twenty-four hour period during which such vehicle is not moved at least seventy-five feet shall constitute a separate offense. (Ord. 4534 §2, 1984; Ord. 3313 §XIV, 1972; Prior code §17.07(11)(a),(b)).

10.40.040 Alley use regulations. A. One-way Traffic. The alleys running north and south between South Farwell Street and Barstow Street from Jones Street to Eau Claire Street shall be open to vehicular traffic moving only in a northerly direction.

B. Signs. Appropriate directing signs shall be erected and maintained at the entrance of such alleys at each block, and at the north exit of such alleys at each block and at the east exit of the said alley in Block 59.

C. Alleys are not to be used as thoroughfares.

1. Statement of Policy. An alley is considered as a secondary means of access to its abutting property, and to use the same as a thoroughfare interferes with such use, increases traffic congestion and is hazardous to the public.

2. It is unlawful for any person to operate any vehicle in or upon any alley in the city for the purpose of using the same as a thoroughfare and having no intention or occasion to stop therein for business or other lawful reasons.

D. No person shall park, stop or leave standing any vehicle, whether attended or unattended, upon the right-of-way of an alley in any residential district except temporarily for the purpose of, and while actually engaging in, loading or unloading or in receiving or discharging passengers, and while the vehicle is attended by a licensed operator so that it may be promptly moved in case of an emergency or to avoid obstruction of traffic. (Ord. 4421, 1984; Ord. 3324 §I, 1972; Ord. 3313 §XXII (part), 1972; prior code §17.08).

10.40.050 School police. A. Appointment and Authority. The chief of police shall appoint special policemen who shall be designated as school police, and shall serve without compensation. The school police shall be appointed from the student bodies of public and private schools of the city. The school police shall be equipped with badges marked "School Police" and are authorized to regulate traffic of all kinds upon the streets of the city within school zones and other designated areas and during school hours. The school police shall be subordinate to and shall obey all orders of any police officer of the city.

B. Stopping by School Police. No driver of any vehicle shall fail to stop his vehicle when directed to do so by any school police officer or adult school crossing guard, and no driver of any vehicle shall again place such vehicle in motion until directed to do so by such school police officer or adult school crossing guard.

C. Within the city of Eau Claire, in accordance with Section 349.215, Wisconsin Statutes, adult school crossing guards for the protection of persons who are crossing a highway in the vicinity of a school shall be appointed by the Eau Claire area school district or by the private school which they serve. (Ord. 5264, 1992; Ord. 5029, 1990; Ord. 4205, 1981; Ord. 3313 §XXII (part), 1972; prior code §17.09).

10.40.055 Regulations on public school property. A. Right-of-way. Whenever any person is operating a motor vehicle within a public school parking lot, such person shall yield the right-of-way to any pedestrian.

B. Negligent or Reckless Operation. It is unlawful for any person to operate a motor vehicle within a public school parking lot in such a manner as to endanger the safety of his own person or property or the safety of another's person or property by the negligent or reckless operation of the vehicle.

C. It shall be unlawful to operate any motor vehicle or motor-driven cycle on any portion of school property except for driveways, parking lots and thoroughfares specifically designated for operation of these vehicles by school officials. (Ord. 4642, 1986; Ord. 3510 §1, 1975).

10.40.070 University of Wisconsin System grounds. Section 36.11 (8)(m) of the Wisconsin Statutes is adopted by reference as if set out fully herein. Resolutions duly passed by the Board of Regents, pursuant to the powers vested in it by Section No. 36.11 (8)(m) are adopted by reference as if set out fully herein. (Ord. 7039, 2012; Ord. 3313 §XXII(part), 1972; prior code §17.11(5)).

10.40.080 Transportation of tractors. The driving or transporting of tractors or heavy pieces of machinery with flanged or spike wheels or lugs along any public street or highway within the city is prohibited without a permit from the city council. (Prior code §17.11(f)).

10.40.090 Special and season weight limitations. The traffic engineer shall have the authority to impose special or seasonal weight limits to prevent injury to the roadway of any highway, bridge or culvert within the jurisdiction of the city or for the safety of users of such highway, bridge or culvert and shall be responsible for erecting signs giving notice thereof in accordance with Section 349.16, Wisconsin Statutes. (Ord. 3313 §XXIII (part), 1972; Prior code §17.13).

10.40.100 Accident reports. The operator of any vehicle involved in an accident shall within ten days after such accident file with the city police department a copy of the report required by Section 346.70, Wisconsin Statutes, if any. If the operator is unable to make such report, any occupant of the vehicle at the time of the accident capable of making such report shall have the duty to comply with this section. Such reports shall be subject to the provisions and limitations in Sections 346.70 (4)(f) and 346.73, Wisconsin Statutes. (Ord. 3313 §XXIV, 1972; Prior code §17.15).

10.40.110 Enforcement. This title shall be enforced in accordance with the provisions of Section 345.20 to 345.53, Chapter 299 and Section 66.12, of the Wisconsin Statutes. (Ord. 3313 §XXVI (part), 1972; Prior code §17.17(part)).

10.40.120 Uniform citation. The uniform traffic citation promulgated under Section 345.11, Wisconsin Statutes, shall be used for all moving traffic violations under this title. (Ord. 3313 §XXVI (part), 1972; Prior code §17.17(1)).

10.40.130 Parking citations. Citations for all nonmoving traffic violations under this title shall conform to Section 345.28, Wisconsin Statutes, and shall permit direct mail payment of the applicable minimum forfeiture within ten days of the issuance of the citation in lieu of court appearance. The issuing officer shall specify thereon the amount of the applicable forfeiture as provided in this title. (Ord. 6535 §1, 2004; Ord. 3313 §XXVI (part), 1972; Prior code §17.17(2)).

10.40.135 Parking citations--Who may issue. In addition to police officers, the chief of police may designate civilian personnel to issue parking citations for violation of this code or applicable state statutes. (Ord. 5187, 1991).

10.40.140 Officers accepting bonds--Procedure. Every officer accepting a forfeited penalty or money deposit under this title shall receipt therefor in triplicate as provided in Section 345.26 (3)(b), Wisconsin Statutes. Every officer accepting a stipulation under the provisions of this title shall comply with the provisions of Sections 343.27, 343.28, 345.26 (1)(a) and 345.27 (2), Wisconsin Statutes, and shall require the alleged violator to sign a statement of notice in substantially the form contained on the uniform traffic citation and complaint promulgated under Section 345.11, Wisconsin Statutes. (Ord. 3313 §XXVI (part), 1972; Prior code §17.17(3)).

10.40.150 Officers accepting bonds--Delivery to treasurer. Any officer accepting deposits or forfeited penalties under this title shall deliver them to the city treasurer within twenty days after receipt. (Ord. 3313 §XXVI (part), 1972; Prior code §17.17(4)).

10.40.160 Regulation of off-road motor-driven cycles, all-terrain vehicles and snowmobiles. A. All provisions of Chapter 23 of the Wisconsin Statutes are adopted by reference

and made a part of this chapter as if fully set forth herein, including all existing and future amendments made thereto.

B. In this section, "all-terrain vehicle" means a motor vehicle designed primarily for use off the roadway and able to be operated upon land, snow or water, and usually equipped with flotation tires or tracks.

C. No person shall operate an off-road motor-driven cycle, all-terrain vehicle or snowmobile on the private property of another without written permission of the property owner, with that permission to be carried on the person of the operator.

D. No owner or other person having charge or control of an off-road motor-driven cycle, all-terrain vehicle or snowmobile shall knowingly authorize or permit any person to operate such vehicle who is incapable by reason of age or physical or mental disability, or is under the influence of intoxicating liquor, fermented malt beverages or controlled substances.

E. The operation of off-road motor-driven cycles, all-terrain vehicles or snowmobiles in public parks, airport lands, playgrounds, athletic fields, parking lots, city well fields, and other public lands in the city is prohibited, except in areas specifically designated for operation of those machines by the City of Eau Claire, the board of education or other appropriate governmental body. Such authorities may place reasonable conditions or restrictions on such operation.

F. No person shall operate an off-road motor-driven cycle, all-terrain vehicle or snowmobile in such manner that the exhaust of the motor makes an excessive or unusual noise.

G. No person shall operate an off-road motor-driven cycle, all-terrain vehicle or snowmobile within the city limits between the hours of 9:30 p.m. and 8:00 a.m.

H. Any person who violates any of the provisions of this section, shall upon conviction thereof, forfeit not less than $25.00 nor more than $500.00, together with the costs of prosecution, and in default of payment of such forfeiture and costs of prosecution shall be imprisoned in the county jail for a term not to exceed 30 days, unless the fine and costs are sooner paid. (Ord. 4940, 1989; Ord. 4876 §2, 1989; Ord. 4655, 1986; Ord. 3651, 1976).

10.40.170 Exhibition driving. A. No driver of any vehicle shall cause, by excessive or unnecessary acceleration, the tires of such vehicle to spin and emit loud noises, or to unnecessarily throw stones, gravel or other material, nor shall any driver cause to be made by excessive and unnecessary acceleration any loud noise, such as would disturb the public peace, nor shall any driver otherwise operate a motor vehicle within the city limits of the city in a manner that would disturb the public peace or endanger the safety of other motorists, pedestrians, or property.

B. Any person who violates provisions of this section shall, upon conviction, forfeit not less than twenty-five dollars, nor more than two hundred dollars, together with the cost of prosecution, and in default of payment of such forfeiture and cost of prosecution, shall be imprisoned in the county jail for Eau Claire County until the forfeiture and costs are paid, but not to exceed thirty days. (Ord. 4220 §3, 1981).

10.40.180 Bus transfer station. The use of the 2 bus lanes serving the downtown bus transfer station located in the 400 block of S. Farwell Street shall be limited to publicly owned mass transit vehicles only during the hours of 5:30 a.m. and 10:30 p.m., Monday through Saturday, and no person shall park, stop or leave standing any other vehicle thereon during such hours. Any vehicle parked, stopped or left standing in violation of this section shall be subject to removal by towing in accordance with state law and city ordinances. (Ord. 6127, 2000; Ord. 4524, 1984).

Chapter 10.42

ABANDONED MOTOR VEHICLES

Sections:

10.42.010 State statutes adopted.
10.42.020 Abandoned motor vehicle.
10.42.030 Removal and storage.

10.42.040 Sale of abandoned vehicles.
10.42.050 Abandonment unlawful.

10.42.010 State statutes adopted. Section 342.40 of the Wisconsin Statutes is adopted by reference and made a part of this chapter as if fully set forth herein. (Ord. 4534 §1, 1984).

10.42.020 Abandoned motor vehicle. Abandoned motor vehicle means any unattended motor vehicle, trailer, semi-trailer or mobile home that has been left or parked upon any public highway or public property for more than 48 hours, or left upon any private property without permission of the property owner for that period. A motor vehicle shall not be considered abandoned when it is out of ordinary public view, or when designated as not abandoned by the chief of police or his designee. (Ord. 4534 §1, 1984).

10.42.030 Removal and storage. Any police officer or other person designated by the chief of police who discovers an abandoned vehicle may cause that vehicle to be removed and stored at a suitable place of impoundment pursuant to the provisions of section 342.40 of the Statutes. (Ord. 5565, 1996; Ord. 4534 §1, 1984).

10.42.040 Sale of abandoned vehicles. The purchasing agent, under the powers provided in section 2.92.070 C.3 of the Code of Ordinances shall administer the sale of any abandoned vehicles which are disposed of under the provisions of section 342.40 (3) of the Wisconsin Statutes. (Ord. 4534 §1, 1984).

10.42.050 Abandonment unlawful. It is unlawful to abandon any motor vehicle, semi-trailer or mobile home upon any public highway or public property or without permission on any private property. (Ord. 4534 §1, 1984).

Chapter 10.44

PENALTIES FOR TRAFFIC VIOLATIONS

Sections:

10.44.010 Penalty--Forfeiture.
10.44.020 Forfeitures conformance.
10.44.030 Special local regulations.
10.44.050 Parking.
10.44.055 Citation amount.
10.44.060 Continued violations.
10.44.070 Late payment penalty.

10.44.010 Penalty--Forfeiture. The penalty for violation of any provision of this title shall be a forfeiture as hereinafter provided together with the cost of prosecution imposed as provided in Sections 345.20 to 345.53, Wisconsin Statutes. (Ord. 3313 §XIX (part), 1972; prior code §17.21 (part)).

10.44.020 Forfeitures conformance. Except as provided in Section 10.44.050 for nonmoving traffic offenses, forfeitures for violation of any provision of Chapters 341 to 348 adopted by reference in Section 10.04.020 shall conform to forfeitures for violation of the comparable state offense, including any variations or increases for second offenses. (Ord. 3313 §XIX (part), 1972; prior code §17.21(1)).

10.44.030 Special local regulations. A. The forfeiture for violation of Tables I through VI and Chapters 10.08, 10.09, 10.12, 10.16, 10.24, 10.30, 10.32, 10.36, 10.38, 10.40, 10.42, and 10.48

shall be not less than one dollar nor more than two hundred dollars for the first offense and not less than one dollar nor more than five hundred dollars for the second offense within two years.

B. The forfeiture for any violation of Chapter 10.20, except for Section 10.20.070, shall be $10.00. The forfeiture for violation of Section 10.20.070 shall be $15.00. (Ord. 6669 §1, 2006; Ord. 6438 §4, 2003; Ord. 6273, 2002; Ord. 6237 §1, 2001; Ord. 5351 §1, 1993; Ord. 4534 §3, 1984; Ord. 4511, 1984; Ord. 4434 §2, 1984).

10.44.050 Parking. The forfeitures for offenses in Sections 346.50 to 346.55, Wisconsin Statutes, adopted by reference under Section 10.04.020 shall be:

A. 346.505. Improper parking in handicapped area, 30 dollars to 300 dollars.

B. 346.51 (1). Improper parking on or off roadway, one dollar to two hundred dollars;

C. 346.52 (1). Stopping or standing in prohibited areas, one dollar to forty dollars; second conviction within one year one dollar to one hundred dollars;

D. 346.52 (2). Stopping or standing on highway by grade school, one dollar to forty dollars; second conviction within one year, one dollar to one hundred dollars;

E. 346.53. Parking or standing where prohibited, one dollar to forty dollars; second conviction within one year, one dollar to one hundred dollars;

F. 346.54. Improper parking or standing of vehicle, one dollar to forty dollars; second conviction within one year one dollar to one hundred dollars;

G. 346.55 (1). Parking on left side of highway, one dollar to two hundred dollars;

I. 346.55 (3). Parking on posted private property, one dollar to forty dollars; second conviction within one year one dollar to one hundred dollars. (Ord. 5351 §§2, 3, 1993; Ord. 4662, 1986; Ord. 4351 §4, 1983; Ord. 4246 §3, 1982; Ord. 4157 §§2,3, 1981; Ord. 4146 §2, 1981; Ord. 3376 §V, 1973; Ord. 3313 §XIX (part), 1972; prior code §17.10(4)).

10.44.055 Citation amount. The amount of forfeiture imposed by issuance of a citation for parking violations contained in Section 10.44.050 B., C., D., E., F., G., and I. shall be $30. (Ord. 6684, 2006; Ord. 5351 §4, 1993).

10.44.060 Continued violations. In addition to the initial violation under Section 10.44.050, each period of time during which a vehicle remains in violation which is equal to and in excess of the established parking time limit hereunder shall constitute a separate violation of such provision. (Ord. 3313 §XIX (part), 1972; prior code §17.21(5)).

10.44.070 Late payment penalty. In addition to the forfeiture assessed for any offense enumerated under Section 10.44.030, an additional penalty of five dollars shall be assessed if the same is not paid within ten days of the issuance of the parking ticket or citation for the violation. An additional penalty of ten dollars shall be assessed if the same is not paid within twenty days of such issuance. An additional penalty of ten dollars shall be assessed if the same is not paid within thirty days of such issuance and if a warrant is issued in connection with such offense. (Ord. 7300, 2018; Ord. 6535, 2004; Ord. 4146 §3, 1981).

Chapter 10.48

TRUCK TRAFFIC REGULATIONS

Sections:

10.48.010 Definitions.
10.48.020 Thru truck traffic limited.
10.48.030 Rights of ingress and egress preserved.
10.48.040 Exemption from restrictions.
10.48.050 Penalty for violation.

10.48.010 Definitions. A. "Heavy traffic," for the purpose of this chapter, is defined as all

vehicles not operating completely on pneumatic tires, and all vehicles or combination vehicles, other than motor buses, designed for transporting property of any nature having a gross weight of more than 15,000 pounds.

B. "Thru truck," as regulated herein, is defined as a heavy traffic vehicle driven or used for the transporting of goods, materials, or property of any nature on a street, road, or highway within the corporate limits of the city of Eau Claire that does not have a point of origin or a point of destination on the street on which the vehicle is traveling.

C. A heavy traffic vehicle with a point of origin or point of destination in which the sole access is by way of a street on which "NO THRU TRUCKS" signage has been posted in accordance with this chapter is not considered a "thru truck" for the purpose of enforcement. (Ord. 6272, 2002).

10.48.020 Thru truck traffic limited. A. No person shall operate a thru truck, as defined herein, on any street, road, or highway within the corporate limits of the city of Eau Claire that has been posted with the appropriate "NO THRU TRUCKS" signage.

B. The "NO THRU TRUCKS" signage shall be installed and the prohibition enforced only after adoption of an ordinance by the city council designating the section of street, road, or highway on which heavy traffic vehicles are prohibited.

C. The following streets shall be designated "NO THRU TRUCKS" and the director of engineering or the director of community services or their designee is authorized and directed to cause the appropriate signs to be erected giving notice thereof:

1. Carson Park Drive, from Menomonie Street to W. Grand Avenue;
2. Lake Street, from W. Grand Avenue to Fifth Avenue;
3. Ferry Street, from Short Street to Menomonie Street;
4. London Road, from Cross Street to South end.

(Ord. 7439, 2021; Ord. 7202, 2016; Ord. 6272, 2002).

10.48.030 Rights of ingress and egress preserved. A. Nothing in this chapter shall deny the owner of any land abutting any street, road, or highway the right of ingress and egress thereto, and the right to use the main thoroughfare leading to the street, road, or highway such property abuts. (Ord. 6272, 2002).

10.48.040 Exemption from restrictions. A. The restrictions imposed by this chapter shall not apply to heavy traffic vehicles owned and operated by a municipal body or by an agent of the municipality which are used for the purpose of roadway maintenance, including, but not limited to, snow and ice control or street repair and construction.

B. The restrictions imposed by this chapter shall not prohibit heavy traffic from using routed state trunk highways or from using any street, road, or highway for the purpose of obtaining orders for supplies or moving or delivering supplies or commodities to or from any place of business or residence which has an entrance on such street, road, or highway.

C. The restrictions imposed by this chapter shall not apply to emergency response vehicles. (Ord. 6272, 2002).

10.48.050 Penalty for violation. Any person who violates any provision of this chapter shall be subject to a forfeiture as provided in s. 10.44.030 A. (Ord. 6272, 2002).

Title 12

(RESERVED)

Title 13

STREETS AND SIDEWALKS

Chapters:

13.04 Construction and Repair
13.10 Street Excavations and Openings
13.12 Street Use
13.16 Materials on Streets
13.20 Materials on Sidewalks
13.24 Encroachments
13.28 Street Names--House Numbering
13.32 Vacation of Streets and Alleys

Chapter 13.04

CONSTRUCTION AND REPAIR

Sections:

13.04.010 Installation of sidewalks--General.
13.04.020 Deferral of sidewalk construction.
13.04.025 Procedures for deferral of sidewalk construction.
13.04.030 Design and construction of sidewalks.

13.04.010 Installation of sidewalks--General. This chapter is adopted pursuant to the authority provided in Wis. Stats. 66.615(7). Subject to other provisions of this chapter, sidewalks shall be constructed as follows:

A. Within new subdivisions, as provided in Section 17.12.280 of this code. The provisions of s. 13.04.020, entitled "Deferral of sidewalk construction," and 13.04.025, entitled "Procedures for deferral of sidewalk construction," shall not apply to this subsection A. for the construction of sidewalks within new subdivisions.

B. Abutting any lot described on a certified survey map under Wis. Stats. s. 236.34, or any other unplatted lot, at the time when the main building on the lot is initially constructed or when it is entirely reconstructed or replaced. Prior to issuance of a building permit for such construction, reconstruction or replacement, the property owner shall execute and file with the city Administrator of Inspections and Zoning a written document certifying installation of a public sidewalk abutting such lot or execute a petition to the city for such installation and the levy of special assessments in connection therewith and waiving notice and hearing pursuant to Wis. Stats. s. 66.60(18).

C. Along streets lying within one-half mile of a public or private elementary or secondary school;

D. Along any street or portion of street which is classified by the city council as a collector street or arterial street under the functional street classification system of the city;

E. Where the installation of a sidewalk will connect previously constructed and existing sidewalks within the immediate area;

F. When property owners who own over one-half of the frontage along a street file a petition with the city requesting that sidewalks be installed along such frontage; and

G. At such other locations where the city council determines that one or more of the following conditions exist:

1. Vehicular and pedestrian conflicts present a potential danger to the health and safety of persons; or

2. The number of small children, senior citizens or other persons having special needs reside on a street and require a sidewalk to assure their safety; or

3. Parks, playgrounds or other locations exist which are attractive to large numbers of children and are not served by sidewalks thereby resulting in an immediate danger to the health and safety of such children. (Ord. 6285 §1, 2002; Ord. 4510 §1, 1984).

13.04.020 Deferral of sidewalk construction. Sidewalk shall be constructed in all locations as outlined in section 13.04.010, except the city council retains the authority to review any sidewalk

proposal and to designate procedures to defer the construction thereof whenever it is deemed necessary and desirable. A deferral shall not constitute a permanent waiver of sidewalk construction, and the city council may review and reconsider the need for construction at any time. Sidewalk construction may be deferred in the following situations:

A. Where the construction would be along a cemetery, outlying industrial property, or in any other area where little or no pedestrian use is reasonably anticipated;

B. Where the owner of the property adjacent to the street elects to provide an alternative pedestrian facility which is acceptable and approved;

C. When it is determined that the construction of sidewalk is not feasible or practical due to topographical or other physical constraints; or

D. When it is found that construction of sidewalk would not serve the public interest, safety or convenience. (Ord. 4981, 1989; Ord. 4510 §2, 1984).

13.04.025 Procedures for deferral of sidewalk construction. All requests for deferral of sidewalk construction shall be submitted in writing to the department of engineering. Applications for deferral of sidewalk construction shall be processed as follows:

A. The city engineer or their designee is authorized to approve the deferral of sidewalk construction under the following circumstances:

1. Where the location is on a cul-de-sac or dead-end street of 750 feet or less in length and no other sidewalk exists on the cul-de-sac or dead-end street segment;

2. Where development is substantially complete in the area and no other sidewalk exists on the street segment;

3. Where the location is a remote rural area and no sidewalk exists or is planned to be constructed in the near future;

4. In locations where the city has programmed or scheduled street construction as part of the capital improvement program; or

5. Where topography, street grades or physical constraints make the construction impractical.

B. Decisions rendered by the director of engineering may be appealed by the applicant to the city council for consideration and determination by the council.

C. All applications for deferral of sidewalk construction for reasons not included in subsection 13.04.025 A. shall be submitted to the city council for review, consideration and determination.

D. Locations where construction of sidewalk is deferred shall be subject to the following conditions:

1. A concrete sidewalk section shall be constructed at the time the driveway is constructed in the location and at an elevation established by the department of engineering which is calculated to accommodate a possible future sidewalk in the location.

2. The terrace and yard area shall be graded to meet a possible future sidewalk in the location and elevation established by the department of engineering. This subsection shall not apply where sidewalk construction is not practical for topographic reasons. (Ord. 7202, 2016; Ord. 4981, 1989).

13.04.030 Design and construction of sidewalks. A. Sidewalks shall be constructed in accordance with city specifications as established by the department of engineering. Subject to the provisions of subsection B, and unless as otherwise directed by the city engineer or his designee,, the width of all sidewalks in residential areas shall be 5 feet. The sidewalk width in all other areas shall be established by the city engineer or his designee.

B. The design of sidewalks shall be flexible and shall be adapted to suit the particular needs of the area within which they are constructed. The materials used and designs employed in connection with sidewalk construction shall be consistent with topography and aesthetics. Trees shall not be removed in order to construct sidewalks unless their removal is reasonably necessary in order to accommodate such construction, as determined by the city engineer or his designee. If a boulevard exists, as much space as possible shall be retained on it to provide for the storage of snow. (Ord. 7202, 2016; Ord. 4510 §1, 1984).

Chapter 13.10

STREET EXCAVATIONS AND OPENINGS

Sections:

13.10.010 Definitions.
13.10.020 Permit required.
13.10.030 Permit--When not required.
13.10.040 Bond.
13.10.050 Insurance.
13.10.060 Regulations governing excavations.
13.10.065 Regulations governing structures.
13.10.070 Street opening fees.
13.10.080 Excavation in new streets limited.
13.10.090 Emergency excavations authorized.
13.10.100 Settlement of pavement and surfacing.
13.10.110 Denial of permits.

13.10.010 Definitions. In this chapter, the following words and phrases shall have the meanings designated as follows, unless the context clearly indicates otherwise:

A. "Alley" means the right-of-way dedicated or reserved for alley purposes.

B. "Block" means the distance along a street lying between center lines of intersections.

C. "Department" means the department of engineering.

D. "Director" means the director of engineering or their designee, which may include the city engineer.

E. "Excavation" means any operation in any alley, street or public place in which earth, rock or any other material in or on the ground is moved, removed or otherwise displaced by means of any tool, equipment or explosive, and includes grading, trenching, digging, ditching, drilling, augering, tunneling, scraping, cable or pipe plowing and driving.

F. "Installation" means either an individual storm sewer, sanitary sewer, water main and associated services, public utility facility, or any combination thereof, laid simultaneously, in a single excavation or in more than one excavation, or in a tunnel, through a bored or jacked operation.

G. “Light pole” means a raised source of light located in the right-of-way, that is owned, leased, operated or maintained by the city or otherwise provides a source of safety lighting, as shall be determined by the director of engineering or his or her designee.

H. "Pavement" means the surface of any street, alley, or public place, regardless of the type of material utilized in its construction.

I. "Public place" means any property owned by the city and dedicated or reserved to the city for public purposes.

J. "Street" means the right-of-way dedicated or reserved for street purposes, which may include such surface improvements as pavement, sidewalk, curb, gutter, grassed or landscaped terrace and boulevard.

K. “Structure” means any created or constructed building, box, pole, tower or other thing placed, installed or otherwise located on or within any street, alley, right-of-way, or public place. Structure shall not include traffic control devices or signs or similar public safety or directional signs, a device indicating the presence of underground utilities, newsstands, de minimis attachments accessory to an approved structure, or other like items under two feet wide by three feet in length by four feet in height that are located outside the line of sight or vision triangle and do not otherwise obstruct use of the right-of-way as determined by the city engineer or his or her designee, or as otherwise exempted by law.

L. "Surfacing" means any improvement other than pavement lying on or within a street, alley or public place, such as sidewalk, curb, gutter, turf, grass and landscaping. (Ord. 7225, 2017; Ord. 7202, 2016; Ord. 5130, 1991).

13.10.020 Permit required. No person shall make or cause to be made any excavation or installation of any structure in any street, alley or public place in the city of Eau Claire, without first obtaining a permit from the department. The application for permit shall be in a form as prescribed by the department and may further consist of any additional information required by the department. A permit under this chapter shall not be construed to repeal or amend any City of Eau Claire ordinances pertaining to maintenance of the boulevard strip. The denial of a permit may be appealed to the administrative review board under the procedures specified in ch. 1.06. (Ord. 7225, 2017; Ord. 5130, 1991).

13.10.030 Permit - When not required. Contractors performing excavation or installation work while under city contract or performing work otherwise requested by the city are not required to obtain a permit under this chapter for such work unless a permit is specifically required by the city. (Ord. 7225, 2017; Ord. 5130, 1991).

13.10.040 Bond. Before the issuance of a permit under section 13.10.020, the applicant shall execute and file with the city clerk and keep in effect a corporate surety bond or security deposit in the minimum sum of five thousand dollars ($5,000) conditioned upon the timely and faithful performance of all requirements and conditions of this chapter and of any permit issued to the applicant. The effective period of the bond or security shall be a minimum of two years. (Ord. 5130, 1991).

13.10.050 Insurance. All applicants for a permit shall carry general liability insurance and completed operations insurance, with a minimum combined single limit of $1,000,000 for bodily injury and property damage per occurrence. The insurance policy shall be filed with the city clerk and shall provide for thirty (30) days notice to the city prior to expiration. (Ord. 7225, 2017; Ord. 5130, 1991).

13.10.060 Regulations governing excavations. A. No excavation in any alley, street or public place for any purpose shall be permitted when the ground is frozen, except where necessary, as determined by the director.

B. In opening any alley, street or public place, all pavement and surface improvements shall be removed with the least possible loss of or injury to the surfacing material, and, together with excavated material, shall be placed so as to cause the least practicable inconvenience to the public and as to permit free flow of water along gutters.

C. Each excavation shall be enclosed with sufficient barricades and barriers. All machinery and equipment shall be locked or otherwise effectively safeguarded from unauthorized use when not being used by the permittee, his agents or employees. All barricades shall comply with the following standards:

1. Barricades and construction warning signs shall be constructed and reflectorized in conformance with the Manual on Uniform Traffic Control Devices for Construction Zones (MUTCD), latest edition and revisions.

2. All barricades used at night shall be lighted with at least one red flasher per barricade.

3. Each barricade shall have the name, address and telephone number of the excavating contractor or barricade rental agency marked prominently thereon. The telephone number shall enable contact to be made with the contractor or authorized representative twenty-four hours per day.

D. All necessary precautions shall be taken to guard the public effectively from accidents or damage to persons or property during the permitted work. Each person making such excavation shall be held liable for all damages, including costs incurred by the city in defending any action brought against it for damages, as well as the cost of any appeal, that may result from the neglect by such person or employee of any necessary precaution against injury or damage to persons, vehicles or property.

E. If the excavation requires closing of a street or alley, the department shall be notified at least 24 hours prior to the proposed closing, except in the case of an emergency excavation. Detour routes shall be approved by the department before a permit is granted. All barricades and detour signs shall be furnished and maintained by the contractor or utility company. If the city is required to

establish the detour route, provide signing or traffic control measures, the cost of such services provided shall be billed to the contractor or utility company.

F. All backfilling shall be completed in accordance with the specifications and requirements established by the department. Any excavated material which in the opinion of the director is not suitable for refilling shall be replaced with approved backfill material.

G. Sheathing shall be required for all excavations within all streets other than those having gravel or oiled surfaces, and shall be constructed and maintained in accordance with all applicable OSHA standards. No timber, bracing, lagging, sheathing or other lumber shall be left in any trench.

H. Upon completion of work, all streets, alleys or public places shall be restored to a condition equal to or better than existed prior to the excavation.

I. The permittee may elect to have the city make the pavement repair following an excavation. In such case, as an express condition of granting the permit, the cost of making such repair and maintaining the same for two years following the completion of the repair shall be charged to the permittee.

J. All persons excavating in a street, alley or public place shall comply with Wisconsin Statutes s. 182.0175 to provide advance notice, as required thereunder, to underground facility owners who may be affected by the excavation. (Ord. 5130, 1991).

13.10.065 Regulations governing structures. All structures, other than those intended solely for use as a light pole or those that are an in-kind replacement for a structure in an existing service corridor, as shall be determined by the director of engineering or his or her designee, and accompanying applications shall be in compliance with the regulations below. “In-kind replacement” shall mean a structure that serves the same purpose as, is the same or similar in size as, and does not further or create a nuisance on or within the right-of-way than the structure it is intended to replace.

A. All structures shall be located such that the height of the structure plus an additional 10 feet exists between the structure and any habitable building.

B. All structures shall be located so as not to restrict any line of sight as shall be determined by the director of engineering or his or her designee.

C. All structures shall be located a minimum of 22 feet from any building so as not to inhibit the provision of firefighting or other municipal services.

D. All structures shall be a minimum of 10 feet from all right-of-way designated for pedestrians for all right-of-way adjacent to residentially zoned properties.

E. All structures shall comply with applicable federal, state and local law, including but not limited to building and electric codes.

F. All applications shall include as an attachment a sworn statement from a professional engineer that all proposed structures are designed to maintain structural integrity throughout all scenarios in which such structures may be utilized.

G. All structures shall be placed so as not to be in front of any dwelling or in front of a building occupied for business purposes.

H. All structures shall be located so as to permit unencumbered access to City utilities or the location of anticipated future City utilities as shall be determined by the department, whether such utilities are located above, below or at-grade.

I. If the structure is in the form of a tower or pole that is greater than 10 feet taller than existing poles or tower in nearby right-of-way, the applicant must submit evidence sufficient to demonstrate that:

1. the greater height is required to accomplish the applicant’s purposes;

2. the applicant is prohibited from using existing poles or towers, whether owned by applicant or a third party, to accomplish its purposes because such use is technically infeasible, economically prohibitive or prohibited by law; and

3. the pole or tower, due to its height and size, poses no greater danger to the health, safety, and welfare of the public than existing poles in nearby right-of-way.

J. All structures placed on streets classified as collectors or locals, as defined by the West Central Wisconsin Regional Planning Commission, shall be 40 feet or less in height.

K. All structures shall be located so as to not be contrary to public health, safety or welfare. (Ord. 7225, 2017)

13.10.070 Street opening fees. A. A fee, as stated in the City of Eau Claire Fees and Licenses Schedule, shall be charged for street opening repairs and the placement of structures in city streets, alleys, rights-of-way or other public places. The fee shall be determined according to the number of square feet or lineal feet or fraction thereof of pavement type and quality required to restore the pavement or surface to its original condition.

B. In the case of a structure placement other than a light pole, fees, as stated in the City of Eau Claire Fees and Licenses Schedule, shall be charged upon initial application. (Ord. 7225, 2017; Ord. 6363 §32, 2002; Ord. 5130, 1991).

13.10.080 Excavation in new streets limited. After completion of any permanent improvement or repaving of any street, alley or public place, no permit shall be issued to open, cut or excavate said pavement for a period of 5 years after the date of completion of the pavement improvement or repair unless, in the opinion of the director, an emergency exists which makes it essential that the permit be issued. (Ord. 5130, 1991).

13.10.090 Emergency excavation authorized. In the event of an actual, bona fide emergency, any person owning or controlling any structure, sewer, water main, conduit or utility in or under any street or alley, or such person's agents or employees, may take immediate, appropriate emergency measures to remedy conditions endangering property, life, health or safety without obtaining a permit under this chapter. Such person shall apply for an excavation permit not later than the end of the next working day following the undertaking of such measures. (Ord. 7225, 2017; Ord. 5130, 1991).

13.10.100 Settlement of pavement and surfacing. Regardless of who installed the same, the permittee shall be responsible for the cost of replacement and restoring the grade of pavement or surfacing which has settled within 2 years from the date of completion of backfilling. If following notice thereof by the city, the permittee fails to replace the inferior work, the city shall perform the work and charge the permittee for the actual costs thereof, plus an administrative charge as stated in the City of Eau Claire Fees and Licenses Schedule. Each successive replacement by the permittee shall be subject to the requirements of this section. (Ord. 6363 §33, 2002; Ord. 5130, 1991).

13.10.110 Denial of permits. If any contractor fails to comply with the requirements of this chapter, such performance shall be considered by the department before further excavation or placement of structure permits are granted. If the record indicates substantial or repeated disregard for the provisions of this chapter, further excavation permits may be denied, following provisions for adequate notice and hearing as may be required under Wisconsin Statutes Chapter 68. (Ord. 7225, 2017; Ord. 5130, 1991).

Chapter 13.12

STREET USE

Sections:

13.12.010 Fires in streets.
13.12.020 Playing games.
13.12.025 Skateboards, roller skates, roller skis, in-line skates or similar equipment.
13.12.030 Warning lights required when.
13.12.040 Tampering with barricades or lights.
13.12.050 Hauling loose, dry materials.
13.12.055 Dumpsters and roll-off boxes in the public right-of-way.
13.12.060 Sale of goods.
13.12.062 Sidewalk cafe permit.
13.12.063 Parklet and Parklet Café.

13.12.065 Sidewalk cart food vendors.
13.12.066 Mobile Food Establishments.
13.12.070 Violation--Penalty.

13.12.010 Fires in streets. A. It is unlawful in any street or alley in the city for any person to burn any rubbish, leaves or other combustible material at any time.

B. Any person or persons found guilty of violating the provisions of this section shall be punished by a fine of not less than five dollars and the costs of prosecution. (Prior code §5.04).

13.12.020 Playing games. No person or persons shall, within the city, take part in any game of ball on a public street or alley, nor shall any person or persons take part in tossing or throwing a ball, flying a kite or in other game or play on any public street or alley which shall tend to impede or endanger public travel thereon, which may be dangerous to the safety of such person or persons, or which may be contrary to the interest of public safety. (Prior code §5.08).

13.12.025 Skateboards, roller skates, roller skis, in-line skates or similar equipment. A. It shall be unlawful for any person to operate or ride a skateboard, roller skates, roller skis, in-line skates or similar equipment in any of the following places:

1. On any city street, except as provided in s. 9.76.055.
2. On any sidewalk in a business district. For purposes of this section, a business district shall be defined as any area primarily commercial in nature.
3. In any public parking ramp or parking lot, except as provided in s. 9.76.055.
4. On private property, unless permission has been received from the owner, lessee or person in charge of that property.
5. On any public step, railing, wall, or any appurtenance to a public way, including any such use by a bicycle or snowboard.

B. Operators or riders of skateboards, roller skates, roller skis, in-line skates or similar equipment shall yield the right of way to other pedestrians using city sidewalks or the bicycle way, and shall not otherwise endanger or interfere with normal pedestrian traffic on those sidewalks or the bicycle way.

C. This section shall not include motor scooters. The operation of motor scooters is regulated pursuant to chapter 10.09 of this code. (Ord. 6438 §5, 2003; Ord. 6161, 2001; Ord. 5745 §2, 1997; Ord. 5260, 1992; Ord. 4644, 1986).

13.12.030 Warning lights required when. A. Every person, firm or corporation or the agent of any person, firm or corporation who receives permission from the superintendent of streets to place any building materials or other obstructions upon any street or highway in the city shall place and maintain upon or around such material or other obstruction each night from time of sunset until sunrise, while the same is upon the street or highway, sufficient lights to warn all persons riding, driving or passing along said street or highway of the presence of such material or obstruction.

B. Any person violating the provisions of this section shall, upon conviction, be punished by a fine of not less than five dollars and not more than fifty dollars, and costs of prosecution. (Prior code §5.09).

13.12.040 Tampering with barricades or lights. A. No person or persons shall knock down, destroy or injure any barrier, light or other protection in and upon streets, alleys and public places under construction or improvement in the city; nor shall any person walk, drive upon or in any way injure, disfigure or destroy any pavement upon any street, alley or public place not opened by the superintendent of streets for public use or travel; nor shall any person knock down, destroy or injure any manhole, water hydrant or catch basin in or upon any of the public streets or alleys in the city.

B. Any person or persons found guilty of violating any of the provisions of this chapter shall pay a fine not to exceed one hundred dollars, and the costs of prosecution; and in default of the payment of such fine and costs, by imprisonment in the county jail of Eau Claire County until such fine and costs are paid, not exceeding ninety days. (Prior code §5.10).

13.12.050 Hauling loose, dry materials. A. Any person who is engaged in drawing upon any public street crushed stone, sand, gravel, sawdust, ashes, cinders, lime, tanbark, shavings, waste paper, ice, mortar, coal, earth, rubbish, manure or other loose material likely to sift, fall or be blown upon the streets shall convey and carry the same in tight wagon or truck boxes, and in case the same fall or be scattered in any street, such person shall cause it to be forthwith removed.

B. No person shall cause or permit any automobile, wagon or other vehicle to be loaded and heaped up so that contents or any part thereof shall be scattered in any street or other public place in the city.

C. Any person violating any of the provisions of this section shall be fined not less than one dollar nor more than ten dollars and the costs for each offense, and in case of nonpayment of such fine and costs, shall be imprisoned in the county jail not less than five days nor more than twenty days. (Prior code §5.11)

13.12.055 Dumpsters and roll-off boxes in the public right-of-way. A. No person, firm or corporation, or the agent of any person, firm, or corporation, shall place a dumpster or roll-off box in the public right-of-way without first obtaining a permit from the department of engineering.

B. (Repealed by ordinance no. 6712).

C. It shall be the responsibility of the owner of the dumpster or roll-off box to obtain the permit.

D. The applicant for a permit shall provide the following information:

1. The name, address, and telephone number of the owner.
2. A 24-hour emergency contact name and telephone number.
3. The size of the dumpster.
4. The expected length of occupancy of the right-of-way.
5. The street address of the dumpster location.

E. Each dumpster or roll-off box shall be provided with safety markings consisting of the following approved methods:

1. Alternating red and white DOT-C2-approved 2-inch-wide retroreflective conspicuity tape applied along at least 50% of the exterior sides of the dumpster or roll-off box and entirely across the front and back ends of same. In addition, two 2-inch-by-12-inch segments of white retroreflective conspicuity tape shall be placed together to form an inverted “L” on the exterior of each upper corner of the dumpster or roll-off box.

2. One Type I barricade with an attached flashing yellow light. This barricade shall be placed on the side of the dumpster or roll-off box that faces approaching traffic. For a dumpster or roll-off box in an alley or sidewalk area, barricades of this type shall be provided on both sides of the dumpster or roll-off box that face vehicular or pedestrian traffic.

F. Dumpsters or roll-off boxes shall be located according to the following requirements:

1. Must be adjacent to or as close as possible to the work area.
2. Permission must be obtained by the permit applicant from the affected property owner, if placed in front of a business or residence that is not affected by the work.
3. Must allow a minimum of 11 feet for traffic when placed in an alley. Both ends of the dumpster or roll-off box must be delineated as in subsection E. of this section.
4. Must not block fire exits or be placed under fire escapes.
5. Must maintain 5 feet for pedestrian access when placed on a sidewalk. Protective barricades, together with signs at both ends, must be used to define the pedestrian passageway.

G. Dumpsters or roll-off boxes shall not be placed:

1. Within a parking stall specifically designated according to section 346.50 of the Wisconsin Statutes for handicapped purposes.
2. Within fifteen feet of any hydrant.
3. Within twenty feet of any alley entrance.
4. Within fifty feet of any street intersection.
5. Within a traffic lane.

H. The director of engineering or designee is authorized to approve placement of a dumpster or roll-off box in other locations within the public right-of-way, if in his or her judgment, the placement will not present a hazard to the public if adequate warning devices and safety measures are used.

I. Failure to take corrective action within forty-eight hours of notification may result in the removal of the offending dumpster or roll-off box by city of Eau Claire personnel. Costs incurred in the removal may be charged against the owner of the dumpster or roll-off box.

J. The penalty for violation of any provision of this section shall be a forfeiture of not less than $50.00 per day or more than $200.00 per day for each violation.

K. Any person, firm, or corporation who repeatedly violates the conditions of this section shall be subject to review as described in section 8.32.040, License or permit--Revocation or suspension.

L. A permit fee, as stated in the City of Eau Claire Fees and Licenses Schedule, shall be charged for each dumpster or roll-off box placed within the public right-of-way. (Ord. 7202, 2016; Ord. 6712, 2006; Ord. 6477, 2004).

13.12.060 Sale of goods. It is unlawful for any person, firm or corporation to set up or park any stand, wagon, automobile or other vehicle upon any of the public streets, sidewalks, boulevards, parkways or alleys in the city for the purpose of selling therefrom or exposing for sale any meat, provisions, popcorn, ice cream, confections, refreshments or other eatables or any goods, wares or merchandise, or for carrying on any business or trade whatsoever. This section shall not apply to mobile food establishments licensed in accordance with section 13.12.066 of this code. (Ord. 7180, 2016; Prior code §5.17).

13.12.062 Sidewalk cafe permit. A. Purpose: To further encourage the revitalization of the downtown and Water Street areas of the city, including the development of social and economic activity, the city council finds and determines:

1. That there exists a need for outdoor eating facilities in certain areas of the city to provide a unique environment for relaxation, social interaction, and food consumption.

2. That sidewalk cafes will permit enhanced use of the available public rights of way, will complement the restaurants operating from fixed premises, and will promote economic activity in an area.

3. That the existence of sidewalk cafes encourages additional pedestrian traffic and their presence may impede the free and safe flow of pedestrians. Therefore, a need exists for regulations and standards for the existence and operation of sidewalk cafes to ensure a safe environment.

4. That the establishment of permit conditions and safety standards for sidewalk cafes is necessary to protect and promote public health, safety, and welfare.

B. Definitions.

1. "Sidewalk cafe" shall mean an expansion of a full service restaurant creating an outdoor dining facility on part of the public right of way that is immediately adjacent to the licensed premises for the purpose of consuming food or beverages prepared at the full service restaurant adjacent thereto. "Full service restaurant" shall mean an establishment requiring a restaurant license under chapter 8.16 of the city code of ordinances whose food sales are greater than 50 percent of its gross receipts.

2. "Downtown" shall mean the qualifying properties lying within the area bounded on the north by Cameron Street and William Street as extended to the Chippewa River, on the east by Dewey Street, on the south by Lake Street, and on the west by Fifth Avenue/Fulton Street/Whipple Street. The permitted area includes sidewalk located on both sides of a described boundary street.

3. "Water Street" shall mean the qualifying properties lying within the area bounded on the north by Chippewa Street, on the east by Second Avenue, on the south by the Chippewa River, and on the west by Ninth Avenue. The permitted area includes sidewalk located on both sides of a described boundary street.

C. Permit required.

1. Notwithstanding the provisions of section 13.12.060, a full service restaurant located in the downtown or Water Street areas of the city may apply to the director of engineering or designee for a permit to allow a restaurant to operate a sidewalk cafe. The director of engineering or designee may approve, approve with conditions or restrictions, or deny a permit where necessary to protect the public health, safety or welfare, to prevent a nuisance from developing or continuing, or due to violation of this section, the city code of ordinances, or applicable state or federal law.

2. Before a permit may be issued, the application and site plan shall be reviewed for

approval by the city/county health, city fire inspections and city building inspections departments.

3. Each permit shall be effective for one year, from April 1 until March 31.

4. The permit issued may be transferred to a new owner only for the location and area listed in the permit. The transferred permit shall be valid only for the remainder of the period for which it was originally issued. A new certificate of insurance must be filed with the city within 30 days of the permit transfer.

D. Permit application. Application for a permit to operate a sidewalk cafe shall be submitted to the department of engineering and shall include at least the following information:

1. Completed city application form.

2. Copy of a valid restaurant license in the city as required by chapter 8.16, Food Service Establishments.

3. Copy of a current certificate of insurance in the amount and categories required by section 13.12.062(H).

4. A layout, drawn to scale, which accurately depicts the dimensions of the existing sidewalk area and adjacent private property, the proposed location of the sidewalk cafe, size and number of tables, chairs, steps, planters, and umbrellas, location of doorways, trees, parking meters, bus shelters, sidewalk benches, trash receptacles, and any other sidewalk obstructions, either existing or proposed, within the pedestrian area. This layout shall be submitted on 8½" x 11" paper, suitable for reproduction.

5. Photographs, drawings, or manufacturer's brochures fully describing the appearance and dimensions of all proposed tables, chairs, umbrellas or other objects related to the sidewalk cafe.

6. A non-refundable application fee, as stated in the City of Eau Claire Fees and Licenses Schedule.

7. If seeking to extend sidewalk café setup to areas of the sidewalk laterally beyond that portion of the sidewalk directly fronting applicant's real property, applicant must obtain and include written permission signed by the owner and any tenants of the building in front of which the sidewalk café is proposed to extend, not to exceed 100 feet in either lateral direction beyond the applicant's property line.

E. Permit fees.

1. The application fee for an initial sidewalk cafe permit, with or without an alcohol license expansion, shall be as stated in the City of Eau Claire Fees and Licenses Schedule.

2. The annual renewal fee for a permit, with or without an alcohol license expansion, shall be as stated in the City of Eau Claire Fees and Licenses Schedule.

F. Sidewalk cafe standards. The following standards, criteria, conditions, and restrictions shall apply to all sidewalk cafes, provided, however, that the director of engineering or designee may impose additional conditions and restrictions to protect and promote the public health, safety, or welfare, to prevent a nuisance from developing or continuing, and to comply with this section, the city code of ordinances, and all applicable state and federal laws.

1. Sidewalk cafes are restricted to the public right of way immediately adjacent to the licensed full service restaurant to which the permit is issued.

2. Tables, chairs, umbrellas or other fixtures in the sidewalk cafe:

a. Shall not be placed within five feet of bus stops, taxi stands, fire hydrants, alleys, bike racks. Shall not be placed within five feet of a pedestrian crosswalk or corner curb cut.

b. Shall not block designated ingress, egress, or fire exits from or to the restaurant, or any other structures.

c. Shall be readily removable and shall not be physically attached, chained or in any manner affixed to any structure, tree, post sign, or other fixture, curb, or sidewalk.

d. Shall be removed when the sidewalk cafe is not in operation. Plant tubs may remain in the sidewalk cafe if approved under section 13.12.062(F)(5).

e. Shall be maintained in a clean, sanitary and safe manner.

3. Sidewalk cafes shall be located in such a manner that a distance of not less than four feet is maintained at all times as a clear and unobstructed pedestrian path. For the purpose of the minimum clear path, parking meters, traffic signs, trees, and all similar obstacles shall be considered obstructions.

4. The sidewalk cafe, along with the sidewalk and roadway immediately adjacent to it,

shall be maintained in a neat and orderly manner at all times. Debris shall be removed as required during the day and again at the close of each business day.

5. Plant tubs shall be located in the sidewalk cafe with the approval of the director of engineering or designee. Plant tubs shall be maintained in a safe, neat, clean, and presentable manner.

6. Umbrellas and other decorative material shall be treated wood, canvas, cloth, or similar material that is manufactured to be fire-resistant. No portion of an umbrella shall be less than six feet eight inches above the sidewalk.

7. Signs to be used in the sidewalk cafe shall be in accordance with chapter 16.16 of the city code of ordinances.

8. No food preparation, food storage, refrigeration apparatus, or equipment shall be allowed in the sidewalk cafe.

9. No amplified entertainment shall be allowed in the sidewalk cafe unless authorized as part of a special event.

10. A copy of the site plan, as approved in conjunction with the current sidewalk cafe permit, shall be maintained on the permittee's premise and shall be available for inspection by city personnel at all times.

11. The sidewalk cafe permit covers only the public right of way described in the permit. Tables and chairs on private property will be governed by other applicable regulations.

12. Sidewalk cafes shall not operate after 10:00 p. m. or before 6:00 a. m.

13. The use of a portion of the public right of way as a sidewalk cafe shall not be an exclusive use. All public improvements, including, but not limited to trees, light poles, traffic signals, pull boxes, or manholes, or any public initiated maintenance procedures, shall take precedence over said use of the public right of way at all times. The Chief of Police or designee may temporarily order the removal of the sidewalk cafe for special events, including but not limited to, parades, sponsored runs or walks, or for public health and safety.

14. The city, its officers and employees, shall not be responsible for sidewalk cafe fixtures that are relocated or damaged.

G. Alcohol licensing. Alcohol beverages are not allowed on the public sidewalk at any time. Such activity is governed by chapters 5.28 and 9.52 of the city code of ordinances and by state laws. Notwithstanding the foregoing, the sale and service of alcohol beverages by full service restaurants located in the downtown or Water Street areas may be permitted, provided an expansion of the premise is approved by the City Council for the area described in the sidewalk cafe permit.

H. Liability and insurance. The permittee agrees to indemnify, defend, save, and hold harmless the City, its officers and employees, from any and all claims, liability, lawsuits, damages, and causes of action, which may arise out of the permit or the permittee's activity on the sidewalk cafe.

1. Commercial liability insurance in the amount of at least $1,000,000 per occurrence for bodily injury and property damage, with the city of Eau Claire named as an additional insured, shall show that the coverage extends to the area used for the sidewalk cafe.

2. The permittee shall provide the city with an original certificate of insurance as evidence that the requirements set forth in this section have been met prior to commencing operations.

I. Revocation or suspension. The approval of a sidewalk cafe permit is conditional at all times. A sidewalk cafe permit may be revoked or suspended by the director of engineering or designee where necessary to protect the public health, safety, or welfare, to prevent a nuisance from developing or continuing, in emergency situations, or due to noncompliance with this section, the city code of ordinances, or applicable state or federal law.

J. Appeal. A revocation, suspension, or denial of a permit may be appealed by the permittee to the administrative review board under ch. 1.06. The permit suspension or revocation shall remain in effect pending the hearing.

K. Penalty. The penalty for violation of this section shall be a forfeiture of not less than $50 or more than $500 per day for each violation, together with the costs of prosecution. (Ord. 7378, §1 2020; Ord. 7202, 2016; Ord. 6586, 2005).

13.12.063 Parklet and Parklet Café A. Definitions. The following words, terms and phrases,

when used in this chapter, shall have the meanings ascribed to them in this section, except where the context clearly indicates a different meaning:

1. "Restaurant" shall mean an establishment holding an Eau Claire City-County Health Department Retail Food License and city of Eau Claire restaurant license.

2. "Parklet café" shall mean an expansion of a restaurant creating an outdoor dining facility on part of the public street right-of-way that immediately adjoins the licensed premises for the purpose of consuming food or beverages prepared at the restaurant adjacent thereto.

3. “Parklet” shall mean an expansion of a business creating an outdoor seating area on part of the public street right-of-way that immediately adjoins the business for the purpose of providing expanded seating and service area for customers of the business adjacent thereto.

B. Permit required. 1. A business may apply to the director of engineering or designee for a parklet or parklet café permit to allow a restaurant to operate a parklet or parklet café. The director of engineering or designee may approve, approve with conditions or restrictions, or deny a permit where necessary to protect the public health, safety or welfare, to prevent a nuisance from developing or continuing, or due to violation of this section, the city code of ordinances, or applicable state or federal law.

2. Before a permit may be issued, the application and site plan shall be submitted by applicant and reviewed for approval by the city.

3. Each permit shall be effective for seven (7) months, from April 1 until October 31.

4. The permit shall not be transferable to a new owner.

C. Permit Application. Application for a permit to operate a parklet café shall be submitted to the director of engineering or designee and shall include at least the following information:

1. Completed city application form.

2. Copy of a city restaurant license as required by the city code of ordinances, if applying for a parklet café.

3. Copy of a current certificate of commercial liability insurance in the amount of at least $1,000,000.00 per occurrence.

4. A layout, drawn to scale, that accurately depicts the dimensions of the existing area and adjacent private property, the proposed location of the parklet or parklet café, size and number of tables, chairs, steps, planters, and umbrellas, location of doorways, trees, parking meters, sidewalk benches, trash receptacles, light poles, and any other sidewalk obstructions, either existing or proposed, with in the pedestrian area.

5. Photographs, drawings, or manufacturer's brochures fully describing the appearance and dimensions of all proposed tables, chairs, umbrellas, barriers or other objects related to the parklet or parklet café.

6. Maintenance details, including access panels and how drainage will be provided along the existing gutter.

7. A non-refundable application fee, as stated in the City of Eau Claire Schedule of Fees and Licenses.

D. Permit Fees. The application fees for an initial parklet or parklet café permit and a renewal parklet or parklet café permit, with or without a temporary alcohol license expansion, shall be as stated in the City of Eau Claire Schedule of Fees and Licenses.

E. Standards. The following standards, criteria, conditions, and restrictions shall apply to all parklets and parklet cafés, provided, however, that the director of engineering or designee may impose additional conditions and restrictions to protect and promote the public health, safety, or welfare, to prevent a nuisance from developing or continuing, and to comply with this section, the city code of ordinances, and all applicable state and federal laws. All standards, criteria, conditions, and restrictions are the sole responsibility of the parklet or parklet café permit holder.

1. Parklets and parklet cafés are restricted to the parking lane in the public right-of-way immediately adjacent to the business to which the permit is issued.

2. The parklet or parklet café shall be located on one parking spot and appurtenances thereof shall be a minimum of two (2) feet from the nearest edge of traveled way.

3. The parklet or parklet café shall be located, designed, built, and otherwise conform to the standards as described in the Parklet and Parklet Café Standards adopted here by

reference and available on file with the department of engineering.

4. Parklet or parklet cafés that have not been removed after October 31st may be removed by the City at the owner's expense.

5. Parklets and parklet cafés shall be located only in the downtown or Water Street districts, as defined in section 13.12.062, with one parklet or parklet café permitted on each side of a city block. A permittee shall have first opportunity to renew a permit for the same city block if a permit was held by the permittee in the previous permit year, if renewed by April 1.

6. Parklets and parklet cafés, along with the sidewalk and roadway immediately adjacent to it, shall be maintained in a neat and orderly manner at all times. Debris shall be removed as required during the day and again at the close of each business day.

7. No food preparation, food or beverage storage, refrigeration apparatus, or equipment shall be allowed in the parklet or parklet café.

8. No amplified entertainment shall be allowed in the parklet or parklet café unless authorized as part of a Special Event in accordance with chapter 9.59 of the city code of ordinances.

9. The city, its officers and employees shall not be responsible for parklet or parklet café fixtures that are relocated or damaged.

10. Patio heaters shall not be permitted on the parklet or parklet café.

11. If alcohol is to be served in accordance with subsection F. herein, the parklet café shall be fully enclosed by fencing, railing or other similar means.

12. Use of a parklet or parklet café shall only be permitted during the hours of operation for the operating business, but in no event shall use be permitted between 12:00am and 6:00am. Permittee shall secure the parklet or parklet café in such a manner that the parklet or parklet café cannot be used during hours of closure.

13. The permittee shall not be permitted to have both a sidewalk café permit and a parklet or parklet café permit for the same business.

14. Dogs shall be permitted in a parklet café only upon approval of the city-county health department.

F. <u>Alcohol licensing and service of alcohol beverages.</u>

1. Alcohol may be served only at a parklet café subject to the following conditions:

a. The permittee has a valid and appropriate retail alcohol beverage license for the principal premises.

b. The retail alcohol beverage license premises description includes the parklet café in the description of the licensed premises as an extended area through a temporary license expansion.

c. The retail alcohol beverage license permits the sale of the type of alcohol beverages to be served in the parklet café.

d. Alcohol beverages are sold and served by the licensee or licensee's employees and sold or served only to patrons seated at tables in the parklet café.

e. Alcohol beverages are served by the licensee or the licensee's employees in compliance with alcohol beverage laws, ordinances and regulations.

f. Alcohol beverages may only be served at the parklet café when food service is available through the licensed establishment.

g. The permittee shall be responsible for monitoring the parklet café area to prevent underage persons from entering or remaining in the parklet café, except when underage persons are allowed to be present on the licensed premises under applicable laws.

h. The permittee shall not allow patrons of the parklet café to bring alcohol beverages into the parklet café from another location, nor to carry open containers of alcohol beverages about in the parklet café area, nor to carry open containers of alcohol beverages served in the parklet café outside the parklet café area.

i. The area of the restaurant from which the alcohol beverages are dispensed shall be located indoors and shall not be located in the parklet café area.

j. At times of closing or during times when consumption of alcohol beverages is prohibited, permittee shall remove from the parklet café area all containers used for or containing alcohol beverages. No container of alcohol beverages shall be present in the parklet

café between l1:00 p.m. and 7:00 a.m.

k. The permittee shall post one or more signs in a clearly visible location regarding the requirements for alcohol beverages in the parklet.

l. The permit and license holder shall be required to annually apply for a temporary expansion to serve alcohol in the parklet café if alcohol service is desired by the permit and license holder in subsequent years and is subject to annual review and approval by the city.

G. Liability and insurance. By obtaining the parklet or parklet café permit, the permittee agrees to indemnify, defend, save, and hold harmless the city, its officers and employees from any and all claims, liability, lawsuits, damages, and causes of action which may arise out of the permit or the permittee's activity in the parklet or parklet café. The permittee shall sign an indemnification agreement provided by the city prior to operation of the parklet or parklet café.

1. The permittee shall maintain in full force and effect commercial general liability insurance in the amount of at least $1,000,000.00 per occurrence for bodily injury and property damage, with the City of Eau Claire named as an additional insured, and shall show that the coverage extends to the area used for the parklet or parklet café.

2. The permittee shall provide the city with an original certificate of insurance as evidence that the requirements set forth in this section have been met prior to commencing operations. Thereafter a certificate of insurance shall be provided to the city with a renewal application each year.

H. Revocation or suspension. The approval of a parklet or parklet café permit is conditional at all times. A parklet or parklet café permit may be revoked or suspended by the director of engineering or designee where necessary based on a violation of this ordinance, to protect the public health, safety, or welfare, to prevent a nuisance from developing or continuing, emergency situations, or to comply with the city code of ordinances, or to comply with applicable state or federal law. An alcohol license suspension for the temporary license expansion area shall occur in the event a parklet or parklet café permit is revoked or suspended.

I. Penalty. The penalty for violation of this section shall be a forfeiture of not less than $100.00 or more than $500.00 per day for each violation, together with the costs of prosecution. (Ord 7413, 2021)

13.12.065 Sidewalk cart food vendors. Notwithstanding the provisions of sections 13.12.060 and 9.76.100 of this code, the city council may issue licenses for sidewalk cart food vendors for the sale of specified food and beverage items from mobile pushcarts on the public sidewalks, which shall be operated and conducted in accordance with the following conditions:

A. Each applicant shall file an application with the city clerk or designee on forms provided by the city for each proposed sidewalk cart. The city clerk or designee may require such information on the application as the city clerk or designee considers reasonable and necessary.

B. Each applicant shall pay an annual fee in an amount as stated in the city of Eau Claire fees and licenses schedule for each proposed sidewalk cart.

C. No application shall be accepted for filing unless the applicant possesses the proposed sidewalk cart ready and available for inspection.

D. Each sidewalk cart shall be separately licensed and such license shall not be transferable to another sidewalk cart.

E. All sidewalk cart food vendor licenses shall expire on June 30 of each year, except that a license initially issued during the period beginning on April 1 and ending on June 30 expires on June 30 of the following year.

F. Each sidewalk cart shall be non-motorized and capable of being moved and kept under control by one person. The city council may grant a special license to a person with a disability to operate a sidewalk cart propelled by electric motor, provided that the applicant shall meet all other conditions for a license.

G. All sidewalk carts shall be equipped with at least one leak-proof container for the deposit of waste, garbage, litter, and refuse. All such containers shall be kept covered with tight-fitting lids. When leaving the sales area, the licensee and his employee(s) shall be responsible for the removal of all litter resulting from his business or customer’s use of his business.

H. Affixed permanently and prominently to each cart shall be a sign no smaller than twelve (12) inches by twelve (12) inches displaying the name, address, and telephone number of the licensee.

I. Each licensee shall provide proof of liability insurance for any single accident and for any property damage in the amount of $250,000. A certificate of insurance for such coverage shall be delivered to the city clerk or designee prior to issuance of a license.

J. Each licensee shall comply with all state codes and standards relating to the serving and selling of food or food products.

K. No cart operator shall use noise-makers, other than bells, lights, or music to attract customers. Such bells and music shall not be used after 9:00 p.m. on any day.

L. No cart shall operate before 8:00 a.m. or after 11:00 p.m. on any day except in the downtown and Water Street areas, as defined in section 13.12.062 B., wherein no cart shall operate between the hours of 2:00 a. m. and 8:00 a. m.

M. No cart shall operate in any street, alley, or boulevard.

N. No cart shall operate on any public sidewalk within 50 feet of any business selling the same type product. Further, no cart shall operate on any public sidewalk within 50 feet of any concessions operation or other sidewalk cart vendor selling the same type product.

O. All vending activities shall be conducted so as to maintain a sufficient width of unobstructed public pedestrian walkway adjacent to the vending site. Any vending activities within the city's public parks shall only be permitted on the public sidewalks along the outside perimeter of those parks and shall not include the park's bicycle or walking paths, with the exception of public areas as stated in subsection P. hereof.

P. Sidewalk carts may be allowed to operate within the publicly owned property of Phoenix Park.

Q. A vendor shall be present within the vending site at all times during which items are displayed or sold.

R. The penalty for violation of any provision in this section shall be a forfeiture of not less than $50.00 per day nor more than $200.00 per day for each violation, together with the cost of prosecution. (Ord 7350 §3, 2019; Ord. 7283, §2, 2018; Ord. 6706, 2006; Ord. 6408, 2003).

13.12.066 Mobile Food Establishments. The city clerk or designee may issue licenses for mobile food establishment vendors for the sale of specified food and beverage items from mobile food establishments on the public streets and in certain specified locations in city parks which shall be operated and conducted in accordance with the requirements and limitations expressed in this section.

A. Notwithstanding the provisions of section 9.76.100 and section 13.12.060 of this code, no mobile food establishment shall vend, sell or dispose of or offer to vend, sell or dispose of any food or beverage items, produce or any other thing on any public street or any public property whatsoever in the city of Eau Claire, without having obtained an approved license from the city clerk or designee.

B. Each applicant shall file an application with the city clerk or designee on forms provided by the city for each proposed mobile food establishment. The city clerk or designee may require such information on the application as the city clerk or designee considers reasonable and necessary.

C. Each applicant shall pay an annual fee in an amount as stated in the city of Eau Claire fees and licenses schedule for each proposed mobile food establishment.

D. All mobile food establishment licenses shall expire on June 30 of each year, except that a license initially issued during the period beginning on April 1 and ending on June 30 expires on June 30 of the following year.

E. No license shall be issued unless the mobile food establishment has successfully passed an inspection performed annually by the city of Eau Claire Fire Department.

F. No license shall be issued unless the mobile food establishment has been licensed for such use by the City-County Health Department and has a valid restaurant license from the city. Mobile food establishments shall acquire all licenses and permits for any additional food or beverage items deemed necessary by the City-County Health Department, even if not explicitly required by this section, for public health, safety or welfare purposes.

G. Each mobile food establishment shall be separately licensed and such license shall not be transferable to another mobile food establishment. Such license shall be conspicuously displayed

within the mobile food establishment.

H. The licensee or the licensee's employee or agent shall be present within the vending site at all times during which items are displayed or sold.

I. A mobile food establishment shall meet the following vehicular requirements:

1. A mobile food establishment shall be designed and constructed specifically for the purpose of vending the product or products to be vended; and

2. A mobile food establishment shall have valid license plates and registration as required by Chapter 341, Wis. Stats; and

3. A mobile food establishment shall be in compliance with all Federal, State and local laws or regulations which govern motor vehicles, including, but not limited to, vehicle size requirements; and

4. A mobile food establishment shall be in safe, operable condition with no visible signs of rust or other deterioration; and

5. A sidewalk cart licensed under section 13.12.065 shall not qualify as a mobile food establishment and shall be exempt from this section.

J. All mobile food establishments shall be equipped with at least two (2) leak-proof, approximately thirty (30) gallon containers for the deposit of refuse, one container designated for trash and the other for recyclables. The licensee and his or her employee(s) shall be responsible at all times for the removal of all refuse resulting from his or her business or customer's use of his or her business. Such refuse shall be placed solely in the mobile food establishment's waste bins. No mobile food establishment shall discharge any material onto the street, sidewalk, gutters, storm drain or the property of another, including, but not limited to, public property.

K. The licensee shall permanently and prominently paint on or affix to the mobile food establishment a sign no smaller than twelve (12) inches by twelve (12) inches displaying, at a minimum, the name, address, and telephone number of the licensee. Such required information shall substantially fill the entire minimum space described herein. No separate free-standing signs shall be permitted in any location.

L. Each licensee shall provide proof of liability insurance for any single accident and for any property damage in the amount of $1,000,000.00. Such liability insurance shall be in effect at all times the mobile food establishment is licensed in accordance with this section. A certificate of insurance for such coverage shall be delivered to the city clerk or designee prior to issuance of a license. If such insurance coverage is cancelled, not renewed, or materially changed, the insurer and licensee shall immediately provide notice to the city clerk or designee by certified mail. Failure to maintain such insurance may result in the suspension or revocation of the license.

M. Each licensee shall comply with all state codes and standards relating to the serving and selling of food or food products.

N. No mobile food establishment shall use bells or lights or any other noise-makers, other than music, to attract customers. Such music shall not be used after 9:00 p.m. on any day and shall maintain compliance with chapter 9.56 at all times.

O. No mobile food establishment shall operate before 8:00 a.m. or after 11:00 p.m.

P. A mobile food establishment shall comply with the following operation location requirements:

1. A mobile food establishment shall not be permitted to operate in those areas of the city and any adjacent streets that are situated within a residential zoning district in accordance with chapter 18.04 and any amendments thereto; and

2. A mobile food establishment shall not violate any traffic statute or ordinance; and

3. A mobile food establishment shall comply with all parking restrictions or other requirements, including in city parks. A mobile food establishment shall not park along any one city block or equivalent length of street for a duration exceeding six (6) hours on any given day. Parking exemptions shall not be issued to a licensee under this section; and

4. A mobile food establishment, licensee or the licensee's agent or employee shall not reserve or otherwise hold parking spots on the public streets or in city parks; and

5. No mobile food establishment shall operate in or on any alley, boulevard, sidewalk, city trail, city park or public land unless:

a. specifically authorized through the special event approval process in section 9.59.030; or

b. operating in a designated location within Owen Park, Phoenix Park, Carson Park, Riverview Park, Soccer Park, Boyd Park, Lakeshore Park, McDonough Park, Half Moon Lake Park or
Pinehurst Park per specifications of a license issued in accordance with this section; or

c. operating within Newell Park, Kappus Park, Cameron Park, Mitscher Park, Demmler Park and County Farm Park one night per week, on a day and in a location identified per specifications of a license issued in accordance with this section between the hours of 4:00 p.m. and 7:00 p.m. during the months of June, July and August, subject to all other restrictions in this section; and

6. No mobile food establishment shall operate on any public street within 200 feet of any business holding a valid restaurant license from the City-County Health Department and a valid restaurant license from the city, unless the mobile food establishment obtains written permission from all restaurant license holders within 200 feet of operation and retains such permission within the mobile food establishment; and

7. No mobile food establishment shall operate in a congested area where such operation impedes or inconveniences public use, and shall at all times provide at least four (4) feet of width on all sides for clear and unobstructed pedestrian, bicycle, or other permissible use; and

8. No mobile food establishment shall obstruct an adjacent path or lane of travel, including motor vehicle lanes, bicycle lanes, sidewalks, trails or other designated parking areas; and

9. No mobile food establishment shall conduct business within 20 feet of the intersection of the sidewalk with any other sidewalk; and

10. No mobile food establishment shall conduct business within 10 feet of the extension of any building entrance or doorway to the curb line; and

11. No mobile food establishment shall conduct business within the same park or within 500 feet, whichever is greater, of any special event authorized in accordance with section 9.59.030, any pavilion rental, any other city facility rental or any sporting event scheduled through the city Department of Parks, Recreation and Forestry for one hour prior to, during, or one hour after the event or other scheduled use or rental period, unless specifically requested by the event organizer or special event permit holder and such request is obtained in writing and kept in the mobile food establishment; and

12. No mobile food establishment shall use City water, electricity or other utilities in the course of its operations in accordance with this section.

Q. All business activity relating to the mobile food establishments in the public right-of-way shall be conducted from the curbside of the vehicle at all times.

R. The denial of a license under this section may be appealed to the administrative review board in accordance with chapter 1.06.

S. The penalty for violation of any provision in this section shall be a forfeiture of not less than $50.00 per day nor more than $500.00 per day for each violation, together with the cost of prosecution. (Ord. 7283, 2018; Ord. 7273, 2018; Ord. 7180, 2016)

13.12.070 Violation--Penalty. Any person, firm or corporation violating any provisions of this chapter, except as otherwise provided, shall upon conviction thereof, forfeit not less than five dollars, nor more than fifty dollars, together with the costs of prosecution and every day of violation shall constitute a separate offense. On default of payment of such forfeiture the violator so convicted shall be confined to the county jail of Eau Claire County for a term not exceeding thirty days unless such forfeiture and costs are sooner paid. (Prior code §5.18).

Chapter 13.16

MATERIALS ON STREETS

Sections:

13.16.010 Obstructing--Littering--Vegetation control.
13.16.020 Officers to cause removal.
13.16.030 Scattering papers unlawful.

13.16.010 Obstructing--Littering--Vegetation control. A. No person shall place, deposit or cast or cause to be placed, deposited or cast upon any street, alley, gutter, sidewalk or public ground within the city any grass clippings, leaves, ashes, rubbish, paper, snow or ice or anything or substance whatever which may obstruct any such street, alley, gutter, sidewalk or public ground, or impede, hinder or endanger travel thereon, or which shall or may injure or disfigure the same, or tend to the injury or disfigurement thereof, or tend to render the same unclean or a nuisance; nor shall any person cause or suffer any motor vehicle or other vehicle, or any box, crate, bale, package, merchandise or other thing to stand or be in or upon any such street, alley, sidewalk or public ground longer than may be actually necessary, under a penalty of up to fifty dollars for each and every offense.

B. No person shall permit any vegetation growing on premises owned or controlled by him to obstruct or impede, hinder or endanger travel upon any street, sidewalk, or alley under like penalty. (Ord. 4246 §4, 1982; Ord. 3936 §4, 1978; Ord. 3639, 1976; prior code §5.01).

13.16.020 Officers to cause removal. In case any timber, wood, lumber, rubbish or any substance or material whatever, mentioned in the foregoing section, shall be found remaining or lying upon any street, alley or sidewalk or public ground within the limits of the city in violation of the foregoing section it shall be the duty of the chief of police or any public officer forthwith to notify and require, by either written or verbal notice, any person or persons who may have placed or caused or permitted to be placed such substance or thing upon such street, alley, sidewalk or public ground, or who may be the owner or have the control of such timber, wood, lumber or other substance, or who may suffer the same to lie or remain upon such street, alley, sidewalk or public ground, to immediately remove such thing or substance, or cause the same to be removed therefrom, and in case such person or persons shall neglect or fail to remove or cause to be removed such substance or thing within twenty-four hours after being so notified, it shall be the duty of said police officers to remove the same or cause it to be removed from the street, alley, sidewalk or public ground to some convenient and safe place within the city at the expense of such person or persons, to be recovered in an action against him or them, to be prosecuted in the name of the city. (Prior code §5.02).

13.16.030 Scattering papers unlawful. A. No person, firm or corporation shall throw or distribute or cause to be thrown or distributed upon the streets, or alleys or public places within the limits of the city, or in or upon any places adjacent to any streets, alleys or public places, where the same can or may be misplaced, blown or be likely to be carried or placed upon any of the streets, alleys or public places within the city, any waste paper, card, pamphlet, advertising bill, poster or written or printed matter enclosed in an envelope, wrapper or other, or any other waste materials.

B. Any person, firm or corporation violating the provisions of this section shall be guilty of an offense and punished by a forfeiture of up to $500. (Ord. 4460, 1984; Prior code §5.03).

Chapter 13.20

MATERIALS ON SIDEWALKS

Sections:

13.20.010 Cleaning of snow and ice required.
13.20.020 Articles for delivery.

13.20.010 Cleaning of snow and ice required. A. The owner of every lot or parcel of land shall keep the public sidewalk adjacent to said premises reasonably free and clear from snow and ice and shall clear the snow from such sidewalk within twenty-four hours following a snowfall. Any owner violating the provisions of this section shall be subject to a forfeiture of not less than five dollars nor more than fifty dollars for each offense. Upon the failure of an owner to clear any sidewalk as required under this section, the City shall cause the sidewalk to be so cleared and shall cause the

cost thereof to be levied as a special tax chargeable to such lot or parcel of land to be collected like other taxes upon real estate, as prescribed in Wis. Stats. ss. 66.0627 or 66.0907.

B. "Sidewalk" as used in this chapter means any sidewalk, path, walk or way regularly used by pedestrians along any opened and established street and within the boundaries of such street. (Ord. 4262, 1982; Ord. 3599 (part), 1976; prior code §5.12).

13.20.020 Articles for delivery. A. It is lawful for any person to place and leave for a period not exceeding two hours on three feet of the outer edge of the sidewalk in front of his building or buildings any goods, wares or merchandise which he shall be in the act of receiving or delivering. This section shall only apply to sidewalks of ten or more feet in width. Any storage of material on a sidewalk for a period and on a space different than that permitted by this section shall be unlawful.

B. Any person, firm or corporation violating any of the provisions of this section shall, upon conviction thereof, be punished by a fine of not more than one hundred dollars nor less than ten dollars with the costs of prosecution. (Prior code §5.14).

Chapter 13.24

ENCROACHMENTS

Sections:

13.24.010 State statutes adopted.
13.24.020 Special privileges--Designated.
13.24.030 Special privileges--Applications.
13.24.040 Special privileges--Council action.
13.24.050 Special privileges--Mandatory conditions.
13.24.060 Special privileges--Optional conditions.
13.24.070 Applicability--Privilege holder responsibilities.
13.24.075 Neighborhood mailboxes permitted--Conditions.
13.24.080 Violations--Penalty.

13.24.010 State statutes adopted. Section 66.0425 of the Wisconsin Statutes, entitled "Privileges in Streets" and Section 86.04 of the Wisconsin Statutes, entitled "Highway Encroachments" are adopted by reference as fully as if herein set out verbatim. (Prior code §5.20(1)).

13.24.020 Special privileges--Designated. The following special privileges in streets and alleys in the city are encroachments and shall include, but not be limited to the following:

Stairs and steps; Sidewalk wells, chutes or openings; Street scales; Loading platforms; Overhanging fire escapes; Gas and/or oil pumps; Areas under or over streets or alleys; Other uses not specified. (Prior code §5.20(2)).

13.24.030 Special privileges--Applications. A. Property owners presently having or using any of the foregoing or any special privileges in streets or alleys or contemplating installing such, shall forthwith apply to the city council for authority to continue or install the same, as the case may be, on the terms and conditions hereinafter stated.

B. Such application shall be filed with the city clerk and shall describe the special privilege, its use, location and other pertinent and material facts as the council may deem necessary. (Prior code §5.20(3)).

13.24.040 Special privileges--Council action. The council may in its discretion grant or deny such application. If denied the council may, in the case of an existing use, order the same removed within thirty days pursuant to the terms, conditions and penalties provided for in Section 86.04 of the Wisconsin Statutes. In the event of a failure or refusal upon the part of the property

owner, the council may cause the removal thereof and assess the costs thereof to the property. (Prior code §5.20(5)).

13.24.050 Special privileges--Mandatory conditions. If said application is granted by the city council, it shall be granted only upon the following conditions:

A. By its acceptance the applicant shall become primarily liable for damages to person or property by reason of the granting of the privilege; be obligated to remove the same upon ten days' notice by the state of Wisconsin or the city; waive the right to contest in any manner the validity of this chapter or Section 66.0425 of the Wisconsin Statutes; waive the right to contest in any manner the amount of compensation charged for the granting of such privilege.

B. The applicant file a bond not exceeding ten thousand dollars running to the city and such third parties as may be injured, to secure the performance of the above stated conditions, said bond to be approved by the city council. (Prior code §5.20(5)).

13.24.060 Special privileges--Optional conditions. If said application is granted by the city council, it may, if the circumstances warrant, in addition:

A. Require that the applicant furnish proof that sufficient and proper public liability insurance is carried which will afford adequate protection to the city in connection with said privilege;

B. Require such alteration, reconstruction and safeguarding of any special privilege as it may deem to be necessary;

C. Require owners and/or contractors to execute waivers or agreements in favor of the city exonerating it from any liability for damages connected with the use of such special privilege, or caused by construction, operation or maintenance of such special privilege. (Prior code §5.20(6)).

13.24.070 Applicability--Privilege holder responsibilities. A. Compensation for the special privilege shall be paid into the general fund and be fixed by a board consisting of the director of engineering, the city attorney, and the city manager.

B. The holder of the special privilege shall be entitled to no damages for removal of the obstruction or excavation, and if he does not remove the same upon due notice, it shall be removed at his expense.

C. Third parties whose rights are interfered with by the granting of the privilege shall have right of action against the holder of the special privilege only.

D. This chapter shall not apply to public service corporations, or to cooperative associations organized under Chapter 185 of the Wisconsin Statutes to render or furnish telephone, gas, light, heat or power, but such corporations shall secure permit from the proper official for temporary obstructions or excavation in a highway and shall be liable for all injuries to person or property thereby.

E. This chapter does not apply to such obstruction or excavation for not longer than three months, and for which permit has been granted by the proper official.

F. Obstruction or excavation by a city or village in any street, alley or public place belonging to the city is included in this chapter. (Prior code §5.20(7)--(12)).

13.24.075 Neighborhood mailboxes permitted--Conditions. A. In this section, "Neighborhood delivery and collection box unit" means a centralized delivery mail receptacle serving more than a single postal service customer and which is provided for by the regulations of the U.S. Postal Service (Vol. 46, CFR No. 43, dated March 1, 1981).

B. Neighborhood delivery and collection box units may be allowed to be placed by the U.S. Postal Service within a street or alley, without following the procedures otherwise described in this chapter, at locations which are not materially detrimental to and do not endanger the use of the street or alley or any public utility facility and which are in accordance with the health, safety and welfare of the public, all as determined by the city engineer. (Ord. 4383 §1, 1983).

13.24.080 Violations--Penalty. Any person violating any of the provisions of this chapter shall, upon conviction thereof, be fined a sum not exceeding one hundred dollars together with costs of prosecution, and in default of payment thereof, be imprisoned in the county jail for not more than thirty days, unless such fine and costs are sooner paid. (Prior code §5.20(14)).

Chapter 13.28

STREET NAMES--HOUSE NUMBERING

Sections:

13.28.010 Street names--Council authority.
13.28.020 Street names--Hearing--Notice.
13.28.030 Street names--Changed by ordinance.
13.28.040 House numbering--According to map.
13.28.050 House numbering--Correcting existing numbers.
13.28.060 House numbering--Placement of numbers.
13.28.070 House numbering--Second floor.
13.28.080 House numbering--Duties of superintendent of inspections.
13.28.090 Violation--Penalty.

13.28.010 Street names--Council authority. The city council shall determine the names of streets and may change such names when, in its opinion, such change is for the public benefit and welfare. (Prior code §5.21(1)).

13.28.020 Street names--Hearing--Notice. A. Hearing. The council may on its own motion or upon a petition by any freeholder(s) order a hearing to consider such change(s), to be held at a time fixed by it at which time all persons interested may be heard.

B. Notice of Hearing. Notice of such hearing shall be published at least once in the official newspaper not less than seven days prior to such hearing. (Prior code §5.2(1), (3)).

13.28.030 Street names--Changed by ordinance. Change of street names shall be by ordinance. (Prior code §5.21 (4)).

13.28.040 House numbering--According to map. All lots and parts of lots and each of them in the city shall be numbered in accordance with a certain map now on file in the office of the superintendent of inspections which is designated "House Numbering Map". All lots and parts of lots hereafter platted shall be numbered to conform as nearly as possible to the general scheme of numbering as outlined on said map. (Ord. 4045 §I, 1980; Prior code §5.19(a)).

13.28.050 House numbering--Correcting existing numbers. A. The owner of any dwelling, tenement or building required by this chapter to be numbered, and which is not numbered or is incorrectly numbered shall cause the same to be numbered or renumbered, as the case may be, forthwith and not later than thirty days from the effective date hereof, and shall thereafter maintain the same, in compliance with this chapter.

B. It shall be the duty of each owner of any dwelling, tenement or building fronting upon any street, within thirty days from the effective date of the ordinance codified in this chapter, to properly number the same as herein provided and shall thereafter maintain the same. (Prior code §5.19(b)).

13.28.060 House numbering--Placement of numbers. A. All numbering shall be in numerals not less than two and one-half inches in height conspicuously placed immediately above, on or at the side of the front or main entrance door of each dwelling, tenement or building so that the number can be plainly seen from the street.

B. Any dwelling, tenement or building with an entrance, exit door or garage adjacent to an alley shall also conspicuously post numbers in numerals not less than two and one-half inches in height placed immediately above, on, or at the side of the entrance, exit door, or garage facing the alley. C. Whenever any structure is situated more than eighty feet from the street line, the number of such structure shall be conspicuously displayed at the street line, near the walk, driveway or common entrance thereto or upon the gate post, fence, tree, post or other

appropriate place so as to be easily discernible from the street. (Ord. 6932, 2010; Prior code §5.19(c)).

13.28.070 House numbering--Second floor. Where the second floor of a structure is separately occupied the same shall be given a one-half number in addition to the number of the first floor. In multiple dwellings numbering shall be as directed by the superintendent of inspections. (Ord. 4045 §2, 1980: Prior code §5.19(d)).

13.28.080 House numbering--Duties of superintendent of inspections. It shall be the duty of the superintendent of inspections to inform any party applying therefor, of the number(s) applicable to any lot(s) as provided by this chapter. The superintendent of inspections shall keep said "House Numbering Map" current, and the same shall be open to inspection of all persons at regular office hours. (Ord. 4045 §3, 1980; prior code §5.19(e)).

13.28.090 Violation--Penalty. If the owner of any dwelling, tenement or building required to be numbered or renumbered by this chapter neglects or fails to so do within said thirty-day period, the superintendent of inspections shall cause to be served upon such owner a notice requiring such owner to comply with this chapter, and if he neglects or fails to do so, he shall be deemed to have violated the same. Upon conviction thereof he shall forfeit not less than five dollars nor more than ten dollars together with the costs of prosecution and in default of payment thereof shall be imprisoned in the county jail not to exceed ten days, unless such fine and costs are sooner paid. Each day that a violation continues to exist shall constitute a separate offense. (Ord. 4045 §4, 1980: Prior code §5.19(f)).

Chapter 13.32

VACATION OF STREETS AND ALLEYS

Sections:

13.32.010 Utility reservation.
13.32.020 Vacation--Fee.

13.32.010 Utility reservation. A. Whenever the city council shall, by resolution, order any street or alley or any part thereof vacated, after due procedure, it shall be upon the condition that such vacated street or alley or part thereof be charged with a reservation of the right of the city or any public utility to enter upon the same to install, repair, maintain or relocate any public utilities or accessories. Said reservation of right shall apply to presently located utilities or any that may hereafter be installed.

B. Subsection A hereof shall apply to all street and alley vacations whether or not such resolution shall contain said reservation clause. (Prior code §5.22).

13.32.020 Vacation--Fee. The petition for the vacation and discontinuance of any street or alley within the city shall be filed in the office of the city clerk. The petitioner or petitioners shall at the time of filing the petition pay to the city clerk a filing fee as stated in the City of Eau Claire Fees and Licenses Schedule. Prior to the holding of any hearing thereon, the petitioner or petitioners shall make payment to the city in an amount equal to all costs incurred, or reasonably anticipated to be incurred, by the city in connection with the publication and service of notices and the filing of papers and documents in connection therewith. The filing fee previously paid shall be applied toward the payment of such costs. (Ord. 6363 §34, 2002; Ord. 4032, 1979).

Title 14

WATERWORKS

Chapters:

14.04 General Provisions
14.08 Connection and Installation
14.10 Wellhead Protection
14.12 Meters
14.16 Special Services
14.20 Rates and Billing

Chapter 14.04

GENERAL PROVISIONS

Sections:

14.04.010 Title.
14.04.020 Definitions.
14.04.025 Rules and regulations--General.
14.04.030 Water waste prohibited.
14.04.050 Connection and shutoff locations recorded.
14.04.060 Permits--Licensed plumbers only.
14.04.070 Violations--Penalty.
14.04.080 Damages--No claims.
14.04.090 Sprinkling ban authorized.
14.04.100 Well abandonment and well operation permit.
14.04.110 Lead Service Line Replacement.

14.04.010 Title. This title shall be known as "an ordinance revising the water rates and rules and regulations of the municipal water utility, Eau Claire, Wisconsin." (Ord. 3197 §I(part), 1970; Prior code §17.01).

14.04.020 Definitions. Whenever in this title the following words, clauses or terms are used they shall be construed to have the meaning herein defined, unless specifically otherwise stated:

A. "Water department" means the organization and operation of each and every part of the water works system.

B. "Council" means the city council of the city of Eau Claire, Wisconsin.

C. "Mains" means all pipes used for carrying water in the streets.

D. "Services" means the pipe extending from the main to the premises served.

E. "Office" means the office of the water department in the City Hall.

F. "Owner" means any person, firm, corporation or association owning property or premises which is or can be supplied with water, or his or their authorized agent.

G. "Agent." In the absence of instructions from the owner of any property or his duly authorized agent to the contrary, the occupant of any premises shall be recognized as the owner's agent, insofar as his relations to the water department be concerned.

H. “Residential Class” includes customers who have water service provided for residential or domestic purposes and sales through a single meter to buildings with three or more dwelling units.

I. “Nonresidential Class” includes commercial, industrial, and public authority customers. Commercial customers include business entities and institutions, except governmental entities, that provide goods or services. Churches and parochial schools are classified as commercial. Industrial customers include customers who are engaged in the manufacture or production of goods. Public Authority customers include any department, agency, or entity of local, state, or federal government, including public schools, colleges, and universities.

J. "Premises" means a single-family dwelling, a two family dwelling, an apartment house occupied by more than one family, a building occupied for business or other purposes, or any part of a building with the land appurtenant thereto when sold as a separate unit.

K. "Unit of service" shall consist of any residential or small commercial aggregation of space or area occupied for a distinct purpose such as a residence, apartment, flat, store or office which is equipped with one or more fixtures for rendering water service, separate and distinct from other users.

L. "Customer" shall be construed to mean the owner of the property.

M. "Customer service" means that portion of the service lateral that is between the curb box and the premises being served by the water utility.

N. "Utility service" means that portion of the service lateral from the public water main through the curb box which is the property of the utility, or to the property line if no curb box exists.

O. "Service lateral" means the combined utility and customer service which extends from the public water main through the meter, or to a point of 2 feet outside the building if no meter exists.

P. "Superintendent" means the city utilities administrator or his or her designee.

Q. "Cross connection" shall be defined as any physical connection or arrangement between two otherwise separate systems, one of which contains potable water from the city of Eau Claire water system, and the other, water from a private source, water of unknown or questionable safety, or steam, gases, or chemicals, whereby there may be a flow from one system to the other, the direction of flow depending on the pressure differential between the two systems. (Ord. 7085, §1, 2014; Ord. 4716, §1, 1987; Ord. 4423 §1, 1984; Ord. 3395 §I, 1973; Ord. 3197 §I(part), 1970).

14.04.025 Rules and regulations--General. A. All persons now receiving a water supply from the Eau Claire municipal water utility, or who may hereafter make application therefor, shall be considered as having agreed to be bound by the rules and regulations as filed with the Public Service Commission of Wisconsin.

B. Application for water service shall be made in writing on a form furnished by the water utility (utility's water service tap permit). The application will contain the legal description (parcel number) of the property to be served, the street number, name of owner, the exact use to be made of the service, and the size of the supply pipe. The meter size shall be determined by the water demand.

Service will be furnished only if:

1. Premises abut a designated street or public strip in which a cast iron or other long-life water main has been laid, or where property owner has agreed to and complied with the provisions of the utility's filed main extension rule;

2. Property owner has installed or agrees to install a service pipe from the utility service to the point of use and laid not less than 7½ feet below the surface of an established or proposed grade, or otherwise insulated in a manner approved by the utility;

3. Premises have adequate piping beyond metering point.

C. The owner of a multi-unit dwelling has the option of being served by individual metered water service to each unit. The owner, by selecting this option, is required to provide interior plumbing and meter settings to enable individual metered service to each unit and individual disconnection without affecting service to other units. Each meter and meter connection will be a separate water utility customer for the purpose of the filed rules and regulations.

D. Every building equipped with plumbing fixtures and used for human occupancy or habitation shall be provided with a potable supply of cold water. The owner of any such building within the jurisdiction of the city, wherein water service is readily available, is required, at the owner's expense, to connect such plumbing facilities directly to the public water distribution system in accordance with the provisions of this chapter within one (1) year after the water service is deemed available by the director of community services or designee. Such time may be extended upon specific written authorization from the director of community services or designee in the event of unfavorable weather conditions, except when an imminent health hazard exists.

E. If any person fails to connect to the municipal water distribution system within the time contained in the city code or in the manner prescribed by the plumbing code for more than 10 days after notice in writing, the city may cause connection to be made, and the expense thereof assessed as a special tax against the property in accordance with Wisconsin Statutes s. 281.45. The owner

may, within 30 days after completion of the work, file a written option with the city clerk stating that he or she cannot pay the amount in one sum and asking that it be levied in not to exceed five (5) equal annual installments, and the amount shall be collected with interest at a rate of 6% per year from the completion of the work. The unpaid balance of the special tax shall be placed as a special tax lien on the property.

F. No water service shall pass under or through a building to serve another building.

G. The superintendent is hereby empowered to withhold approval of any application wherein full information of the purpose of such supply is not clearly indicated and set forth by the applicant property owner. (Ord. 7202, 2016; Ord. 6740, 2006; Ord. 6212 §1, 2001; Ord. 4423 §2, 1984).

14.04.030 Water waste prohibited. Excessive or unnecessary use of, or waste of water, whether caused by carelessness or defective or leaking plumbing, is strictly prohibited. (Ord. 3197 §I(part), 1970).

14.04.050 Connection and shutoff locations recorded. It shall be the duty of the plumbing inspector to locate by measurement each service connection and each curb shutoff, referring the same to some suitable permanent building or street line. This information shall be entered on the records of the department. (Ord. 3197 §I(part), 1970).

14.04.060 Permits--Licensed plumbers only. To protect the city and property owners, permits for laying of service laterals will be issued only to plumbers licensed in the State of Wisconsin, unless the work is done by the utility. It shall be the duty of the plumbing inspector to supervise the installation of laterals and require said work and materials to be in accordance with plumbing regulations in the city ordinance. It shall further be the duty of the plumbing inspector to locate by measurement each service lateral connection and each curb shutoff with reference to some suitable permanent building or street line. This information shall be entered on the records of the utility. (Ord. 4423 §3, 1984).

14.04.070 Violations--Penalty. The water department may at its discretion shut off the water from any premises where the owner or agent of the owner is found guilty of violating any of the provisions of this title, upon giving the owner or agent at least twenty-four hours' written notice of such intended action. In addition to this any person guilty of violating the provisions of this title shall be liable to a fine not exceeding one hundred dollars, and costs. In default of payment, imprisonment in county jail for a period not to exceed ninety days. Each day or part thereof during which such violation continues shall constitute a separate offense. (Ord. 3197 §I(part), 1970; Prior code §7.22).

14.04.080 Damages--No claims. A. No person using water shall enter a claim against the city as a water utility or any officer thereof, for damages to any fixtures or appurtenance by reason of interrupted water supply or variation of pressure, or for damage of any nature caused by turning off or on, either partially or entirely, of the water supply for any premises, either for the repairs or alterations of any water main, or for the discontinuance of the service to his or their premises for violation of any rule or regulation of the water department. No claims will be allowed against the utility or the city on account of interruption of supply caused by breaking of pipes or by stoppage for repairs or fire or other emergency.

B. In case of a probable stoppage of water supply when time of interruption can be forecast, every reasonable attempt will be made by the water department to acquaint the users with the action proposed.

C. The utility shall not be liable for failure to locate the curb box and to shut off the water in case of a leak on the customer's premises. (Ord. 4423 §4, 1984; Ord. 3197 §I(part), 1970).

14.04.090 Sprinkling ban authorized. A. Whenever, in the judgment of the city manager or the city manager's designee, an emergency exists due to a shortage of available water supplies for fire-fighting and other municipal purposes, or which may be detrimental to the water system or may cause damages thereto, or which may result in certain areas of the city being deprived of water, the city manager or designated individual may declare a temporary ban upon the watering or sprinkling of lawns, trees, shrubs or other similar vegetation until adequate water supplies are restored. Such ban

may include the regulation or prohibition of all such watering or sprinkling throughout the entire city or within designated parts of the city, the regulation or prohibition of such watering or sprinkling during specified hours or on alternate sides of streets on specified days, or may include other prohibitions or regulations reasonably related to the conservation of water during the emergency.

B. Such ban shall become effective upon giving actual notice thereof to any person, or upon the giving of notice thereof to the official city newspaper and other local news media and the printing, broadcast or transmission thereof by any or all of said news media to the public.

C. Exceptions to such sprinkling ban may be granted, upon application, by the city manager or designated individual, for properties having newly seeded or sodded lawns or newly planted vegetation, upon a finding that failure to grant such an exception would jeopardize such lawn or vegetation. Appropriate conditions or limitations may be included in the granting of such exception, in keeping with the purpose of this section, and the grantee shall comply with all such conditions and limitations.

D. Any person violating any provision of this section shall, upon conviction thereof, forfeit not more than fifty dollars, together with costs of prosecution. Each day during which a violation continues shall be considered to be a separate offense. (Ord. 3641, 1976).

14.04.100 Well abandonment and well operation permit. A. Purpose. This ordinance is adopted to protect public health, safety, and welfare, and to prevent contamination of groundwater by assuring that unused, unsafe, or noncomplying wells, or wells which may act as conduits for contamination of groundwater, or wells which may be illegally cross-connected to the municipal water system are properly maintained or abandoned.

B. Applicability. This ordinance applies to all wells located on premises served by the city of Eau Claire municipal water system.

C. Abandonment required. All wells on premises served by the municipal water system shall be properly abandoned in accordance with subsection E. of this ordinance no later than 90 days from the date of connection to the municipal water system, unless a valid well operation permit has been issued to the well owner by the city of Eau Claire under terms of subsection D. of this ordinance.

D. Well operation permit. Owners of wells on premises served by the municipal water system wishing to retain their wells for any use shall make application to the city clerk for a well operation permit for each well no later than 90 days after connection to the municipal water system. The city of Eau Claire shall only grant a permit to a well owner to operate a well for a period not to exceed five years if all conditions of this section are met. A well operation permit shall be issued or renewed after an application has been submitted verifying that the conditions of this section are met. The Eau Claire city-county health department, the city of Eau Claire, or its agent, shall conduct inspections and water quality tests, or require inspections and water quality tests to be conducted at the applicant's expense to obtain or verify information necessary for consideration of a permit application or renewal. The permit will expire on September 30th no later than five years from the date of issuance. The following conditions must be met for issuance or renewal of a well operation permit:

1. The well and pump installation shall meet the Standards for Existing Installations described in s. NR 812.42, Wisconsin Administrative Code.

2. The well and pump shall have a history of producing safe water evidenced by at least one coliform bacteria sample. In areas where the Department of Natural Resources has determined that groundwater aquifers are contaminated with substances other than bacteria, additional chemical tests may be required to document the safety of the water.

3. There shall be no cross-connections between the well's pump installation or distribution piping and the municipal water system.

4. The water from the private well shall not discharge into a drain leading directly to a public sewer utility unless properly metered and authorized by the sewer utility.

5. The private well shall have a functional pumping system.

6. The proposed use of the private well shall be justified as a reasonable addition to water provided by the municipal water system.

7. Payment of a fee as stated in the City of Eau Claire Fees and Licenses Schedule.

E. Abandonment procedures. All wells abandoned under the jurisdiction of this ordinance shall be done according to the procedures and methods of s. NR 812.26, Wisconsin Administrative Code. All debris, pumps, piping, unsealed liners, and any other obstructions which may interfere with

sealing operations shall be removed prior to abandonment. The owner of the well or the owner's agent shall notify the Eau Claire city-county health department at least 48 hours in advance of any well abandonment activities. The abandonment of the well may be observed or verified by city of Eau Claire or Eau Claire city-county health department staff. An abandonment report form, supplied by the Department of Natural Resources, shall be submitted by the well owner to the Eau Claire city-county health department within 30 days of the completion of the well abandonment.

F. Penalties. Any well owner violating any provision of this ordinance shall, upon conviction, be punished by forfeiture of not less than $500, nor more than $1,000, plus the cost of prosecution. Each day of violation is a separate offense. If any person fails to comply with this ordinance after written notice of the violation is either mailed to or posted at the property, the municipality may impose a penalty hereunder, declare the property a public nuisance, and cause the well abandonment to be performed and the expense to be assessed as a special charge against the property. (Ord. 6848, 2008).

14.04.110 Lead Service Line Replacement. A. Purpose. The city council finds it in the public interest and for the protection of public health, safety, and welfare to establish a comprehensive program for removing and replacing all lead service lines within and connected to the city's water service. Lead service lines have the potential to leach lead into drinking water; in particular, the disturbance or reconnection to an existing lead service line may increase lead levels in drinking water. The city's water service is an interconnected system and lead in any service line is a potential contaminant throughout the system. There is no safe level of exposure to lead and lead in drinking water has been determined to cause health problems in young children, pregnant women and their unborn children, and is also potentially harmful to adults.

B. Definitions. The following definitions shall apply to this section, in addition to those terms defined in Section 14.04.020 of this Chapter:

1. Customer-side service line. The property owner's water service line, from the outlet of the curb stop to the inlet of the customer's water meter.

2. Eligible lead service line. A customer-side water service line that contains lead, for which the service lateral or main has already been replaced, or is in the process of being replaced.

3. Lead service line. A water service line constructed of lead. This term includes the customer-side service line, mains, and service laterals.

4. Property. Real property as defined in Wis. Stats. s. 70.03.

5. Property owner. A person or legal entity having a possessory interest, legal or equitable, in property which shall include an estate, trust or lien.

6. Plumbing contractor. A person, firm, corporation or other entity licensed by the state of Wisconsin to perform plumbing work in the city.

C. Connection prohibited. No person shall connect a customer-side lead service line to a non-lead service lateral.

D. Lead service line replacement requirement. All eligible lead service lines connected to city water service shall be replaced with water service laterals made of material approved by the city, at the property owner's expense or through available financial assistance for customer-side lead service line replacements, in accordance with the requirements of this section.

E. Identification of lead service lines. For city projects involving water mains or replacement of service laterals, property owners affected by the city project shall be notified in writing at least 30 days prior to commencement of construction. The director of community services or her or his designee shall inspect all connections to the mains for the presence of lead prior to, if possible, or at the time that the mains are to be reconstructed and if unable to gain access for inspection, may pursue an inspection warrant or any other steps necessary to conduct the inspection, and shall collect the cost therefor from the property owner, including by imposition of a special charge.

F. Customer-side lead service line replacements.

1. In the event that a customer-side service line is found to contain lead, the director of community services or her or his designee shall immediately notify the property owner, in writing, of that fact, whether it is an eligible lead service line, and available funding options. The director of community services or her or his designee shall further provide information to the

affected property owner regarding an effective flush of all water lines within the affected property. The affected property owner shall provide proof of arrangements for replacement of the eligible lead service line to the director of community services or her or his designee within 30 days of the date of the notification letter.

2. Replacement of eligible lead service lines shall be completed either in conjunction with the replacement of the city's side of the water service during a utility replacement project, or if the city's side has already been replaced, shall be replaced within 90 days of notice to the property owner of the presence of lead.

G. Financial assistance for customer-side lead service line replacements.

1. Customers may apply for financial assistance for lead service line replacement through any available grant source, including those funds provided through the State of Wisconsin's Safe Drinking Water Loan Program.

2. The city may provide financial assistance for customer-side lead service line replacements in the form of grants, loans, or other funding sources. Funds shall be paid directly to the plumbing contractor on behalf of the property owner. The total amount of the funds provided shall not exceed the actual cost of replacement of the customer-side lead service line.

H. Penalty. Failure to commence work on the replacement of the customer-side lead service line when required pursuant to this ordinance, or for such work to be completed within a reasonable time after commencement of the work, may result in a citation to the property owner of at least sixty dollars and no more than five hundred dollars for each day of the violation, together with the costs of prosecution. (Ord. 7357, 2020).

Chapter 14.08

CONNECTION AND INSTALLATION

Sections:

14.08.010 Pipes and mains--Property of utility.
14.08.020 State statutes adopted.
14.08.030 Installation--Application.
14.08.040 Installation--General.
14.08.050 Installation--Cost assessment.
14.08.060 Single premises service connections.
14.08.065 Water service pipes--Depth.
14.08.070 Service alteration.
14.08.080 Discontinuance--Permanent or temporary.
14.08.085 Vacation of premises.
14.08.090 Repairs--Leaks and deteriorated connections.
14.08.095 Repairs to mains.
14.08.100 Shutoff valves--Required--Maintenance.
14.08.105 Protective devices.
14.08.110 Stop and waste.
14.08.115 Cross connections.
14.08.120 Street repairs.
14.08.130 Private fire protection.
14.08.140 Service outside corporate limits.
14.08.150 Water main installation in platted subdivision.

14.08.010 Pipes and mains--Property of utility. The large pipes or mains which, in general, are laid in streets and alleys and distribute water throughout the city are the property of the utility and are maintained by the utility. No person except an authorized employee of the water department shall be permitted to operate any valves or hydrants in connection with the system, or to tap said main for connection purposes, except by permission of the superintendent of the department.

Members of the fire department in discharge of their duties will use the hydrants. (Ord. 3179 §I(part), 1970; Prior code §7.03(a)).

14.08.020 State statutes adopted. Section 66.0701, et seq., Wisconsin Statutes, and acts amendatory thereto, relating to special assessments for laying of water mains is adopted and made a part of these regulations. (Ord. 6212 §2, 2001; Ord. 3179 §I(part), 1970; Prior code §7.03(b)).

14.08.030 Installation--Application. A. All applications for the installation of services for water must be made at the office of the water department prior to performance of work by the owner or a licensed plumber, who will be considered as the authorized agent of the owner.

B. The application shall state the ownership of the premises to be served, the legal description of the property, the street number, size or service and other pertinent data. (Ord. 3197 §I(part), 1970; Prior code §7.04(b)).

14.08.040 Installation--General. A. Services may be laid upon application of owner of premises by a licensed plumber, and the council may cause a service to be laid into every lot or parcel of land before the street is permanently improved. In the latter case, this improvement will be made and cost assessed against the property in accordance with Section 66.0701, et seq., Wisconsin Statutes, and acts amendatory thereto.

B. Water mains will be extended for new customers on the following basis:

1. Where the cost of the extension is to immediately be collected through assessment by the municipality against the abutting property, the procedure set forth under Section 66.0701, et seq. of the Wisconsin Statutes will apply, and no additional customer contribution to the utility will be required.

2. Where the municipality is unwilling or unable to make a special assessment, then extension will be made on a customer-financed basis as follows:

a. The applicant or applicants will advance as a contribution in aid of construction the total amount equivalent to that which would have been assessed for all property under subdivision (1) of this subsection.

b. Part of the contribution required in paragraph (a) of this subdivision will be refundable. When additional customers are connected to the extended main within ten years of the date of completion, contributions in aid of construction will be collected equal to the amount which would have been assessed under subdivision (1) for the abutting property being served. This amount will be refunded to the original contributor or contributors. In no case will the contributions received from additional customers exceed the proportionate amount which would have been required under subdivision (1) nor will it exceed the total assessable cost of the original extension.

3. When a customer connects to a transmission main or connecting loop installed at utility expense within 10 years of the date of completion, there will be a contribution required of an amount equivalent to that which would have been assessed under section B1. (Ord. 7085 §2, 2001; Ord. 6212 §3, 2001; Ord. 3793 §1, 1977; Ord. 3197 §I(part), 1970; Prior code §7.04(b)).

14.08.050 Installation--Cost assessment. The expense of laying service pipes, and connecting such service pipes to the main shall be charged to and made a lien upon the real estate or premises served by such service pipes. In case it may be proved necessary to replace the service pipe with a larger service, this cost shall also be an expense against the property served. (Ord. 3197 §I(part), 1970; Prior code §7.04(a)).

14.08.060 Single premises service connections. Any permit given for water service shall require that not more than one premises be served by one connection. Whenever a service has to be replaced, or where permanent street improvements are authorized and conditions contrary to above rule exist, they shall be corrected. (Ord. 3197 §I(part), 1970; Prior code §7.04(d)).

14.08.065 Water service pipes--Depth. Water service pipes shall be installed at a depth of not less than seven and one-half feet, unless otherwise approved by the city engineer. (Ord. 7085 §3, 2014; Ord. 4173 §2, 1981).

14.08.070 Service alteration. No addition or alteration to service already laid shall be changed or added to, or meter moved without notification to the water department. (Ord. 3197 §I(part), 1970; Prior code §7.04(e)).

14.08.080 Discontinuance--Permanent or temporary. Whenever a building receiving water service is proposed to be razed or removed and the water superintendent finds that the property will not require water service after such razing and removal and within a reasonable period of time thereafter he shall require the permittee under the razing or removal permit to shut off water service to the property at the corporation shutoff at the main under Section 14.08.100, after first obtaining approval to do so under Section 14.08.100. Such requirement when made by the water superintendent shall be a condition of the razing or removal permit. (Ord. 3197 §I(part), 1970; Prior code §7.04(f)).

14.08.085 Vacation of premises. When premises are to be vacated, the utility shall be notified at once, so that it may remove the meter and shut off the supply at the curb stop. At the decision of the utility, the meter may or may not be removed from the premises.

The owner of the premises shall be liable to prosecution for any damage to the property of the water utility by reason of failure to notify the utility of vacancy.

When a tenant-customer vacates a premises, he or she shall notify the utility at least 10 working days prior to vacating. The tenant-customer must also notify the owner who is ultimately responsible for payment of all bills (Section 66.069 Wis. Statutes). (Ord. 4423 §5, 1984).

14.08.090 Repairs--Leaks and deteriorated connections. A. If a customer fails to repair a leaking or broken service pipe from the curb stop and/or property line to point of metering or use within 5 days after receiving notification from the water utility that his service requires repair, the water will be shut off and will not be turned on again until the repairs have been completed.

The water utility may disconnect without notice where a dangerous condition exists for as long as the condition exists.

B. In cases where the owner is ordered by the utility to replace or repair a damaged, deteriorated or malfunctioning service lateral and the owner fails to comply within 10 days of receiving notice, the utility may discontinue water service to his property, and the cost of such discontinuance shall be charged and assessed against said property. (Ord. 4423 §6, 1984; Ord. 3197 §I(part), 1970).

14.08.095 Repairs to mains. A. The utility reserves the right to shut off the water in the mains temporarily, to make repairs, alterations or additions to the plant or system. When circumstances will permit, the utility will give notification, by newspaper publication or otherwise, of the discontinuance of the supply.

B. No rebate will be allowed to customers for such temporary suspension of supply. Nor will any claims be allowed against the utility or the city for damages caused by the interruption of water supply, variation of pressure, or turning off or on (either partially or entirely) the water supply to any premises due to the use of water for fire-fighting or other emergency, the breaking of pipes or the repairs or alterations to the water plant or system. (Ord. 4423 §7, 1984).

14.08.100 Shutoff valves--Required--Maintenance. Each service lateral shall be controlled by a corporation shutoff at the main and, if the service is smaller than 3 inches, a curb shutoff at or near the curb is also required. These valves are under the sole and absolute control of the utility and must not be operated by others without permission of the utility, except that a plumber may turn on the water for testing purposes, but only with consent in each case. (Ord. 4423 §8, 1984; Ord. 3395 §II, 1970; Ord. 3197 §I(part), 1970).

14.08.105 Protective devices. A. In general. The owner or occupant of every premise receiving water supply shall apply and maintain suitable means of protection of the premise supply, and all appliances thereof, against damage arising in any manner from the use of the water supply, variation of water pressure, or any interruption of water supply. Particularly, such owner or occupant must protect water cooled compressors for refrigeration systems by means of high pressure safety cutout devices. There shall likewise be provided means for the prevention of the transmission of

water ram or noise of operation of any valve or appliance through the piping of their own or adjacent premises.

B. Relief valves. On all "closed systems" (i.e., systems having a check valve, pressure regulator, or reducing valve, water filter or softener), an effective pressure relief valve shall be installed either in the top-tapping or the upper side tapping of the hot water tank, or on the hot water distributing pipe connection at the tank. No stop valve shall be placed between the hot water tank and the relief valve or on the drain pipe.

C. Air chambers. All water supply systems, water distribution systems and components connected thereto, subject to water hammer, shall be provided with approved shock absorbing devices located and sized to suppress water hammer. All appliances, devices, equipment, fixtures and appurtenances with quick closing valves or which may create water hammer, shall be provided with shock absorbing devices. When copper air chambers are used, the minimum size shall be ½" x 1" x 14".

The size and location of the mechanical suppressors shall be in accord with the hydraulic design of the piping system served and to the manufacturer's recommendations. All mechanical water hammer suppressors shall be accessible. (Ord. 4423 §9, 1984).

14.08.110 Stop and waste. All service connections shall be provided with an approved stop and waste where it enters the building, for use in draining the systems. All services shall have a shutoff valve on both sides of meter. All water meters two inches or more in diameter shall be provided with a suitable valved and sealed bypass, having a diameter or no less than one inch smaller than the service entrance, which can be utilized in the event of removal, repair or changing of such meter. (Ord. 3395 §III, 1973; Ord. 3197 §I(part), 1970).

14.08.115 Cross connections. A. No person shall establish or permit to be established or maintain or permit to be maintained any cross connection. No interconnection shall be established whereby potable water from a private, auxiliary or emergency water supply other than the regular public water supply of the city of Eau Claire may enter the supply or distribution system of said municipality, unless such private, auxiliary or emergency water supply and the method of connection and use of such supply has been approved by the city of Eau Claire water utility and by the Wisconsin Department of Natural Resources in accordance with s. NR 810.15, Wisconsin Administrative Code.

B. The utilities division of the city of Eau Claire shall cause inspections to be made of all properties served by the public water system where cross connections with the public water system are deemed possible. The frequency of inspections and reinspections, based on potential health hazards involved, shall be as established by the utilities division of the city of Eau Claire and as approved by the Wisconsin Department of Natural Resources. Public educational materials, when being provided in lieu of low hazard inspections, shall be provided to the customers at least every three (3) years, and with every cross connection survey. Residential and low risk commercial customers with meter sizes 5/8", 3/4", or 1" shall be inspected every ten (10) years. Residential and low risk commercial customers with meter sizes 1½" and 2" shall be inspected every four (4) years. All high risk commercial, industrial and public authority customers shall be inspected every two (2) years. It shall be the responsibility of the high risk commercial, industrial and public authority property owner to have the inspection completed within the specified time.

C. Upon presentation of credentials, the representative of the utilites division shall have the right to request entry at any reasonable time to examine any property served by a connection to the public water system of the city of Eau Claire for cross connections. If entry is refused, such representative shall seek to obtain a special inspection warrant under s. 66.0119, Wisconsin Statutes. On request, the owner, lessee, or occupant of any property so served shall furnish to the city any pertinent information regarding the piping system or systems on such property.

D. The city of Eau Claire water utility is hereby authorized and directed to discontinue water service to any property wherein any connection in violation of this section exists, and to take such other precautionary measures deemed necessary to eliminate any danger of contamination of the public water system. Water service shall be discontinued only after reasonable notice and opportunity for hearing under Chapter 68, Wisconsin Statutes, except as provided in subsection E. Water service to such property shall not be restored until the cross connection or connections have been eliminated in compliance with the provisions of this section.

E. If it is determined by the city of Eau Claire water utility that a cross connection or an emergency endangers public health, safety, or welfare and requires immediate action, and a written finding to that effect is filed with the clerk of the city of Eau Claire and delivered to the customer's premises, service may be immediately discontinued. The customer shall have an opportunity for hearing under Chapter 68, Wisconsin Statutes, within 10 days of such emergency discontinuances.

F. That the city of Eau Claire adopts by reference the State Plumbing Code of Wisconsin being Chapters, SPS 382, 383, and 384, Wisconsin Administrative Code.

G. This section does not supersede, but is supplementary to, the State Plumbing Code and the city of Eau Claire plumbing ordinances contained in Title 14. (Ord. 7123, 2015; Ord. 6212 §4, 2001; Ord. 4716 §2, 1987; Ord. 4423 §10, 1984).

14.08.120 Street repairs. A. When services are laid on an improved street or highway, in addition to the regular charge the premises served shall pay the cost of repairing said opening in the street at rates established by the city council, and on file with the plumbing inspector.

B. Trenches in streets shall be refilled with earth and mechanically tamped in 12-inch lifts until the street grade is reached, and to the satisfaction of the utility. (Ord. 5903 §1, 1998; Ord. 4423 §11, 1984; Ord. 3197 §I(part), 1970).

14.08.130 Private fire protection. Private fire protection service laterals to supply water to sprinkler systems or private fire hydrants will be permitted only upon application of the owner after detailed plans showing sizes and location of all pipes, valves, hydrants and sprinkler heads have been filed with and approved by the superintendent. Owners and insurance inspectors may test private fire hydrants and apparatus in the presence of the superintendent or an inspector assigned for such purposes. No charge shall be made for water used for private charges for these services. (Ord. 4423 §12, 1984; Ord. 3197 §I(part), 1970).

14.08.140 Service outside corporate limits. A. In order to provide adequate fire protection for persons and property within the corporate limits of the city of Eau Claire and to ensure the public health and safety of the residents, and for conserving the available water supply, it is necessary to limit unincorporated areas served to those previously served, specifically:

1. 8 properties in the 2500 block of Paulina Street and;
2. 7 properties in the 2500 and 2600 blocks of Crescent Avenue;
3. Properties formerly part of the Washington Heights Sanitary District and located outside the City of Eau Claire, now part of the water utility of the City of Eau Claire, effective as of January 1, 1984, pursuant to Agreement of the Washington Heights Sanitary District and the water utility of the City of Eau Claire and Order of the State of Wisconsin Public Service Commission, dated October 27, 1983, copies of such documents being on file in the office of the city clerk and open to public inspection during normal business hours.

The foregoing shall apply to any other sites or locations already so served but not herein enumerated.

B. Although the city has heretofore provided service to the aforesaid areas and sites, such service shall not be construed as a holding out or an offer by the city to furnish water beyond its corporate limits.

The city reserves the right to further limit such areas, should such further action be necessary.

C. Only in exceptional cases and when authorized by the city council by ordinance, may water service be furnished to consumers outside the city limits. The applicant for such service shall state fully all of the conditions affecting such usage, shall fully comply with all the requirements as to plumbing, safeguarding and use applicable to users of water within the city limits, and shall, if required by the council, pay for service and water in advance.

D. In such cases the water rates stated in the City of Eau Claire Schedule of Fees and Licenses shall be applied.

E. Mains or services laid and the installation thereof outside the city limits shall be in accordance with the specifications of and under the supervision of the water department, and be approved thereby, and expense thereof shall be a part of the cost of such main. Maintenance of such

mains or services shall conform to general city requirements. (Ord. 7425 §1, 2021; Ord. 5903 §1, 1998; Ord. 4445, 1984; Ord. 4423 §15, 1984; Ord. 3179 §I(part), 1970).

14.08.150 Water main installation in platted subdivisions. A. Application for installation of water mains in regularly platted real estate development subdivisions shall be filed with the city clerk and shall set forth the following information:

1. Name of subdivision;
2. Legal description;
3. Map showing street, lots and sizes of proposed mains and hydrants, and street laterals;
4. Date of approval of subdivision plan by the state;
5. Date of approval of proposed mains by Department of Natural Resources;
6. Number of houses presently under construction.

B. Upon receipt of the application, the department of community services shall develop plans for the extension of mains together with the installation of service laterals and hydrants required to adequately serve the area and provide public fire protection. The water utility will prepare detailed estimates of the cost of extending water mains and hydrants of the size deemed necessary in the subdivision and submit the same to the city council for approval of the extension as it pertains to public fire-protection service requirements.

C. The applicant for water service to be supplied to a subdivision shall be required to advance to the utility, prior to the beginning of the construction, the total estimated assessable cost of the extension. In the event several property owners are involved, they shall confer so that the advance payment is properly distributed among them. If the final costs exceed estimated costs, an additional billing will be made for the balance of the cost due. This balance is to be paid within thirty days. If final costs are less than estimated, a refund of overpayment will be made by the water utility.

D. In a regularly platted subdivision, the subdivider or developer will already have graded the streets in the subdivision or have posted a bond stating that the streets will be graded within a two-year period. (Ord. 7202, 2016; Ord. 4423 §§16, 17, 1984; Ord. 3793 §2, 1977).

Chapter 14.10

WELLHEAD PROTECTION

Sections:

14.10.010 Purpose.
14.10.020 Authority.
14.10.030 Application.
14.10.040 Definitions.
14.14.050 Groundwater Protection Overlay District Boundaries.
14.10.060 Permitted Uses.
14.10.070 Separation Distance Requirements.
14.10.080 Prohibited Uses.
14.10.090 Conditional Uses.
14.10.100 Requirements for Existing Facilities.
14.10.110 Enforcement and Penalty.

14.10.010 Purpose. The residents of the City depend exclusively on groundwater for a safe drinking water supply. Certain land use practices and activities can seriously threaten or degrade groundwater quality. The purpose of this Wellhead Protection Ordinance is to institute land use regulations and restrictions protecting the municipal water supply of the City and promote the public health, safety and general welfare of the residents. (Ord. 7204, 2016)

14.10.020 Authority. This chapter is created to protect the health, safety and welfare of the citizens of the City of Eau Claire and members of the public relying upon the provision of safe

municipal drinking water and further upon express statutory authority established by the Wisconsin Legislature in 1983, Wisconsin Act 410, which specifically added groundwater protection, in §62.23(7)(c), Wis. Stats., to the statutory authorization for municipal planning and zoning to encourage the protection of groundwater resources, and the public health, safety and welfare. (Ord. 7204, 2016)

14.10.030 Application. The provisions specified in this Wellhead Protection Ordinance shall apply to the incorporated areas of the City, and also those areas outside the incorporated boundary of the City where extended by cooperative agreement, that lie within the recharge areas for municipal water supply wells as that area is defined in s. 14.10.040, and are in addition to the requirements in the underlying zoning district, if any. If there is a conflict between this ordinance and the Zoning Code, Title 18, of the Code of Ordinances of the City of Eau Claire, the more restrictive provision shall apply. (Ord. 7204, 2016)

14.10.040 Definitions. For purposes of this chapter, the following terms have the meaning indicated:

A. "Aquifer" means a saturated, permeable geologic formation that contains and will yield significant quantities of water.

B. "Cone of depression" means the area around a well, in which the water level has been lowered at least one of a foot by pumping of the well.

C. "Groundwater Protection Overlay District" means that portion of the recharge area equivalent to a 5-year time of travel to the well field plus the area within the buried valley containing sand and gravel deposits that transmit water to the City wells with boundaries normalized to road centerlines, railways, surface water features, and the public land survey section lines, 1/2, 1/4, 1/8, or 1/16 section lines, as more specifically described in Section 14.10.050 below.

D. "Municipal water supply" means the municipal water supply of the City of Eau Claire.

E. "Person" means an individual, partnership, association, corporation, municipality or state agency, or other legal entity.

F. "Recharge area" means the area which encompasses all areas or features that, by surface infiltration of water that reaches the zone of saturation of an aquifer, supplies groundwater to a well.

G. "Well field" means a piece of land used primarily for the purpose of locating wells to supply a municipal water system.

H. "Zone of saturation" means the saturated zone is the area of unconsolidated, fractured or porous material that is saturated with water and constitutes groundwater. (Ord. 7204, 2016)

14.10.050 Groundwater Protection Overlay District Boundaries. A. The boundaries of the Groundwater Protection Overlay District shall be shown on the zoning map. The locations and boundaries of the zoning districts established by this ordinance are set forth on the City Municipal Wellhead Protection Areas Map which is incorporated herein and made a part of this ordinance. A detailed map shall be on file with the zoning department and kept accessible to the public and said map, together with everything shown thereon and all amendments thereto, shall be as much a part of this ordinance as though fully set forth and described herein.

B. Groundwater Protection Overlay District boundaries are described as follows:

1. Northwest WHP Area. This area is delineated on the map which lies on the most northwest part of the WHP area at Rivercrest Drive to the south and east.

2. North WHP Area. This area is delineated on the map which lies on the most north part of the WHP area at Sundet Drive to the south.

3. Northeast WHP Area. This area is delineated on the map which lies on the most northeast part of the WHP area at Hastings Way and Village of Hallie to the south and west.

4. East WHP Area. This area is delineated on the map which lies on the east part of the WHP area at Hastings Way and Eddy Lane to the west.

5. Southeast WHP Area. This area is delineated on the map which lies on the most southeast part of the WHP area at Hastings Way and Jackson Street to the north and west.

6. South WHP Area. This area is delineated on the map which lies on the most south part of the WHP area at Redwood Drive to the north.

7. Southwest WHP Area. This area is delineated on the map which lies on the most southwest part of the WHP area at the Chippewa River and Riverview Drive to the north and east.

8. West WHP Area. This area is delineated on the map which lies on the most west part of the WHP area at the Chippewa River to the west of the Water Plant to the east. (Ord. 7204, 2016)

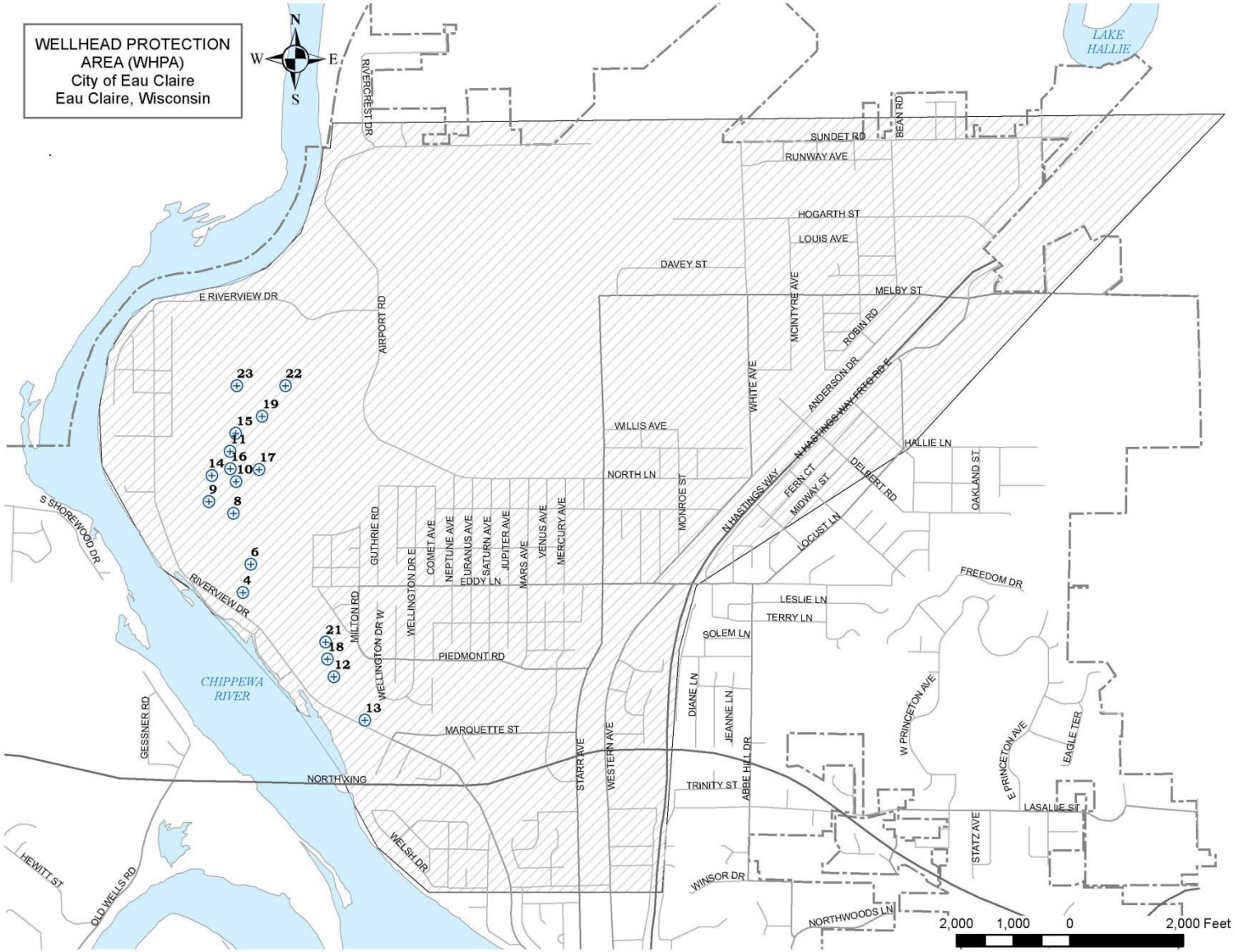
WELLHEAD PROTECTION
AREA (WHPA)
City of Eau Claire
Eau Claire, Wisconsin
N
S
E
W
LAKE HALLIE
CHIPPEWA RIVER
RIVERCREST DR
SUNDET RD
BEAN RD
RUNWAY AVE
HOGARTH ST
LOUIS AVE
DAVEY ST
MELBY ST
E RIVERVIEW DR
AIRPORT RD
MCINTYRE AVE
ROBIN RD
ANDERSON DR
N HASTINGS WAY
FRITZ RD E
WHITE AVE
WILLIS AVE
HALLIE LN
NORTH LN
MONROE ST
FERN CT
MIDWAY ST
DELBERT RD
OAKLAND ST
LOCUST LN
S SHOREWOOD DR
GUTHRIE RD
COMET AVE
NEPTUNE AVE
URANUS AVE
SATURN AVE
JUPITER AVE
MARS AVE
VENUS AVE
MERCURY AVE
EDDY LN
FREEDOM DR
RIVERVIEW DR
MILTON RD
WELLINGTON DR W
WELLINGTON DR E
LESLIE LN
TERRY LN
SOLEM LN
PIEDMONT RD
DIANE LN
JEANNE LN
W PRINCETON AVE
E PRINCETON AVE
EAGLE TER
GESSNER RD
MARQUETTE ST
STARR AVE
WESTERN AVE
NORTH XING
TRINITY ST
ABBE HILL DR
LASALLE ST
STATZ AVE
WELSH DR
HEWITT ST
OLD WELLS RD
WINSOR DR
NORTHWOODS LN
2,000 1,000 0 2,000 Feet
23
22
19
15
11
16
17
14
10
9
8
6
4
21
18
12
13

14.10.060 Permitted Uses. A. The following uses, if also allowed in the underlying zoning district according to the Zoning Code, Title 18 are permitted in the Groundwater Protection Overlay District, subject to the separation distance and other applicable requirements:

1. Public and private parks, green space, wood lots, trails, playgrounds, and beaches, provided there are no on-site wastewater disposal systems or holding tanks.
2. Residential, connected and serviced by City sewer.
3. Single-family residences on a minimum lot of 20,000 square feet with a private on-site sewage treatment system receiving less than 8,000 gallons per day, which meets the County and State health standards for the effluent, and is in conformance with SPS 383, Wis. Adm. Code.
4. Commercial establishments connected and serviced by City sewer.
5. Industrial establishments connected and serviced by City sewer. (Ord. 7204, 2016)

14.10.070 Separation Distance Requirements. The separation distances as specified in NR 811.12(5)(d), Wis. Adm. Code are adopted by reference and shall be maintained. A copy of the applicable Code standards is on file in the office of Community Development. (Ord. 7204, 2016)

14.10.080 Prohibited Uses. A. The following uses are prohibited in the Groundwater Protection Overlay District (for Existing Facilities, see s. 14.10.100):

1. Buried hydrocarbon, petroleum or hazardous chemical storage tanks. (Hazardous chemicals are identified by OSHA criteria under 40CFR Part 370.)
2. Cemeteries.
3. Chemical manufacturers (Standard Industrial Classification Major Group 28).
4. Coal storage.
5. Dry cleaners.
6. High capacity wells and industrial lagoons and pits.
7. Jewelry plating and metal plating.
8. Landfills and any other solid waste facility, except post-consumer recycling.
9. LP, petroleum, or other similar tank farms or individual above ground accessory tanks over 1,000 gallons.
10. Manure and animal waste storage except animal waste storage facilities regulated by the County.
11. Metallic and Nonmetallic earthen materials extraction, transfer or storage.
12. Pesticide and fertilizer dealer, transfer or storage.
13. Railroad yards and maintenance stations.
14. Rendering plants and slaughterhouses.
15. Salt or deicing material storage.
16. Salvage or junk yards.
17. Septage or sludge spreading, storage or treatment.
18. Septage, wastewater, or sewage lagoons.
19. Private on-site wastewater treatment systems or holding tanks receiving 8,000 gallons per day or more.
20. Stockyards and feedlots.
21. Stormwater infiltration basins that receive any “contaminant of concern” under Wisconsin Administrative Code Chapter NR 720 without adequate and acceptable pretreatment approved by the City and permitted as necessary by WDNR.
22. Wood preserving operations. (Ord. 7222, § 1 2017; Ord. 7204, 2016)

14.10.090 Conditional uses. A. Any person may request a conditional use permit for certain uses, activities and structures within the Groundwater Protection Overlay District not prohibited in section 14.10.120, if also allowed in the underlying zoning district according to Title 18.

B. The uses, activities, and structures that may be conditionally allowed within Groundwater Protection Overlay District are:

1. Machine or metal working shops.
2. Research labs, universities and hospitals.
3. Motor vehicular services, including filling and service stations, repair, renovation and body working.

C. All requests for a conditional use permit shall comply with section 18.35 and further shall include:

1. A site plan map with all building and structure footprints, driveways, sidewalks, parking lots, stormwater management structures, groundwater monitoring wells, and 2-foot ground elevation contours.
2. A business plan and/or other documentation which describes in detail the use,

activities, and structures proposed.

3. An environmental assessment report prepared by a licensed environmental engineer which details the risk to, and potential impact of, the proposed use, activities, and structures on groundwater quality.

4. An operational safety plan, which details the operational procedures for material processes and containment, best management practices, stormwater runoff management, and groundwater monitoring.

5. A contingency plan which addresses in detail the actions that will be taken should a contamination event caused by the proposed use, activities, or structures occur.

D. The person making the request shall, in addition to the fees as stated in the Fees and License Schedule, reimburse the City for consultant fees associated with this review at the invoiced amount, plus administrative costs.

E. All conditional use permits granted shall be subject to conditions that will include environmental and safety monitoring determined necessary to afford adequate protection of the public water supply. These conditions shall include, but not be limited to:

1. Provide current copies of all federal, state and local facility operation approval or certificates and on-going environmental monitoring results to the City.

2. Establish environmental or safety structures/monitoring to include an operational safety plan, material processes and containment, operations monitoring, best management practices, stormwater runoff management, and groundwater monitoring.

3. Replace equipment or expand in a manner that improves the environmental and safety technologies being utilized.

4. Prepare, file and maintain a current contingency plan which details the response to any emergency which occurs at the facility, including notifying municipal, county and state officials. Provide a current copy to the City.

5. The Plan Commission shall, in addition to the provisions of section 18.35, decide upon a request for a conditional use permit only after full consideration of the recommendations made by the director of Community Services or his or her designee, regarding groundwater impact and wellhead protection measures and may include any or all of the recommendations as conditions to grading the use permit. (Ord. 7222, § 2 2017; Ord. 7204, 2016)

14.10.100. Requirements for Existing Facilities. A. Existing facilities within the Groundwater Protection Overlay District at the time of enactment of such district which may cause or threaten to cause environmental pollution include, but are not limited to, the Wisconsin Department of National Resources draft or current list of "Inventory of Sites or Facilities Which May Cause or Threaten to Cause Environmental Pollution", Wisconsin Department of Industry, Labor and Human Relations' list of underground storage tanks, list of facilities with hazardous, solid waste permits, and all other facilities which are considered a prohibited use in prohibited uses, section 14.10.080, or a conditional use in conditional uses, section 14.10.090, all of which are incorporated herein as if fully set forth.

1. Such facilities as above which exist within the district at the time of enactment of a district shall provide copies of all current, revised or new federal, state and local facility operation approvals, permits or certificates; operational safety plans; and on-going environmental monitoring results to the City.

2. Such facilities as above which exist within the district at the time of enactment of a district shall have the responsibility of devising, filing and maintaining, with the City, a current contingency plan which details how they intend to respond to any emergency which may cause or threaten to cause environmental pollution that occurs at their facility, including notifying municipal, county and state officials.

3. Such facilities as above cannot engage in or employ a use, activity, or structure listed in prohibited uses, section 14.10.080, or in conditional uses, section 14.10.090, which they did not engage in or employ at the time of enactment of a district, and can only expand, replace or rebuild those present uses, activities, equipment, or structures on the site or property of record associated with the facility at the time of enactment of a district, and in a manner that improves the environmental and safety technologies already being utilized. No existing use, activity, or structure listed as a prohibited use or conditional use shall be expanded, replaced, or rebuilt unless a conditional use permit is granted for such expansion, replacement, or rebuilding. This section does not apply to normal maintenance or minor repairs. (Ord. 7204, 2016)

14.10.110 Enforcement and Penalty. A. Penalty. Any person who violates, neglects or refuses to comply with any of the provisions of this ordinance shall, upon conviction, be punished by forfeiture of not less than $500, nor more than $1,000, plus the cost of prosecution. Each day of violation is a separate offense..

B. Injunction. The City may, in addition to any other remedy, seek injunction or restraining order

against the party alleged to have violated the provisions herein, the cost of which shall be charged to the defendant in such action.

C. Cleanup Costs. As a substitute for, and in addition to any other action, the City may commence legal action against both the person who releases the contaminants and the owner of the facility whereupon the contaminants were released to recover the costs, together with the costs of prosecution. Any person who causes the release of any contaminants which may endanger or contaminate the municipal water supply system associated with a Ground Water Protection Overlay District shall immediately cease such discharge and immediately initiate clean up satisfactory to the City and the other state and federal regulatory agencies. The person who releases such contaminants and the person who owns the facility whereon the contaminants have been released shall be jointly and severally responsible for the cost of cleanup, consultant, or other contractor fees, including all administrative costs for oversight, review and documentation, including the City employees, equipment, and mileage. (Ord. 7204, 2016)

Chapter 14.12

METERS

Sections:

14.12.010 Meters--Installation.
14.12.015 Meters--Service piping.
14.12.020 Meters--Repairs to.
14.12.030 Removal.
14.12.035 Inspection of premises.
14.12.040 Meters--Failure to read.
14.12.050 Failure to register.
14.12.060 Leakage--Abnormal consumption registered.
14.12.070 Meters--Complaint tests.
14.12.080 Remote reading registers.
14.12.090 Surreptitious use of water.

14.12.010 Meters--Installation. Meters of proper size and type will be furnished by, remain the property of, and be placed by the utility and are not to be disconnected or tampered with by the consumer. All meters shall be so located that they are easily accessible, with a minimum of 5 feet of head room provided for reading, inspecting and servicing, and safe from freezing or breaking. They will not be installed in pits, coal cellars, or other undesirable locations.

All meters smaller than 3 inches shall be located with at least an area of 12 inches around, above and below the meter being free and unobstructed.

All meters 3 inches and larger shall be located:

(1) with an area of 18 inches around all sides and below the meter being free from obstructions;

(2) with an area of 36 inches above the meter being free from obstructions;

(3) with an unobstructed, functioning floor drain within 6 feet of a point directly below the meter; and

(4) near some access to the outside of the building in which they are located, such as an outside door or window, for the periodic repair and testing of the meter.

All piping within the building must be supplied by the customer. Inlet and outlet valves to and from each meter shall be maintained by the property owner and in satisfactory normal operating condition. (Ord. 4423 §18, 1984; Ord. 3395 §IV, 1973; Ord. 3179 §I(part), 1970).

14.12.015 Meters--Service piping. A. In cases where a new customer whose service is to be metered installs the original service piping or where an existing metered customer changes his service piping for his own convenience, or where an existing flat rate customer requests to be metered, the customer shall, at his or her expense, provide a suitable location and the proper connections for the meter. The water superintendent should be consulted as to the type and size of meter setting.

B. Where it is possible to set meters in the basement, or other suitable place within a building, the service connection shall be provided with an approved shutoff valve on either side of the meter. Proper length, with a minimum horizontal run of 18 inches, shall be provided for the inserting of the meter into the supply line.

C. All water meters 1½ inches and larger shall be provided with a suitable valved and sealed bypass, having a diameter of not less than 1 nominal size smaller than the service entrance, which can be utilized in the event of removal, repair or changing of such meter.

D. No permit will be given to change from metered to flat rate service.

E. The water cannot be turned on for a consumer except by a duly authorized employee of the water utility. When a plumber has completed a job, the plumber must leave the water turned off. This does not prevent the plumber from testing the work. (Ord. 4423 §19, 1984).

14.12.020 Meters--Repairs to. Meters will be repaired by the water utility and the cost of such repairs caused by ordinary wear and tear will be borne by the utility. Repair of any damage to a meter resulting from the carelessness of the owner of the premises, his agent or tenant, or from the negligence of any one of them to properly secure and protect same, including any damage that may result from allowing a water meter to become frozen or to be injured from the presence of hot water or steam in the meter, shall be paid for by the customer. (Ord. 4423 §20, 1984; Ord. 3179 §I(part), 1970).

14.12.030 Removal. No meter shall be removed or otherwise disturbed except by department employees or by parties authorized by the superintendent to do so. (Ord. 3179 §I(part), 1970).

14.12.035 Inspection of premises. During reasonable hours any officer or authorized employee of the utility shall have the right of access to the premises supplied with service, for the purpose of inspection or for the enforcement of the utility's rules and regulations. At least once every 12 months the utility will make a systematic inspection of all unmetered water taps for the purpose of checking waste and unnecessary use of water. (Ord. 4423 §21, 1984).

14.12.040 Meters--Failure to read. A. Authorized utility employees shall have access to premises at all reasonable hours, 8:00 a.m. to 5:00 p.m., Monday through Friday, to read meters at least quarterly each year, which readings shall constitute the basis of charges for water used.

B. In case access cannot readily be made to premises, a card upon which the owner or agent shall mark the numerical meter reading shall be left at the premise or mailed to the owner or agent. This card shall be forwarded to the water utility office, and for the period involved, the usage shall be based on the marked card.

C. Where the utility is unable to read a meter, and the card was not marked and returned, charges will be estimated and a billing, indicating it is an estimated bill, will be mailed to the customer. Any differences shall be adjusted when the meter is again read. Only in unusual cases shall more than three consecutive estimated or minimum bills be rendered. (Ord. 7425 §2, 2021; Ord. 5903 §2, 1998; Ord. 4423 §22, 1984; Ord. 3179 §I(part), 1970).

14.12.050 Failure to register. If the meter is damaged or fails to operate, the bill will be based on use during the same period of the previous year, unless there is some reason why the use was not normal. If the use cannot be properly employed, the bill will be based on three months use either before or after the failure of meter to register, whichever is deemed more equitable. (Ord. 5903 §2, 1998; Ord. 4423 §22, 1984; Ord. 3179 §I(part), 1970).

14.12.060 Leakage--Abnormal consumption registered Pursuant to Wis. Admin. Code 185.35(6) and the utility's policy, when a leak unknown to the customer is found in an appliance or the plumbing and is promptly repaired upon identification or notification, the utility shall estimate the water wasted due to the leak and bill for this excess usage at the lowest volume rate published. If, however, the consumer fails to have the leak repaired promptly, the total consumption will be billed at regular rates. No additional adjustments shall be made for water supplied after the customer has been notified of the leak and has had an opportunity to correct the condition. (Ord. 7425 §3, 2021; Ord. 3179 §I(part), 1970; Prior code §7.08(f)).

14.12.070 Meters--Complaint tests. If a customer requests, the utility shall promptly make an accuracy test in addition to the periodic or installation test if 24 months or more have elapsed since the last complaint test of the same meter in the same location.

All meter and remote register testing shall be done in accordance with the standards as set forth in the Wisconsin Administrative Code, P.S.C. Sections 185.61 through 185.79.

If the meter and/or remote register has been tested within the last 24 months, an amount equal to one-half of the estimated cost of the meter test shall be advanced to the utility by the customer.

If the meter is found fast in excess of 2%, no charge will be made for the test and there will be an adjustment made for the over-charge on the past billing. (Ord. 5903 §2, 1998; Ord. 4438, 1984; Ord. 4423 §23, 1984; Ord. 3179 §I(part), 1970).

14.12.080 Remote reading registers. The water utility may install remote register water meter attachments as provided in this section, which shall be located outside of the premises and shall provide a

reading of water consumption on the premises. The cost of such register installation shall be borne by the utility.

A. A remote register shall be installed in any existing premise at the discretion of the utility.

B. Any premise for which a building permit is issued after the effective date of the ordinance codified in this section (December 14, 1998), shall have installed a remote register water meter attachment. The property owner, at his or her expense, shall install a thin-wall or equivalent conduit (one-half inch in diameter) extended from a position flush with the exterior wall of the premise to a point below the basement ceiling line. The location and manner of such installation shall permit the installation of such a remote register which will be in compliance with subsection C.

C. The remote register water meter attachment shall be located as determined by the utility in an easily accessible place, along a walkway or driveway that is kept cleared throughout the year and as near the water meter as possible. The remote register shall be located forty to sixty inches above ground level. The water utility superintendent or the designee of the superintendent may approve other locations for such remote register for good cause shown. (Ord. 5903 §2, 1998; Ord. 3959, 1979).

14.12.090 Surreptitious use of water. When the utility has reasonable evidence that a consumer is obtaining his supply of water, in whole or in part, by means of devices or methods used to stop or interfere with the proper metering of the utility service being delivered to his equipment, the utility reserves the right to estimate and present immediately a bill for service unmetered as a result of such interference and such bill shall be payable subject to a 24-hour disconnection of service. When the utility shall have disconnected the customer for any such reason, the utility will reconnect the customer upon the following conditions:

1. the customer has no outstanding bills for water service owing to the utility,
2. the customer has paid the utility for any and all damages to its equipment on the customer's premises due to such stoppage or interference with its metering, and
3. the customer must agree to comply with reasonable requirements to protect the utility against further losses.

Sections 98.26 and 943.20, Wisconsin Statutes, as relating to water service, are hereby adopted and made part of these rules. (Ord. 4423 §24, 1984).

Chapter 14.16

SPECIAL SERVICES

Sections:

14.16.010 Thawing frozen services.
14.16.030 Frozen service--Prevention measures.
14.16.040 Hydrants--Opening for use.
14.16.050 Maintenance and replacement of service laterals.

14.16.010 Thawing frozen services. A. Frozen service laterals located between the water main and curb box shall be thawed by and at the entire expense of the water utility except where the customer has been notified in advance of a corrective measure to follow or the freezing was caused by contributory fault or negligence on the part of the customer, such as reduction of the cover or undue exposure of the piping in the building or on the customer's property, or failure to comply with water department specifications and requirements as to depth of service, sufficient backfill, or for other similar reason (see Section 14.16.030 for adjustment of bill where the water utility requests the customer to permit a stream of water to flow to prevent freezing). Notice published in the official city newspaper and given to other local news media of corrective measures to follow to prevent freezing shall be deemed to constitute adequate advance notice to customers within the meaning of this section.

B. The thawing of frozen services or other underground pipes electrically may introduce hazards if proper precautions are not taken. Damage to buildings and to electrical facilities may result from high current flow in grounding conductors and neutrals. The electric current may reach the grounding conductor and the neutral which can be in parallel with the pipe, or reach the conductor because of physical contact between the interior water piping and the metallic tubing or conduit of the interior wiring.

C. It is recommended that when service pipes are being thawed electrically, the water meters may be removed and that experienced personnel familiar with the above hazard be asked to disconnect the conductors used for thawing the pipe. (Ord. 3877 §1, 1978).

14.16.030 Frozen service--Prevention measures. If, in the opinion of the superintendent of the water department, it becomes necessary to allow water to run continuously for a certain period to prevent

freezing of laterals, the owner or occupant may leave a valve open until corrective measures can be undertaken economically. For the period in which the water is so allowed to flow, he will be billed according to the average bill for this particular location over similar periods, or according to the average consumption for others of the same class, if he be a new customer, provided he notified the water department at the time the valve was opened for such precautionary purpose.

Corrections must be made as soon as conditions warrant, as he will not be given consideration more than once for the same condition. (Ord. 3179 §I(part), 1970; Prior code §7.09(part)).

14.16.040 Hydrants--Opening for use. A. Only persons authorized by the superintendent of the water department or the chief of the fire department are permitted to open fire hydrants for any purpose.

B. In case of temporary use of a hydrant, the hydrant valve will be set at proper opening by employees of the water department, and the flow of water shall be regulated by means of a valve set with a swing joint to facilitate quick disconnection from the hydrant. (Ord. 3179 §I(part), 1970; Prior code §7.10)

14.16.050 Maintenance and replacement of service laterals. A. The cost of maintaining and replacing that portion of the service lateral, and appurtenances, which is located between the water main up to and including the curb box shall be borne by the water utility, subject to the provisions of this section. Such maintenance or replacement shall be required only in the event of a leak, or in the event there is damage to, or deterioration or malfunction of such portion of the lateral so that the water service to the premises served is adversely affected thereby, as reasonably determined by the water superintendent, and which is not the result of the negligence or other fault of the owner, of the premises, or from the decision on the part of the owner, without more, to change from one size of service to another size of service. The water utility shall only be obligated for the cost of replacement of a service lateral of similar size as that portion of the service lateral which is replaced. The replacement lateral shall be of a type of material that conforms to current standards. The ordinance codified in this section shall take effect as of January 1, 1978.

B. The following percentage of the actual cost of such replacement shall be borne by the city according to the following schedule over the five years next following such effective date for replacement occurring during such year. The property owner shall be responsible for the remaining percentage of such replacement costs.

Year	City-paid percent of costs
1978	20%
1979	40%
1980	60%
1981	80%
1982	100%

C. Commencing in the year 1982 and thereafter, the entire cost of such replacement shall be borne by the water utility. The water utility shall be responsible for that percentage of costs for the year in which the damage or defect occurs or is discovered, except in those cases where repair or maintenance cannot be made due to weather or other similar reason beyond the control of the property owner, in which case the percentage of the next subsequent year shall be used.

D. 1. Any claim filed under this section may be authorized to be paid from the city treasury after the comptroller has audited and approved the claim as a proper charge against the treasury, and has indorsed approval thereon after having determined that the following conditions have been complied with:

a. That funds are available therefor pursuant to the budget approved by the city council;

b. That the item or service covered by such claim has been duly authorized by the proper official, department head, board, or commission;

c. That the item or service has been actually supplied or rendered in conformity with such authorization;

d. That the claim is just and valid pursuant to law. The comptroller may require the submission of such proof and evidence to support the foregoing as deemed necessary.

2. The comptroller shall file with the city council not less than monthly a list of the claims approved, showing the date paid, name of claimant, purpose and amount.

3. The city shall authorize an annual detailed audit of such financial transactions and accounts as required by Wisconsin Statutes, Section 66.0609. (Ord. 7425 §4, 2021; Ord. 4008, 1979; Ord. 3877 §3, 1978).

Chapter 14.20

RATES AND BILLING

Sections:

14.20.010 Bills to customers.
14.20.015 Service contract.
14.20.020 Billing--Late payment charge.
14.20.025 Combined metering.
14.20.030 Unpaid charges--Lien on property.
14.20.040 Billing dates--Penalty dates.
14.20.050 Rates--Public fire protection service.
14.20.055 Other charges.
14.20.060 Water Rates--Metered.
14.20.070 Reconnection charge.
14.20.090 Unmetered service.
14.20.095 Seasonal service.
14.20.100 Rates--Private fire protection service.
14.20.130 Service to other municipalities.
14.20.135 Public service.
14.20.140 Bulk water.
14.20.150 Water lateral installation charge.

14.20.010 Bills to customers. A. All water bills and notices of any nature relative to water supply shall be addressed to the customer. "Customer" shall be construed to mean the owner of the property or their designee. In the case of rental property, the owner may direct the utility to recognize a tenant as a customer subject to the following conditions:

1. Each rental unit shall be individually metered.
2. Any tenant-customer signing for service agrees to be responsible for the prompt payment for services and for notifying the owner and utility of any change in occupancy.

Service may not be denied to any customer provided the above conditions are met and the customer is legally occupying the property.

B. Reasonable care will be exercised for delivery of water bills. The failure to receive such bills shall not relieve the owner or customer of any premises from payment of bills within the prescribed period, nor exempt him from the responsibility imposed for delinquency of accounts. (Ord. 7425 §5, 2014; Ord. 7085 §4, 2014; Ord. 4423 §25, 1984; Ord. 3918 §1, 1978; Ord. 3179 §I(part), 1970).

14.20.015 Service contract. A. The request by a property owner to have a water meter set and the water supply turned on by the utility is interpreted as a service contract for continuous water service with the water utility.

B. For change in ownership of property requiring special billing by the utility, a special billing charge shall apply. A special meter reading charge shall apply to the customer when the water utility reads the meter to disconnect service and/or provide special billing. These charges may not be assessed to the new customer. For applicable rates see the City of Eau Claire Schedule of Fees and Licenses.

C. Where the property owner requests the utility to bill a tenant-customer, and the tenant-customer accepts this responsibility, a special billing charge shall apply. A special meter reading charge shall apply to the customer when the water utility reads the meter to disconnect service and/or provide special billing. These charges may not be assessed to the new customer. For applicable rates see the City of Eau Claire Schedule of Fees and Licenses. Service will not be denied to any tenant-customer provided he or she is legally occupying the property and has accepted responsibility for water service. (Ord. 7425 §6, 2021; Ord. 7085 §4, 2014; Ord. 4423 §26, 1984).

14.20.020 Billing--Late payment charge. Bills for water service are rendered quarterly or monthly and become due and payable within 20 days of issuance. Regardless of any provision to the contrary in this chapter, wherever quarterly billing for water service is provided, the water utility may, at its option, render bills for water service on a monthly basis. For customers billed monthly and whose meters are read quarterly, the utility may compute estimated monthly bills for the first two months of a regular quarterly meter reading period and compute the bill for the third month at the regular quarterly rates for service deducting the estimated bills for the first two months. A late payment charge of 3 percent will be added to bills not paid within 20 days of issuance. This one-time 3 percent late payment charge will be applied only to any unpaid balance for the current billing period's usage. This late payment charge is applicable to all customers. The utility customers may be given a written notice that the bill is overdue no sooner than 20 days after the bill is issued; and unless payment or satisfactory arrangement for payment is made within the next 10 days, service may be

disconnected pursuant to Chapter PSC 185, Wisconsin Administrative Code. (Ord. 7085 §4, 2014; Ord. 6212 §5, 2001; Ord. 5679 §1, 1997; Ord. 5149 §1, 1991; Ord. 4423 §27, 1984; Ord. 4230 §1, 1981).

14.20.025 Combined metering. A. Volumetric meter readings will be combined for billing if the utility, for its own convenience, places more than one meter on a single water service lateral. Multiple meters placed for the purpose of identifying water not discharged into the sanitary sewer are not considered for utility convenience and shall not be combined for billing. Meter readings from individually metered separate service laterals shall not be combined for billing purposes. This does not preclude buildings used in the same business and located on the same parcel from having the water supply piping installed to a central point by the customer so that the buildings can be served by a single water service lateral and metered in one place. (Ord. 5274 §1, 1992).

14.20.030 Unpaid charges--Lien on property. A. Except as provided in subsection B., all water bills and service charges shall be a lien on the parcel of land to which water service is supplied. All sums that have accrued and are not paid by the fifteenth of November in any year shall be certified to the city clerk, and shall be placed on the tax roll for collection as provided in Section 66.0809, Wisconsin Statutes.

B. If an arrearage is for utility service furnished and metered directly to a mobile home unit in a licensed mobile home park, notice of arrearage shall be given to the owner of the mobile home unit. Delinquent amounts shall become a lien on the mobile home unit rather than a lien on the parcel of real estate on which the mobile home unit is located. A lien on a mobile home unit may be enforced using the procedures under section 779.48(2), Wisconsin Statutes. (Ord. 7425 §7, 2021;Ord. 6212 §6, 2001; Ord. 5679 §2, 1997; Ord. 3179 §I(part), 1970).

14.20.040 Billing dates--Penalty dates. For billing purposes, the city is divided into four groups. As of the last day of each month a bill will be prepared for one of the following groups:

Group 1 January, April, July, October;
Group 2 February, May, August, November;
Group 3 December, March, June, September;
Group 4 Every month. (Ord. 7085 §4, 2014; Ord. 5460 §1, 1994; Ord. 3793 §5, 1977).

14.20.050 Rates--Public fire protection service. Public Fire Protection Service. Under Wisconsin Statute s. 196.03(3)(b), the city of Eau Claire has chosen to have the utility bill the retail general service customers for public fire-protection service. This service shall include the use of hydrants for fire protection service only and such quantities of water as may be demanded for the purposes of extinguishing fires within the service area. This service shall also include water used for testing equipment and training personnel. For all other purposes, the metered or other rates set forth, or as may be filed with the Public Service Commission, shall apply. This fire protection service rate shall apply to all water customers ~~is~~ in addition to the rates contained elsewhere in Title 14 ~~or~~ and shall be in an amount as stated in the City of Eau Claire Schedule of Fees and Licenses. (Ord. 7425 §8, 2021; Ord. 7085 §4, 2014; Ord. 7044 §1, 2013;Ord. 6983 §1, 2011; Ord. 6876 §1, 2009; Ord. 6421 §1, 2003; Ord. 6131 §1, 2001; Ord. 5903 §3, 1998; Ord. 5679 §3, 1997; Ord. 5522, 1995; Ord. 5460 §2, 1994; Ord. 5274 §2, 1992; Ord. 5149 §2, 1991; Ord. 4943, 1989; Ord. 4656 §1, 1986; Ord. 4423 §28, 1984; Ord. 4230 §2, 1981; Ord. 3793 §5, 1977; Ord. 3395 §V(part), 1973; Ord. 3179 §I(part), 1970; Prior code §7.15(a)(part)).

14.20.055 Other charges. The following charges shall be applied to a customer's account as applicable in an amount as stated in the City of Eau Claire Schedule of Fees and Licenses

A. A special meter reading charge shall apply to the customer when the water utility reads the meter to disconnect service and/or provide special billing. This charge may not be assessed to a new customer.

B. A special billing charge shall apply to the customer to cover the administrative expenses associated with disconnecting service and/or providing special billing. This charge may not be assessed to a new customer.

The above-stated charges shall apply under the following circumstances:

1. Ownership of property transfers;
2. Owner of property assigns responsibility for service to a tenant-customer (and the tenant-customer accepts the responsibility);
3. Tenant-customer moves and billing address transfers back to owner;
4. Tenant changes and new tenant accepts responsibility for bill; or
5. Property management company or condominium association transfers and responsibility is accepted by new management.

C. A missed appointment charge will be billed by the utility if the customer schedules an appointment for a special meter reading with a utility serviceman and the customer fails to be present at such time to allow

access to the meter. (Ord. 7425 §9, 2021; Ord. 7085 §4, 2014; Ord. 6711 §1, 2006; Ord. 6131 §2, 2001; Ord. 5679 §5, 1997; Ord. 4423 §29, 1984).

14.20.060 Water Rates--Metered. A. General water service, volume and meter rental rate charges shall be as stated in the City of Eau Claire Schedule of Fees and License.

B. Upon request and payment of such fee as stated in the City of Eau Claire Schedule of Fees and Licenses, the utility shall furnish and install additional meters to water service customers for the purpose of measuring the volume of water used that is not discharge into the sanitary sewer system and to sewerage service customers who are not customers of the water utility for the purpose of determining the volume of sewage that is discharge into the sanitary sewer system. An additional meter rental charge applies if the additional meter is installed on the same service lateral as the primary meter. The metering configuration and meter size determine the additional meter charge.

C. Unit of Service. A unit of service shall consist of any residential or small commercial aggregation of space or area occupied for a distinct purpose, such as a residence, apartment, flat, store or office which is equipped with one or more fixtures for rendering water service, separate and distinct from other users.

Suites in houses or apartments where complete housekeeping functions (such as cooking) are not exercised shall be classed as rooming houses. Thus, houses and apartments having suites of one, two or more rooms with toilet facilities, but without kitchen for cooking, are classed as rooming houses.

When a consumer's premises have several buildings each supplied with service and metered separately, the full service charge will be billed for each meter separately, and the readings will not be cumulated. If these buildings are all used in the same business and are connected by the consumer, they can be metered in one place. If the utility, for its own convenience, installs more than one meter, the readings will be cumulated for billing. (Ord. 7425 §10, 2021; Ord. 7085 §4, 2014; Ord. 7044 §2, 2013; Ord. 6983 §6, 2011; Ord. 6876 §2, 2009; Ord. 6711 §2, 2006; Ord. 6421 §2, 2003; Ord. 6131 §3, 2001; Ord. 5903 §3, 1998; Ord. 5679 §6, 1997; Ord. 5460 §4, 1994; Ord. 5274 §4, 1992; Ord. 5149 §4, 1991; Ord. 4943, 1989; Ord. 4656 §3, 1986; Ord. 4423 §30, §31, 1984; Ord. 4230 §3, 1981; Ord. 3793 §5, 1977; Ord. 3395 §V(part), 1973: Ord. 3179 §I(part), 1970; Prior code §7.15(a)(part)).

14.20.070 Reconnection charge. A. Where a customer, at customer request, has been disconnected (shut off at curb stop or meter removed) and where customer requests reconnection of service at the same location, a reconnection charge shall be billed.

B. A reconnection charge shall be made to customers whose services are disconnected (shut off at curb stop or meter removed) because of non-payment of bills when due, (not including disconnection for failure to comply with deposit or guarantee rules).

C. If reconnection is requested for the same location by any member of the same household, or, if a place of business, by any partner of the same business, it shall be considered the same customer.

D. Reconnection charges shall be as stated in the City of Eau Claire Schedule of Fees and License.

E. There is no charge for disconnection. (Ord. 7425 §11, 2021; Ord. 7085 §4, 2014; Ord. 6711 §3, 2006; Ord. 5903 §3, 1998; Ord. 5679 §7, 1997; Ord. 5274 §5, 1992; Ord. 5149 §5, 1991; Ord. 4656, 1986; Ord. 4423, 1984; Ord. 4230 §4, 1981).

14.20.090 Unmetered service A. Service may be supplied temporarily on an unmetered basis where the utility cannot immediately install a water meter, including water used for construction. Unmetered service shall be billed the average amount that would be charged to a metered residential customer including the service charge for a 5/8-inch meter. If the utility determines the actual usage exceeds the residential average of water per quarter, an additional charge for the estimated excess usage shall be made according to the rates as stated in the City of Eau Claire Schedule of Fees and Licenses.

B. This schedule applies only to customers with a 1-inch or smaller service connection. For customers with a larger service connection, the utility shall install a temporary meter and charges shall be based on the rates as stated in the City of Eau Claire Schedule of Fees and Licenses.(Ord. 7425 §12, 2021; Ord. 7085 §4, 2014; Ord. 6876 §3, 2009; Ord. 6711 §4, 2006; Ord. 6131 §4, 2001; Ord. 5903 §3, 1998; Ord. 5679 §10, 1997; Ord. 5460 §5, 1994; Ord. 5274 §7, 1992; Ord. 5149 §7, 1991; Ord. 4943, 1989; Ord. 4656 §5, 1986; Ord. 4423 §§34 & 35, 1984; Ord. 4230 §§5, 6, 1981; Ord. 3793 §7, 1977; Ord. 3395 §V(part), 1973: Ord. 3179 §I(part), 1970; Prior code §7.15(d)).

14.20.095 Seasonal service. Seasonal customers are general service customers who voluntarily request disconnection of water service and who resume service at the same location within 12 months of the disconnection, unless service has been provided to another customer at that location in the intervening period. The utility shall bill seasonal customers the applicable service charges year-round, including the period of temporary disconnection.

B. Seasonal service shall include customers taking metered or unmetered service.

C. Upon reconnection, the utility shall apply a charge and require payment of any unpaid charges under this schedule.

D. Applicable charges shall be as stated in the City of Eau Claire Schedule of Fees and Licenses. (Ord. 7425 §13, 2021; Ord. 7085 §4, 2014; Ord. 6876 §4, 2009; Ord. 6711 §5, 2006; Ord. 6131 §5, 2001; Ord. 5679 §12, 1997; Ord. 5460 §6, 1994; Ord. 5274 §9, 1992; Ord. 5149 §9, 1991; Ord. 4943, 1989; Ord. 4656 §6, 1986; Ord. 4423 §36, 1984).

14.20.100 Rates--Private fire protection service. A. This service shall consist of unmetered connections to the main for the purpose of supplying water to private fire protection service such as automatic sprinkler systems, standpipes, and private hydrants. This service shall also include reasonable quantities of water used for testing check valves and other backflow prevention devices.

B. Private fire protection service demand charges shall be as stated in the City of Eau Claire Schedule of Fees and Licenses. (Ord. 7425 §14, 2021; Ord. 7085 §4, 2014; Ord. 6876 §5, 2009; Ord. 5903 §3, 1998; Ord. 5679 §13, 1997; Ord. 5274 §10, 1992; Ord. 4943, 1989; Ord. 3793 §8, 1977; Ord. 3395 §VI(part), 1973: Ord. 3179 §I(part), 1970; Prior code §7.16).

14.20.130 Service to other municipalities. A. Water service may be furnished to other municipalities upon written application and upon approval thereof by the city council.

B. Upon filing of such application the council shall first ascertain from the superintendent of the water department that such service will not adversely affect the water requirements of the city.

C. Granting the application shall be upon the condition that the service will be available from the nearest point to the particular location from which applicant may desire service and that the capacity to serve will be based on the size of the city's then existing watermain with pressure limited accordingly. Any installation for increased service or pressure will be at the expense of applicant.

D. Payment for water used shall be made by applicant based upon the reading of the master meter, bills to be rendered quarterly and all ordinances, rules and regulations applicable to retail service governing the municipal water utility of the city shall apply.

E. The utility shall furnish facilities up to the city limits, and any investment in mains not subject to special assessment by the city shall be contributed by the customer. If a master meter is employed, the cost of the meter will be borne by the customer. Such master meter shall be installed in an approved meter pit at a site within the city limits, designated by the city. (Ord. 4423 §38, 1984; Ord. 3793 §§10, 11, 1977; Ord. 3395 §VIII, 1973; Ord. 3174 §I(part), 1970; Prior code §7.20).

14.20.135 Public service. A. Water service supplied to municipal buildings, schools and similar properties shall be metered and the regular service rates applied.

B. Water used on an intermittent basis for flushing sewers, street sprinkling, flooding skating rinks, drinking fountains, and similar activities shall be metered where meters can be set to measure the service. Where it is impossible to measure the service, the superintendent shall estimate the volume of water used based on the pressure, size of opening, and period of time water is allowed to be drawn. The estimated quantity used shall be billed at the volumetric rates as stated in the City of Eau Claire Schedule of Fees and Licenses. (Ord. 7425 §15, 2021; Ord. 7085 §4, 2014; Ord. 6876 §6, 2009; Ord. 6711 §6, 2006; Ord. 6131 §6, 2001; Ord. 5903 §3, 1998; Ord. 5679 §15, 1997; Ord. 5460 §7, 1994; Ord. 5149 §10, 1991; Ord. 4943, 1989; Ord. 4656 §9, 1986; Ord. 4423 §39, 1984; Ord. 4230 §7, 1981; Ord. 3793 §12, 1977).

14.20.140 Bulk water. A. All bulk water supplied from the water system through hydrants or other connections shall be metered, or at the direction of the utility, estimated. Utility personnel or a utility-approved party shall supervise the delivery of water. Bulk water sales are:

1. Water supplied by tank truck or from a hydrant for the purpose of extinguishing fires outside the utility's immediate service area;

2. Water supplied by tank truck or from a hydrant for purposes other than extinguishing fires, such as irrigation or the filling of swimming pools; or

3. Water supplied from hydrants or other temporary connections for general service type applications.

B. A service charge and charge for the volume of water used will be billed to the party using the water. A deposit for the meter and/or valve shall be collected and will be refunded upon return of the utility's equipment. Damaged or lost equipment will be repaired or replaced at the customer's expense. Bulk water charges shall be as stated in the City of Eau Claire Schedule of Fees and Licenses. (Ord. 7425 §16, 2021; Ord. 6711 §7, 2006; Ord. 6131 §7, 2001; Ord. 5903 §3, 1998; Ord. 5679 §16, 1997; Ord. 5460 §8, 1994; Ord. 5274 §11, 1992; Ord. 5149 §11, 1991; Ord. 4943, 1989; Ord. 4656 §10, 1986; Ord. 4423 §40, 1984; Ord. 3793 §13, 1977; Ord. 3395 §IX, 1973; Ord. 3179 §I(part), 1970; Prior code §7.21).

14.20.150 Water lateral installation charge. Subdivision developers shall be responsible, where the main extension has been approved by the utility, for the water service lateral installation costs from the main through the curb stop and box. When the cost of a utility main extension is to be collected through assessment by the city, the actual average water lateral installation costs from the main through the curb stop and box shall be included in the assessment of the appropriate properties. The initial water lateral not installed as part of a subdivision development or an assessable utility extension shall be installed from the main through the curb stop and box by the utility, for which the actual cost shall be charged. (Ord. 5149 §12, 1991; Ord. 4656 §11, 1986; Ord. 4230 §8, 1981).

Title 15

SEWERS AND SEWERAGE

Chapters:

15.04 Sewerage Service Charge
15.08 Sewer Regulations
15.12 Industrial Pretreatment

Chapter 15.04

SEWERAGE SERVICE CHARGE

Sections:

15.04.010 General.
15.04.020 Definitions.
15.04.030 Wastewater service charge.
15.04.035 Wholesale charge.
15.04.040 Charge based upon water consumption.
15.04.050 Meter equipment installation.
15.04.060 Measurement of water consumption not yet determined--Charges.
15.04.070 Sewerage service charge to be based on estimate made by city.
15.04.090 Seasonal water usage--Charges.
15.04.100 Water bill estimate to be used in conjunction with actual readings.
15.04.110 Change of occupancy--Sewer service charge to be based upon consumption by new occupants at former premises.
15.04.120 Billing and collection.
15.04.130 Duties and powers of officials.

15.04.010 General. Pursuant to the provisions of Wisconsin Statutes, section 66.0821 and other provisions of law, the city establishes a sewerage service charge in an amount required to meet all or part of the requirements for the construction, reconstruction, improvement, extension, operation, maintenance, repair and depreciation of the sewerage system within the city, and for payment of all or part of the principal and interest of any indebtedness incurred thereof, including the replacement of the funds advanced by or paid from the general fund of the city. (Ord. 5418 §1, 1994; Ord. 3574 [part], 1975).

15.04.020 Definitions. Unless the context specifically indicates otherwise, the meaning of terms used in this title shall be as follows:

1. "Act" or "the act" means the Federal Water Pollution Control Act, also known as the Clean Water Act, as amended, 33 U.S.C. 1251 et seq.

2. "Billable flow" means the water meter readings provided by the municipality obtained by reading the private water meters and including flat rate estimates.

3. "Biochemical oxygen demand" (BOD) means the quantity of oxygen utilized in the biochemical oxidation of organic matter under standard laboratory procedure in five days at 20° C., expressed in milligrams per liter.

4. "Board of health" or "board" means the Eau Claire city-county health department or its authorized deputy, agent or representative.

5. "Bypass" means the intentional diversion of waste streams from any portion of an industrial user's treatment facility.

6. "City" means the city of Eau Claire, and its authorized and designated officers and employees.

7. "Chemical oxygen demand" means any analytical measurement performed in a controlled environment by which the organic matter content of a sample is determined through the use of a strong chemical oxidant. Quantitative measurements of COD are performed in accordance with 40 CFR Part 136.

8. "Commercial user" means any place of business which discharges sanitary waste, as distinct from industrial wastewater.

9. "Commercial wastewaters" means domestic wastewater emanating from a place of business, as distinguished from industrial wastewater.

10. "DNR" means the state of Wisconsin Department of Natural Resources.

11. "Debt service charge" means a charge levied on users of a sewage treatment plant for the cost of repaying money borrowed to construct said plant.

12. "Domestic wastewater" means water-carried wastes in the amount of approximately one hundred gallons per capita per day containing approximately 250 mg/l BOD_5 and approximately 250 mg/l suspended solids, consistent with that emanating from a typical household.

13. "EPA" means the United States Environmental Protection Agency.

14. "Flow-equalization" means any process utilized to equalize discharge over a period of time sufficiently long to eliminate adverse effects on the wastewater collection and treatment system.

15. "Flow proportional composite sample" is a composite sample consisting of a series of discrete sample aliquots of a wastestream, taken at the same sampling point at intervals in time over the course of a 24-hour period, with the volume of each discrete aliquot proportional to the volume of the wastestream passing the sampling point at each sampling interval.

16. "Garbage" means solid wastes from the domestic and commercial preparation, cooling, and dispensing of food, and from the handling, storage, and sale of produce.

17. "Industrial user" means any user discharging a waterborne trade or process waste.

18. "Industrial wastewater" means the liquid processing wastes from an industrial manufacturing process, trade, or business including, but not limited to all Standard Industrial Classification Manual (published by office of Management and Budget (1972) Class D manufacturers, as distinguished from domestic wastewater. Wastewaters having similar properties are classified as "industrial" even if entering a collector sewer from a commercial establishment.

19. "Interference" means any discharge which alone or in conjunction with a discharge or discharges from other sources, both:

a. Inhibits or disrupts the POTW and any of its processes or operations, or its sludge use or disposal; and

b. Therefore is a cause of a violation of any requirement of the POTW's WPDES permit (including an increase in the magnitude or duration of a violation) or of the impairment or prevention of sewage sludge use or disposal under Chs. 144 and 147, Wis. Stats.

20. "Natural outlet" means any outlet into a watercourse, pond, ditch, lake or other body or surface of groundwater.

21. "New source" means any building, structure, facility or installation from which there is or may be a discharge of pollutants, the construction of which commenced after the publication of proposed Pretreatment Standards under sec. 307(c) of the act which will be applicable to such source if such Standards are thereafter promulgated in accordance with that section, provided that:

a. The building, structure, facility or installation is constructed at a site at which no other source is located; or

b. The building, structure, facility or installation totally replaces the process or production equipment that causes the discharge of pollutants at an existing source; or

c. The production of wastewater generating processes of the building, structure, facility or installation are substantially independent of an existing source at the same site. In determining whether these are substantially independent, factors such as the extent to which the new facility is engaged in the same general type of activity as the existing source should be considered.

22. "Pass through" means the discharge which exits the POTW into waters of the State in quantities or concentrations which, alone or in conjunction with a discharge or discharges from other sources, is a cause of a violation of any requirement of the POTW's WPDES permit (including an increase in the magnitude or duration of a violation). A discharger significantly contributes to such a permit violation when it:

a. Discharges a daily pollutant loading in excess of that allowed by a city issued discharge permit, this ordinance, or any state or federal regulation;

b. Discharges wastewater which substantially differs in nature and constituents from the discharger's average discharge;

c. Knows or has reason to know that its discharge alone or in conjunction with the discharges from other dischargers, would result in a permit violation;

d. Knows or has reason to know that the city is, for any reason, violating the final effluent limitations of the city's permit, and that the discharger's discharge, either alone or in conjunction with other discharges, increases the magnitude or duration of the city's violation.

23. "Person" means any individual, partnership, co-partnership, firm, company, corporation, association, joint stock company, trust, estate, governmental entity, or any other legal entity; or their legal representatives, agents, or assigns. This definition includes all federal, state, and local governmental entities.

24. "Plumbing supervisor" means the city plumbing inspector or the authorized deputy, agent, or representative of the plumbing inspector.

25. "Pretreatment" means the reduction of the amount of pollutants, the elimination of pollutants, or the alteration of the nature of pollutant properties in wastewater prior to, or in lieu of, introducing such pollutants into the POTW. This reduction or alteration can be obtained by physical, chemical, or biological processes; by process changes; or by other means, except by diluting the concentration of the pollutants unless allowed by an applicable pretreatment standard.

26. "Pretreatment standard" means any pretreatment limit or prohibitive federal, state or local standard contained in this ordinance deemed to be the most restrictive under which Industrial Users will be required to comply.

27. "pH" means the negative logarithm of the hydrogen ion concentration in moles per liter of solution.

28. "POTW" means a publicly owned treatment works as defined by section 212 of the act that is owned by the city. This definition includes any devices or systems used in the collection, storage, treatment, recycling, and reclamation of sewage or industrial wastes of liquid nature. This does not include any pipes, sewers, or other conveyances not connected to a facility providing treatment.

29. "Properly shredded garbage" means the wastes from the preparation, cooking and dispensing of foods that have been shredded to such a degree that all particles will be carried freely under the flow conditions normally prevailing in public sewers, with no particle greater than one-half inch in dimension.

30. "Public wastewater collection system" means a system of sanitary sewers owned, maintained, operated and controlled by the city.

31. "Replacement costs" means expenditures for obtaining and installing the equipment, accessories, or appurtenances which are necessary during the service life of the sewage treatment plant to maintain the capacity and performance for which such plant was designed and constructed.

32. "Residential user" means a place which is connected to the public wastewater collection system, as distinct from industrial or commercial users.

33. "Sanitary sewer" means a pipe or conduit, owned and maintained by the City, which carries wastewater.

34. "Severe property damage" means substantial physical damage to property, damage to the treatment facilities which causes them to become inoperable, or substantial and permanent loss of natural resources which can reasonably be expected to occur in the absence of a bypass. Severe property damage does not mean economic loss caused by delays in production.

35. "Sewage" means wastewater.

36. "Sewer service charge" means a charge levied on users of a sanitary sewer to maintain said sewer in operational condition.

37. "Signatory requirements" means requirements that all reports be signed by the following:

a. By a responsible corporate officer if the User is a corporation. A responsible corporate officer means:

1) A president, secretary, treasurer, or vice-president of the corporation in charge of a principal business function, or

2) A manager of one or more manufacturing, production, or operation facilities employing more than 250 persons, or having gross annual sales or expenditures exceeding $25 million (in second-quarter 1980 dollars), if authority to sign documents has been assigned or delegated to the manager in accordance with corporate procedures.

b. By a general partner or proprietor if the User is a partnership or sole proprietorship, respectively.

c. By a duly authorized representative of the individual designated in paragraphs (a) or (b) above if:

1) The authorization is made in writing by the individual described in paragraph (a) or (b) above.

2) The authorization specifies either an individual or a position having responsibility for the overall operation of the facility from which the discharge originates, or having overall responsibility for environmental matters for the User.

3) The authorization is submitted to the POTW prior to or concurrent with required reports.

38. "Significant industrial user (SIU)" means all industrial users subject to categorical pretreatment standards under 40 CFR 403.6 and 40 CFR chapter I, subchapter N; and any other industrial user that: discharges an average of 25,000 gallons per day or more of process wastewater to the POTW (excluding sanitary, noncontact cooling and boiler blowdown wastewater); contributes a process wastestream which makes up 5 percent or more of the average dry weather hydraulic or organic capacity of the POTW treatment plant; or is designated as such by the City on the basis that the industrial user has a reasonable potential for adversely affecting the POTW's operation or for violating any pretreatment standard or requirement in accordance with 40 CFR 403.8(f)(6).

39. "Significant noncompliance (SNC)" is a violation that meets any of the following criteria:

a. Chronic violations of wastewater discharge limits, defined here as those in which sixty-six percent (66%) or more of all the measurements taken during a six-month period exceed the daily maximum limit or average limit for the same pollutant parameter:

b. Technical review criteria (TRC) violations, defined here as those in which thirty-three percent (33%) or more of all the measurements for each pollutant parameter taken during a six-month period equal or exceed the product of the daily maximum limit or the average limit multiplied by the applicable TRC (TRC=1.4 for BOD, TSS, fats, oil, and grease, and 1.2 for all other pollutants except pH); or exceed the upper or lower limits of pH by 0.4 standard units or more;

c. Any other violation that the city believes has caused, alone or in combination with other discharges, interference or pass through (including endangering the health of city personnel or the general public);

d. Any discharge of a pollutant that has caused imminent endangerment to human health, welfare or to the environment or has resulted in the POTW's exercise of its emergency authority.

e. Failure to meet, within 90 days of the scheduled date, a compliance milestone contained in a wastewater discharge permit or enforcement order for starting or completing construction, or attaining final compliance;

f. Failure to provide, within 30 days of the due date, any required reports such as baseline monitoring reports, 90-day compliance reports, periodic self-monitoring reports, and reports on compliance with compliance schedules;

g. Failure to accurately report noncompliance;

h. Any other violation(s) which the city determines will adversely affect the operation or implementation of the local pretreatment program.

40. "Slug" or "slug discharge" means any discharge at a flow rate or concentration which could cause a violation of the prohibited discharge standards in section 15.08.070 or any discharge of a nonroutine, episodic nature, including an accidental spill or a noncustomary batch discharge.

41. "Surge" means a quantity of flow discharged from any source which causes the public wastewater collection system to become surcharged at any point.

42. "Total suspended solid (TSS)" means solid or particulate matter that either floats on the surface of, or is in suspension in water, wastewater or other liquids, and that are removable by laboratory filtration as defined under the standards set forth in 40 CFR Part 136.

43. "User charge" means a charge levied on users of a treatment works for the user's proportionate share of the cost of operation and maintenance, including replacement, of such works under sections 204(b)(1)(A) and 201 (h)(2) of the clean water act and section 15.04.030 of this chapter.

44. "User" means any place or establishment which is connected to the public wastewater collection system.

45. "Unaltered water" means waters which are not changed chemically or physically as a result of use.

46. "Upset" means an exceptional incident in which there is unintentional and temporary noncompliance with pretreatment standards because of factors beyond the reasonable control of the user. An upset does not include noncompliance to the extent cause by operational error, improperly designed treatment facilities, inadequate treatment facilities, lack of preventive maintenance, or careless or improper operation.

47. "Utilities administrator" means the city utilities administrator or the authorized deputy, agent, or representative of the Utilities Administrator.

48. "Wastewater" means a combination of the water-carried wastes from residential users, commercial users, manufacturing facilities, and industrial users; whether treated or untreated, which are contributed to the POTW.

49. "Wastewater treatment plant" means any arrangement of devices and structures used for treating wastewater.

50. "Wastewater treatment system" means the POTW and all publicly-owned pipes, mains, sewers and facilities, and appurtenances for the collection and transportation of wastewater to the POTW.

51. "Watercourse" means a channel in which a flow of water occurs, either continuously or intermittently.

52. "Winter quarter", as applied to a lot, parcel of land, building or premises, means the months of November, December and January, the months of December, January and February, or the months of January, February and March, which period is used in computing the water charges upon said lot, parcel of land, building or premises.

53. "WPDES" means the Wisconsin pollution discharge elimination system. (Ord. 5418 §1, 1994; Ord. 5326 §1, 1993; Ord. 4519 §1, 1984; Ord. 4172 §1, 1981).

15.04.030 Wastewater service charge. A. For municipalities subscribing to wastewater treatment service, the municipality shall charge all users of the wastewater collection system and wastewater treatment facility based on actual use or estimates of use. The service charge shall consist of charges for plant operation and maintenance, replacement and debt service. Applicable charges shall be computed and levied as follows:

1. The plant operation and maintenance charge shall be computed by dividing the estimated annual cost for plant operation and maintenance by the estimated flow to be received at the treatment facility;

2. The replacement charge shall be computed by dividing the estimated annual cost for replacement of equipment by the estimated flow to be received at the facility;

3. The debt service charge shall be computed by dividing the annual debt service of all outstanding loans for the wastewater treatment plant by the estimated flow to be received at the facility;

4. The collection system maintenance charge shall be computed by dividing the estimated operation and maintenance cost by the estimated flow to the collection system;

5. A surcharge shall be levied on all users for plant operation and maintenance whose wastewater exceeds the normal concentrations of domestic wastewater. For purposes of this calculation, normal concentrations of domestic wastewater means that which contains a maximum concentration of BOD_5 and suspended solids of 250 mg/l each. All users shall pay, as a minimum, the same rate per volume as that paid by residential users. An additional charge shall be paid by each user who discharges any toxic pollutants which cause an increase in the cost of managing the effluent or the sludge disposal of the treatment works.

B. For users within the city, the City shall charge all users of the wastewater collection system and wastewater treatment facility based on actual use or estimates of use. The service charge shall consist of charges for plant operation and maintenance, replacement, debt service charge, and collection system maintenance, plus any applicable surcharge. Applicable charges shall be computed and levied as follows.

1. The operation and maintenance charge shall be computed by dividing the estimated annual cost for wastewater treatment by the billable flow.

2. The replacement charge shall be computed by dividing the estimated annual cost for replacement of treatment works equipment by the billable flow.

3. The debt service charge shall be computed by dividing the annual debt service of all outstanding loans for the wastewater treatment plant by the billable flow.

4. The collection system maintenance charge shall be computed by dividing the estimated cost by the billable flow.

5. A surcharge shall be levied on all users for plant operation and maintenance whose wastewater exceeds the normal concentrations of domestic wastewater. For purposes of this calculation, normal concentrations of domestic wastewater means that which contains a maximum concentration of BOD_5 and suspended solids of 250 mg/l each. All users shall pay, as a minimum, the same rate per volume as that paid by residential users. An additional charge shall be paid by each user who discharges any toxic pollutants which cause an increase in the cost of managing the effluent or the sludge disposal of the treatment works.

6. Billing. Billing intervals shall be quarterly or as may be otherwise established by the city council. Each user shall be notified, at least annually, in conjunction with a regular bill, of the total charge portion attributable to operation and maintenance costs for wastewater treatment service.

7. Wastewater Charges. Charges under this chapter shall be as stated in the City of Eau Claire Schedule of Fees and Licenses.

8. Surcharge. The amount of surcharge for BOD or suspended solids, or both, shall be determined based on the following formula with a rate as stated in the City of Eau Claire Schedule of Fees and Licenses:

$C_s = 8.34\ V_u\ [B_cB + S_cS]$ where:

C_s = amount of surcharge, always greater than zero

V_u = wastewater volume, in million gallons, for billing period

B_c = Rate/# BOD_5

B = BOD_5 discharge, minus 250 mg/1 (always zero or positive)

S_c = Rate/# suspended solids

S = suspended solids discharged, minus 250 mg/1 (always zero or positive).

9. Charges for waste hauled to the POTW shall be as stated in the City of Eau Claire Schedule of Fees and Licenses. The charge for wastes other than septage or holding tank wastes shall be based upon the charge in this section and any surcharge imposed under s. 15.04.030 B. 8., plus any additional charge. An additional charge shall be imposed to cover the labor and overhead costs of the city in excess of the normal and usual costs which are required in connection with the administration of the disposal of such wastes.

10. Audits.

a. The city shall maintain and keep proper books of records and accounts, separate from all other records and accounts, in which shall be made full and correct entries of all transactions relating to the system. The city shall cause an annual audit of such books of record and account for the preceding operating year to be made by a recognized independent certified public accountant, and shall supply this audit report to authorized public officials on request.

b. An audit of the user charge system established hereunder shall be made, biennially, by a recognized independent certified public accountant or by the city professional staff to assure the following:

1) Proportionate distribution of operation and maintenance costs among users;

2) Generation of sufficient revenue from the user charge system to defray total costs of operation and maintenance; and

3) Application of excess revenues collected from a class of users to the costs of operation and maintenance attributable to that class for the next year, and recommendation of an adjustment of the rate accordingly.

11. Pretreatment standards. The pretreatment standards issued under section 307(b) of the act and 40 CFR 403 are adopted and incorporated herein and made a part hereof by reference as if fully set forth herein. (Ord. 7425 §18, 2021; Ord. 7399, 2020; Ord. 7347, 2019; Ord. 7301, 2018; Ord. 7256, 2017; Ord. 7208, 2016; Ord. 7162, 2015; Ord. 7110, 2014; Ord. 7072, 2013; Ord. 7023, 2012; Ord. 6987, 2011; Ord. 6938, 2010; Ord. 6899, 2009; Ord. 6860, 2008; Ord. 6800, 2007; Ord. 6462, 2003; Ord. 5668, 1997; Ord. 5557, 1995; Ord. 5461, 1994; Ord. 5418 §1, 1994; Ord. 5372, 1993; Ord. 5350, 1993; Ord. 5326 §2, 1993; Ord. 5288, 1992; Ord. 5197, 1991; Ord. 5111, 1990; Ord. 4943, 1989; Ord. 4530 §1, 1985; Ord. 4300, 1982; Ord. 4172 §3, 1981).

15.04.035 Wholesale charge. A. A wholesale sewer usage charge shall be applied only to those accounts that have verified leaks in their water system. The volume of wasted water shall be the leak multiplied by the wholesale rate for sewer and this shall be added to the customer's regular sewer usage to determine a quarterly billing. The wholesale rate for sewer usage shall be the current sewer use charge per 100 cu. ft. minus the allocation for the collection system maintenance charge.

B. Residential customers who have a verified leak in their water system will receive the adjustment only during the winter quarter. The other quarters shall have a ceiling pursuant to section 15.04.040.

C. Commercial, industrial and public accounts that have a verified leak in their water system may apply for an adjustment in any quarter.

D. This section shall be applicable to any billings submitted subsequent to January 1, 1985. (Ord. 5418 §1, 1994; Ord. 4581, 1985).

15.04.040 Charge based upon water consumption. A. The wastewater service charge shall be based upon and determined by the volume of water provided to the user as measured by water meters provided and installed by the city, except as otherwise provided in this chapter.

B. The wastewater service charge for single-family residences, two-family residences, and churches shall be not exceed the volume of water provided to the user during the winter quarter ending in that same year, provided that such volume of use is based upon an actual meter reading. Where no actual meter reading exists for the winter quarter, the wastewater service charge shall be based upon the actual water usage for each current billing quarter. The winter quarter charge for residential and church customers shall apply until a new winter quarter rate is established. (Ord. 7038 §1, 2012; Ord. 6212 §7, 2001; Ord. 5418 §1, 1994; 5169 §1, 1991; Ord. 4740 §1, 1987; Ord. 4292, 1982; Ord. 4265 §2, 1982; Ord. 4172 §2 [part]).

15.04.050 Meter equipment installation. In the event any lot, parcel of land, building or premises discharging sewage into the sanitary sewer system of the city is not supplied with water from a municipal system and does not have a water meter to measure such water supply, the owner or occupant of any such property shall install, or allow to be installed, all at the expense of the owner or occupant, such necessary metering equipment, approved by the city, to measure all water consumed upon the premises. Until such installation is made and water measurement for the winter quarter applicable to said premises can be obtained, the sewerage service charge herein imposed shall be the average rate charged for sewerage service for all like customers within a similar classification within the city for the same quarterly billing period.

Upon and after installation of such water measuring device, the sewerage service charge established hereby shall be based upon the quantity of water measured by such measuring device. The city shall have the right to enter upon and inspect any premises subject to this chapter and to inspect any meters installed hereunder to determine compliance with the provisions of this chapter. (Ord. 5418 §1, 1994; Ord. 4172 §2 [part], 1981).

15.04.060 Measurement of water consumption not yet determined--Charges. The sewerage service charge for any residential lot, parcel of land, building or premises which begins receiving municipal sewer service after the end of the immediately previous winter quarter applicable thereto and where there exists no adequate measure of water consumed thereon for such period, or for which there is no measurement of the previous winter quarter water consumption, charges shall be based on rates as stated in the City of Eau Claire Schedule of Fees and Licenses for each one hundred cubic feet of the average residential water consumption throughout the city as computed over the three immediately previous winter quarters, which shall then be deemed to be the "winter quarter" under Section 15.04.040, for each quarterly billing period until a winter quarter charge is established. (Ord. 7425 §19, 2021; Ord. 5418 §1, 1994; Ord. 4439, 1984; Ord. 4172 §2 [part], 1981).

15.04.070 Sewerage service charge to be based on estimate made by city. Any industry, business or residence which during any calendar year produces a substantial volume of sewage which does not reach the city wastewater treatment plant, and where it is determined to the satisfaction of the city that the water consumed upon the premises during such period of time does not bear a reasonable relationship to the amount of sewage discharged to and reaching the wastewater treatment plant from such industry, business or residence, the sewerage service charge for the industry, business or residence shall be based upon an estimate made by the city, in such manner and by such methods as are reasonably practicable and accurate, of the amount of sewage which reaches the wastewater treatment plant, including a reasonable and appropriate meter charge, as determined by the city. In this section, "substantial volume of sewage" means an amount of sewage discharged from the premises over a period of time which is equal in volume to ninety-five percent or less of the volume of water consumed on the premises over the same period of time as measured by water meters. (Ord. 5418 §1, 1994; Ord. 4172 §2 [part], 1981).

15.04.090 Seasonal water usage--Charges. The sewerage service charge for any lot, parcel of land, building or premises, the water usage upon which is seasonal in nature, shall be based upon, and shall be equal to, the actual water usage upon such lot, parcel of land, building or premises for each current billing quarter. Residential customers with seasonal water usage during the winter quarter shall have their sewerage service charge based on actual meter readings provided by the customer and prorated to a full quarter for subsequent billing. (Ord. 5418 §1, 1994; Ord. 5294, 1993; Ord. 4740 §2, 1987; Ord. 4673 §1, 1986; Ord. 4172 §2 [part], 1981).

15.04.100 Water bill estimate to be used in conjunction with actual readings. In those instances where an estimate of the water bill is made for the winter quarter upon which the sewer service charge is based, such estimate shall be based upon the consumption billed during the same quarter from the previous year. If the billing quarter from the previous year is also based on an estimate, the sewer service charge shall be computed by the city based upon the best available information which reasonably and accurately reflects, insofar as practicable, the indicated sewage discharge from the premises, or from similar premises within the city, as shown by other available data. (Ord. 5418 §1, 1994; Ord. 4740 §3, 1987; Ord. 4172 §2 [part], 1981).

15.04.110 Change of occupancy--Sewer service charge to be based upon consumption of new occupants at former premises. After notice to the City, upon a change of occupancy of any residential premises following any winter quarter, of a disparity between the sewer charges applicable to the old and new premises, the city shall have the authority to base the sewer service charge upon the consumption of the new occupant or occupants at the premises which they previously occupied within the city. If no such information exists upon which to base a service charge following a change of occupancy, the sewer service charge upon the new premises shall be based upon and measured by the actual amount of water consumed upon the premises up to a maximum of 3000 cubic feet per quarter. Any such sewer service rate, when established hereunder, shall be in effect only until the following winter quarter. (Ord. 5418 §1, 1994; Ord. 5133, 1991; Ord. 4172 §2 [part], 1981).

15.04.120 Billing and collection. A. Bills for sewerage service shall be mailed to the recipient designated by the owner of the property to which the bill relates, provided that such mailing shall not relieve the owner of rental property from liability for the charges in the event payment is not made. The owner of any property which is occupied by tenants shall have the right to examine the appropriate records of the city to determine whether such rates and charges have been paid by such tenants, provided that such examination shall be made at the office at which the records are kept during normal business hours.

B. A late payment charge of 3 percent will be added to bills not paid within 20 days of issuance the same manner as water service charges under the provision of Chapter PSC 185and the provisions of Title 14 of this code.

C. All sewerage service charges shall be taxed and collected and shall be a lien upon the property served in the same manner as water service charges are taxed and collected under the provisions of Wisconsin Statutes, section 66.0809, and the provisions of title 14 of this code. (Ord. 7425 §20, 2021; Ord. 6212 §8, 2001; Ord. 5418 §1, 1994; Ord. 5169 §2, 1991; Ord. 4172 §4, [part], 1981; Ord. 4042 §4, 1979).

15.04.130 Duties and powers of officials. The city council and officers of the city, including the officials in charge of the management of the sewerage system, shall be governed in the discharge of their powers and duties by the provisions of Wisconsin Statutes, sections 66.069(1) and 66.076, which provisions are adopted and made a part of this chapter by reference. (Ord. 5418 §1, 1994; Ord. 4172 §4, [part], 1981; Ord. 3574 [part], 1975).

Chapter 15.08

SEWER REGULATIONS

Sections:

15.08.010 Administrative Code definitions.
15.08.020 Definitions.
15.08.030 Plumbing code.
15.08.033 Inspections--Procedure.
15.08.037 Power to deem safe.
15.08.040 Connection to sanitary sewer.
15.08.045 Service outside corporate limits.
15.08.050 Private sewage disposal.
15.08.055 Disposal-Septage and holding tank waste.
15.08.060 Building sewers and connections.
15.08.070 General discharge prohibitions.
15.08.080 Damage to system or plant.
15.08.090 Powers and authority of plumbing supervisor and superintendent.
15.08.100 Penalty.

15.08.010 Administrative Code definitions. The definitions contained in section COMM 82.11 of the Wisconsin Administrative Code are adopted by reference to the extent that they do not conflict with specific definitions contained in section 15.08.020. (Ord. 6167 §1, 2001; Ord. 5418 §2, 1994; Ord. 4545 §1, 1985; Ord. 4475 §1, 1984; Ord. 4173 §3 [part], 1981).

15.08.020 Definitions. Unless the context specifically indicates otherwise, the meaning of terms used in this chapter shall be as contained in section 15.04.020, the "definitions" section of chapter 15.04. (Ord. 5418 §2, 1994; Ord. 4173 §3 [part], 1981).

15.08.030 Plumbing code. A. Adoption by reference. The provisions and regulations contained in chapter 145, Wisconsin Statutes, "plumbing and fire protection systems", and in the Wisconsin State Plumbing Code, Wisconsin Administrative Code chapters COMM 82, 83 and 84, adopted by the state department of commerce are adopted by reference and shall extend to and govern all plumbing in the city.

B. Plumbing supervisor. The city council shall appoint a plumbing supervisor pursuant to Wisconsin Statutes. Such plumbing supervisor shall be a citizen of the United States and shall be a licensed plumber who shall have the necessary ability to supervise the installation, alteration, maintenance or replacement of all plumbing in the city of Eau Claire. The plumbing supervisor shall serve during good behavior and satisfactory service. The plumbing supervisor shall not engage in the business of plumbing or be interested directly or indirectly with any person or in any firm or corporation engaged in such business. The plumbing supervisor, under the direction of the administrator of inspection services, shall have control of the supervision and inspection of plumbing within the city and shall faithfully enforce all laws, ordinances and rules in relation thereto. The plumbing supervisor shall determine that the construction, reconstruction and alteration of all plumbing hereafter installed in all of the buildings in the city shall conform with the state laws and city ordinances and the rules and regulations of the state department of commerce, and make all inspections required.

C. Applications--Permits--Report. The inspection services division shall prepare suitable forms for applications and permits required, maintain a proper daily record of all of the office transactions and file a monthly and annual report covering the same with the city council. Applications for permits shall state the property owner's name and address. The application also shall state fully all the purposes for which the service is to be used, and such other particulars which are essential to the enforcement of this chapter and are required by the plumbing supervisor.

D. Permit--Fees.

1. No plumbing shall be done in the city, except in case of repairing leaks or stoppages, without a prior permit having been issued by the city and the payment of the proper fees as hereinafter provided. Before the issuance of such permit, the supervisor shall approve the application so filed and issue to the applicant a statement showing the fees to be paid for such permit. This statement shall be filed with the city treasurer, and the fees shall be paid to the treasurer, who shall issue a receipt therefor. Upon presentation to the plumbing supervisor of said receipt showing the payment of all permit fees, the permit shall be issued for the work set forth in the application. The applicant shall be responsible for paying the applicable street opening fee established under section 13.10.070 and for complying with all other applicable requirements of chapter 13.

2. The schedule of fees to be paid shall be as stated in the City of Eau Claire Fees and Licenses Schedule.

3. Except for water heaters, no fee or charge shall be imposed for the installation or replacement of existing fixtures with no alteration to existing waste or water piping. The applicable fee shall be doubled for work which is commenced without obtaining a permit therefor in advance. A plumbing permit shall have lapsed and be void unless work authorized by such permit is commenced within six months from the date of issuance thereof. Permits may be renewed at a fee as stated in the City of Eau Claire Fees and Licenses Schedule within six months from the date of lapse. A permit shall expire if work on a project is ceased for a period of twelve months or if thirty-six months has elapsed since permit issuance. Expired permits may be reissued at the regular permit fee. All code and ordinance requirements in effect at the time of renewal or reissuance shall apply to the project.

4. No person shall interfere in any way with the work of the plumbing supervisor, or permit any plumbing to be used until it has been inspected and approved by said supervisor, unless special permission therefor is given by the city council.

5. Plan examination and approval service shall be provided by the inspection services division for the following types of buildings or additions and alterations to these buildings located within the corporate limits of the city, in accordance with the provisions of section 145.02(3)(g) of the Wisconsin Statutes, and section COMM 82.20(2) of the Wisconsin Administrative Code. Plan submittal is required when such plumbing installation involves 11 or more plumbing fixtures:

a. Theaters and assembly halls;
b. Schools and other places of instruction, except state-owned schools;
c. Apartment buildings, hotels, resorts and places of detention;
d. Factories, offices and mercantile buildings.

6. Before performing the plumbing plan examination and approval service for the above-classified buildings, the owner or his agent shall pay to the city treasurer the same fees as set forth in section COMM 2.64 of the Wisconsin Administrative Code.

7. After written approval is granted, no plan or specifications of any plumbing system shall be changed without the written consent of the city building inspection division and the architect, engineer, designer or master plumber responsible for the design.

E. Plumbing Inspection. The plumber in charge or the owner shall make such arrangements as will permit ready access to all parts of the building and the easy inspection of the plumbing work. The plumber shall notify the plumbing supervisor when work is ready for final inspection. The plumbing supervisor shall apply a sticker or tag to approved installations when the plumber or permittee is not present. Whenever it is determined that the plumbing in any building is contrary to the ordinances of the city, or is of faulty construction and liable to breed disease or sickness, or is a menace to health, the plumbing supervisor shall direct such changes as are necessary to put the same in proper sanitary condition and shall fix a reasonable time for doing the same. Any person refusing to comply therewith shall be guilty of a violation of this chapter. Each day or part thereof that such violation continues shall constitute a separate offense. The plumbing supervisor shall, by permission of the owner or occupant, or by due process of law consistent with the provisions of Wisconsin Statutes s. 66.0119, enter during reasonable hours any building or premises to make an inspection of and to require the production of a permit where there is reasonable cause to believe the work is being done or has been performed in violation of this chapter. No person shall refuse to permit such entry in the case of an emergency, or in any other case after a valid special inspection warrant has been duly issued therefor under Wisconsin Statutes s. 66.0119, nor shall any person interfere with said inspector in the performance of his or her duties. (Ord. 6363 §35, 2002; Ord. 6238 §1, 2001; Ord. 6167 §2, 2001; Ord. 5484 §5, 1994; Ord.

5438 §§1, 2, 1994; Ord. 5418 §2, 1994; Ord. 5268, 1992; Ord. 4789 §17, 1987; Ord. 4545 §2, 1985; Ord. 4475, §§2, 3, 4, 1984; Ord. 4263 §1, 1982; Ord. 4211 §1 1981; Ord. 4173 §3 [part], 1981).

15.08.033 Inspections--Procedure. In any new building, addition, or alteration, immediately upon completion of those portions of the installation that are thereafter to be concealed or covered, the plumbing contractor or homeowner shall notify the plumbing supervisor, giving the location of the work and the portions of the installation ready for inspection, and it shall be unlawful for any person, firm, or corporation to apply wall or ceiling coverings or cover up any plumbing work before such work has been inspected and due notice has been given that the work has been approved. The plumbing supervisor shall have the right and authority to order the removal of all such coverings that may have been placed over such work before same has been inspected. The plumbing supervisor shall make such inspection within 2 working days after notice, excepting Sundays and holidays. Final inspection on new installations shall be made upon completion of such work. Inspection of replacement or conversion work shall be made upon completion of such work. Upon inspection or reinspection of a plumbing system, any defects or code violations that require repair to assure safe operation shall be rectified before the system is placed in use. (Ord. 6167 §3, 2001).

15.08.037 Power to deem unsafe. A system or any part thereof that is found to be unsafe to life or property shall be deemed unsafe and shall not be restored to use until such system has been made safe and approved. (Ord. 6167 §4, 2001).

15.08.040 Connection to sanitary sewer. A. The owner of any house, building or property used for human occupancy, employment, recreation, or other similar purpose, situated within the jurisdiction of the city, wherein sanitary sewer service is readily available, is required at the owner's expense to install suitable toilet facilities therein, and to connect such facilities directly with the public wastewater collection system in accordance with the provisions of this chapter, within one (1) year after the date sanitary sewer is deemed available by the director of community services or designee. Such time may be extended upon specific written authorization from the director of community services or designee in the event of unfavorable weather conditions, except when an imminent health hazard exists.

B. If any person fails to connect to the sanitary sewer collection system within the time contained in the city code or in the manner prescribed by the plumbing code for more than 10 days after notice in writing, the city may cause connection to be made, and the expense thereof assessed as a special tax against the property in accordance with Wisconsin Statutes s. 281.45. The owner may, within 30 days after completion of the work, file a written option with the city clerk stating that he or she cannot pay the amount in one sum and asking that it be levied in not to exceed five (5) equal annual installments, and the amount shall be collected with interest at a rate of 6% per year from the completion of the work. The unpaid balance of the special tax shall be placed as a special tax lien on the property.

C. No sewer service shall pass under or through a building to serve another building.

D. It is unlawful for any person to place, deposit or permit to be deposited any wastewater on the ground surface of any public or private property within the jurisdiction of the city except as authorized by the DNR or other governmental agency having jurisdiction thereof or the health department.

E. It is unlawful to discharge any wastewater to any natural outlet except as authorized by the DNR.

F. Except as provided in section 15.08.050, it is unlawful to construct or maintain any privy, privy vault, septic tank, cesspool, or other facility intended or used for the disposal of wastewater. (Ord. 7202, 2016; Ord. 6739, 2006; Ord. 5418 §2, 1994; Ord. 4173 §3 [part], 1981).

15.08.045 Service outside corporate limits. A. The city does herewith limit its extension of sewer service as provided in this section. Only in exceptional cases and when authorized by the city council may sewer service be furnished to properties located outside of the corporate limits of the city.

B. The territory to which sewer service outside the corporate limits of the city shall be limited shall be as follows:

1. The territory described as the sewer service area in the wastewater service agreement between city of Eau Claire, city of Altoona and Washington heights sanitary district, dated November 17, 1977, as amended, a copy of which is on file in the office of the city clerk and open to public inspection during normal business hours.

2. All lands located in the North 660 feet of the NE-1/4 of the NW-1/4 of the SW-1/4 of Section 33, Township 27 North, Range 9 West, shall be deemed to be immediately abutting any easement granted for interceptor sewer purposes across said lands and thus eligible for sewer service under the wastewater service agreement, as amended, described in paragraph 1. of this subsection.

3. Parcels of land located in the town of Union and immediately abutting the described portions of the following streets: Sherman Creek Road, from the city limits to Kernan Court; Kernan Court, from Sherman Creek Road to Cameron Street; Cameron Street, from Kernan Court to Dorret Road; Dorret Road, from Cameron Street to Vine Street; and Frank Street, from Preston Road to Dorret Road.

C. The rendering of such service as provided in this section shall not be deemed to be holding out or an offer by the city to furnish sewer service beyond its corporate limits.

D. All persons receiving sewer service as provided in this section shall fully comply with all the requirements as to plumbing, safeguarding and use applicable to users of sewer service within the city limits. Mains or services laid and the installation thereof outside the city limits shall be in accordance with the specifications of and under the supervision of the city utilities division and be approved thereby. Maintenance of such mains or services shall conform to general city requirements.

E. Customers receiving sewer service in accordance with the provisions of this section shall be subject to the sewerage service charge and any other fee or charge imposed for sewer service by the city council. (Ord. 5643, 1996; Ord. 5418 §2, 1994; Ord. 4403, 1983).

15.08.050 Private sewage disposal. A. Where a sanitary sewer is not available, the building sewer shall be connected to a private sewage system complying with the provisions of this section and chapter ILHR 83, Wisconsin Administrative Code.

B. A permit for a private sewage system shall not become effective until the installation is completed and approved by the city.

C. At such time as a sanitary sewer becomes available to a property served by a private sewage system, as provided in section 15.08.040, a direct connection shall be made to the sanitary sewer in compliance with this chapter and any septic tanks, cesspools and similar private sewage facilities shall be abandoned in accordance with section ILHR 83.03, Wisconsin Administrative Code, within sixty days of said connections unless special permission is granted by the board of health for a time extension due to the inclement weather conditions.

D. The owner shall operate and maintain the private sewage system in accordance with chapter ILHR 83, Wisconsin Administrative Code, at no expense to the city. (Ord. 5418 §2, 1994; Ord. 4474 §5, 1984; Ord. 4173 §3 [part], 1981).

15.08.055 Disposal--Septage and holding tank waste. The purpose of this section is to permit the disposal and treatment of a limited amount of septage and holding tank waste emanating from properties where facilities discharging septage and holding tank waste are essential to the appropriate use of the property, and where discharge to the wastewater treatment plant is an absolute necessity.

A. The city shall accept and treat septage or holding tank waste at the wastewater treatment plant from a licensed disposer holding a permit under subsection B. In this section, "licensed disposer" means a person licensed under s. 146.20, Wis. Stats.

B. No person shall discharge septage or holding tank waste to the wastewater treatment plant without having a current valid permit to make such discharge. An application shall be made to the director of community services on forms directed by the director. The permit shall be issued, without charge, by the director of community services or designee. All permits shall expire on June 30 of each year.

C. A person receiving a permit under this section shall comply with all provisions of this title and ss. 144.08 and 146.20, Wis. Stats., and ch. NR 113, Wisconsin Administrative Code. Failure to comply with such provisions may result in suspension or revocation of the permit. Chapter 68, Wis. Stats., shall apply to any such suspension or revocation.

D. The city is not required to accept sewage from a permittee if:

1. Treatment of the septage would cause the sewage system to exceed its operating design capacity or to violate any applicable effluent limitations or standards, water quality standards or any other legally applicable requirements, including court orders or state or federal statutes, rules, regulations or orders;

2. The septage is not compatible with the sewage system;

3. The permittee has not applied for and received approval to dispose of septage in the sewage system or fails to comply with the disposal plan of the city adopted under subsection I;

4. The permittee fails to comply with septage disposal rules promulgated by the city.

E. If the city can accept some, but not all, of the septage offered for disposal, the city may accept septage which is generated within the sewage service area before accepting septage which is generated outside the sewage service area.

F. The city may impose reasonable terms and conditions for septage disposal including:

1. Specific quantities, locations, times and methods for discharge of septage into the sewage system;

2. Requirements to report the source and amount of septage placed in the sewage system;

3. Requirements to analyze septage characteristics under subsection H.

G. All persons discharging septage or holding tank waste pursuant to this section shall pay the discharge fee as stated in the City of Eau Claire Schedule of Fees and Licenses. Failure to pay such fee shall subject the permittee to revocation or suspension as provided herein.

H. The city may require the permittee to analyze representative samples of septage placed in the sewage system, except for septage from exclusively residential sources. Such analysis shall determine the characteristics of the septage and the compatibility of the septage with the municipal sewage system.

I. The city shall prepare a disposal plan for each permittee. The disposal plan shall consist of the approved application and all terms and conditions imposed on the permittee.

J. Nothing in this section shall be deemed to be or considered to constitute a holding out or offer by the city to furnish sewer service beyond its corporate limits. (Ord. 7425 §21, 2021; Ord. 7202, 2016; Ord. 5418 §2, 1994; Ord. 5326 §3, 1993).

15.08.060 Building sewers and connections. A. There shall be two classes of building sewer permits:

1. For establishments producing only domestic wastewaters including residences, institutions, public facilities, and commercial establishments; and

2. For service to establishments producing industrial wastewater.

In either case, the owner or owner's representative shall make application on a special form furnished by the city. The permit application shall be supplemented by any plans, specifications or other information considered pertinent in the judgment of the city.

B. All cost and expense incident to the installation and connection of the building sewer shall be borne by the owner. The owner shall by application indemnify the city from any loss or damage that may directly or indirectly be occasioned by the installation of the building sewer.

C. A separate and independent building sewer shall be provided for each building having plumbing facilities in accordance with chapter ILHR 82, Wisconsin Administrative Code.

D. Existing building sewers may be used in connection with new buildings only when they are found, on examination and test, to the satisfaction of the city, to meet all requirements of this chapter.

E. Whenever possible, the building sewer shall be brought to the building at an elevation below the basement floor. In all buildings in which any building drain is too low to permit gravity flow to the sanitary sewer, wastewater carried by such a building drain shall be lifted and discharged to the building sewer by facilities conforming to chapter ILHR 82, Wisconsin Administrative Code.

F. No person shall make, permit or maintain the connection of roof downspouts, exterior foundation drains, areaway drains, basement sump pumps or other sources of surface runoff or groundwater to a building sewer or building drain which in turn is connected directly or indirectly to a sanitary sewer, unless the DNR or other governmental agency having jurisdiction thereof, by official action, does not permit the discharge of such surface runoff or groundwater into an available storm sewer.

G. The city shall keep a record of all connections, and shall make maps showing location of same, and the position of all building sewers, connections, junctions, and other necessary data.

H. Whenever it is necessary to disturb a building sewer in actual use, the same shall not be obstructed or disconnected without special permission of the city. It shall be unlawful to make any new connections with, or extensions to, any existing building sewer without permission of the plumbing supervisor.

I. In all cases where the course of any building sewer is obstructed by pipes, conduits, or other obstruction, the question of passing over or under such obstruction or of the raising or lowering thereof so as to permit the construction and installation of the building sewer, or the alteration or removal of the obstruction, shall be determined by the city.

J. No person shall permit any earth, sand or other solid material to enter into any sanitary sewer during the progress of any work in laying building sewers, making alterations, extensions or repairs to the same, or in connecting such building sewers with the sanitary sewers in the city. (Ord. 5418 §2, 1994; Ord. 4475 §§5, 6, 1984; Ord. 4173 §3 [part], 1981).

15.08.070 General Discharge Prohibitions. A. No user shall discharge or cause or permit to be discharged any storm water, surface water, groundwater, roof runoff, subsurface drainage, or any other unaltered water to any sanitary sewer, unless the DNR or other governmental agency having jurisdiction thereof, by official action does not permit the discharge of such surface runoff or groundwater into an available storm sewer.

B. The city may refuse to accept any or all industrial wastewaters from an industry, or combination of industries as necessary to insure adequate wastewater treatment and proper operation of the public wastewater collection system.

C. No user shall discharge or cause or permit to be discharged any of the following pollutants, substances, or wastewater into the public wastewater collection system:

1. Gasoline, benzene, naphtha, fuel oil, or other flammable or explosive substances;

2. a. Pollutants which, by reason of their nature or quantity, may create a fire or explosion hazard or be injurious to the POTW or to the operation of the POTW, including, but not limited to, wastestreams with a closed cup flashpoint of less than 140 degrees or 60 degrees using the test methods specified in 40 CFR 261.21;

b. Pollutants which result in the presence of toxic gases, vapors, or fumes within the POTW in a quantity that may cause acute worker health and safety problems.

3. Wastewater having corrosive properties capable of causing damage or creating a hazard to structures, equipment or personnel of the wastewater treatment plant;

4. Unground garbage, fluids or solid substances in such quantities or of such size or configuration as to cause obstruction to the flow in sanitary sewers, or other interference with the proper operation of the wastewater treatment plant such as but not limited to, disposable diapers, sanitary napkins, pads, packaging, ashes, cinders, clay, sand, mud, straw, shavings, metal, glass, rags, feathers, tar, plastics, wood, whole blood, paunch manure, hair and fleshings, entrails, paper dishes, cups, and milk containers, which are either whole or ground by garbage grinders.

D. No user shall discharge or cause to be discharged into the public wastewater collection system the following specifically described substances, materials, fluids, or solids which may harm sanitary sewers, wastewater treatment processes and equipment, have an adverse effect on the receiving stream, or otherwise endanger health and safety, public property, or constitute a nuisance, without the specific written permission of the city. Such permission is subject to termination at any time upon written notice. In forming the opinion as to the acceptability of these wastes, the city shall give consideration to such factors as the quantities of subject wastes in relation to flows and velocities in the sanitary sewers, the materials of construction of the sanitary sewers, the nature of the wastewater treatment plant process, the capacity of the wastewater treatment plant, and any other pertinent factors. The substances prohibited are:

1. Any fluid having a temperature higher than 150° F (65.5° C) at the discharge point to the public wastewater collection system;

2. a. Any liquid containing fats, wax, grease, or oils of animal or vegetable origin, whether emulsified or not, in a combined concentration exceeding 100 mg/l or containing substances which may solidify or become viscous at temperatures between 32° F (0° C) and 150° F (65.5° C);

b. Any liquid containing fats, wax, grease, or oils, of petroleum or mineral origin, whether emulsified or not, in a combined concentration exceeding 100 mg/l, measured on an average daily basis, or containing substances which may solidify or become viscous at temperatures between 32° F, (0° C) and 150° F (65.5° C);

c. Petroleum oil, nonbiodegradable cutting oil, or products of mineral oil origin in amounts that will cause interference or pass through;

d. Noxious or malodorous liquids, solids, or gases which either singly, or by interaction with other wastes, are capable of creating a public nuisance or hazard to life, or are or may be sufficient to prevent safe entry into the wastewater treatment system for the purpose of monitoring, maintenance, or repair.

3. Any garbage that has not been properly shredded, or solid material having any dimension greater than one-half inch. The installation and operation of any residential garbage grinder equipped with a motor of three-fourths horsepower or greater shall be subject to the review and approval of the plumbing supervisor;

4. Any fluid or solid containing chromium, copper, zinc, cyanide and similar objectionable or toxic substances which exceed the pretreatment limitations established for such materials by the EPA. Refer to local limits in sec. 15.12.020 B of this chapter;

5. Any fluid or solid containing phenols or other taste-producing or odor-producing substances, in such concentrations exceeding limits which may be established by the superintendent as necessary, or exceeding limits established by the state, federal, or other public agencies having jurisdiction for such discharge to the receiving waters;

6. Any radioactive wastes or isotopes of such half-life or concentration as may exceed limits established by state or federal regulations;

7. Any liquid having a pH lower than 6.0 or in excess of 10.5;

8. Materials which exert or cause:

a. Concentrations of inert suspended solids such as, but not limited to, fullers earth, clays, lime slurries, and lime residues, or of dissolved solids, which are detrimental to the treatment processes,

b. Excessive discoloration such as, but not limited to, dye wastes and vegetable tanning solutions,

c. BOD_5, chemical oxygen demand or chlorine requirements in quantities in excess of that found in domestic sewage,

d. Unusual volume of flow or concentration of wastes constituting slugs or surges;

9. Fluids or solids containing substances which are not treatable by the wastewater treatment processes employed.

10. Any trucked or hauled pollutants, except at discharge points designated by the POTW.

E. If any wastewater is discharged, or is proposed to be discharged to the public wastewater collection system which contains the substances or possesses the characteristics enumerated in subsections

C or D of this section, or which, in the judgment of the city, may affect the wastewater treatment works' ability to meet the WPDES permit requirements, or which otherwise creates a hazard to life or constitutes a public nuisance, the city may in writing require any or all of the following:

1. Rejection of the wastes;
2. Pretreatment to an acceptable condition prior to discharge to the sanitary sewers;
3. Flow equalization of the rate of discharge;
4. Payment to cover the added cost of handling and treating the wastes.

If the city requires the pretreatment or equalization of waste flows, plans and specifications in connection therewith shall be submitted by the User to the city engineer for review and approval prior to construction.

F. Grease and oil separators and sand interceptors shall be provided by restaurants, car washes, and service stations or when, in the opinion of the city, they are necessary for the proper handling of liquids containing grease in excessive amounts, flammable fluids, sand, or other harmful ingredients, except that such interceptors and separators shall not be required for private living quarters or dwelling units. All separators and interceptors shall be of a type and capacity approved by the city shall be located as to be readily and easily accessible for cleaning and inspection. The owner thereof shall clean and maintain the separators and interceptors as required to eliminate the discharge of any grease, oil, sand, or flammable fluids to the sanitary sewer. The owner shall maintain a record, for review by the city, of all maintenance and inspection of the system and shall assist the city, as required, in evaluating the system.

G. Where pretreatment or flow-equalizing facilities are provided, they shall be maintained continuously in satisfactory condition and effectively operated by the owner at his expense. The owner shall maintain a record, for review by the city, of all maintenance and inspection of the system and shall assist the city, as may be required in evaluating the system.

H. The owner of any industry discharging industrial wastewaters in excess of ten thousand gallons but less than fifty thousand gallons per average work day on a monthly basis, or which, in the judgment of the city, discharges a toxic material, or which, in the judgment of the city has a significant impact, either singularly or in combination with other contributing industries, on the wastewater treatment plant or the quality of its effluent in a degree sufficient to require sampling only, or as required by section H62.04(4)(i), Wisconsin Administrative Code, shall install or utilize a suitable sampling manhole in accordance with said section.

1. An existing manhole may be utilized for sampling purposes if, upon examination by the City, it is found to comply with the sampling requirements, is located a point immediately prior to the sanitary sewer, and is readily accessible.

2. The manhole shall be maintained by the owner so as to be safe and accessible at all times. If any such manhole is required to be located within any public right-of-way, an encroachment shall be granted pursuant to section 66.0425, Wisconsin Statutes, and chapter 13.24 of the Eau Claire municipal code, subject to all terms and conditions contained therein.

3. The manhole shall be installed within twelve months from the effective date of this chapter, or in the case of a new facility, prior to the initial discharge of wastewater from the facility. Such time limit may be extended by the city if the city determines that installation would be facilitated thereby or if the installation cannot be made due to Acts of God, strikes, delays due to contractors, suppliers or subcontractors or other circumstances or conditions beyond the control of the industry increases so as to bring it under the requirements of this subsection, the manhole shall be installed within twelve months from the date that such increased discharge was predicted or was predictable, but no later than twelve months from the date of the actual increased discharge.

4. If there is more than one point of industrial wastewater discharge from an industry to a sanitary sewer, the city may authorize, if practicable, the installation of one or more sampling manholes at an appropriate location or locations which will provide accurate information from which the quantity and quality of the industrial wastewater from the industry can be reasonably determined.

I. As a basis for user charges and discharge control, the owner of any industry discharging industrial wastewater greater than fifty thousand gallons per average work day on a monthly basis, or which in the judgment of the city discharges a toxic material, or a material which has a significant impact either singularly or in combination with other contributing industries on the wastewater treatment plant or the quality of its effluent, shall install one or more sampling stations to monitor all wastewater discharged.

1. The sampling station shall consist of a manhole on the discharge line from the industry with a continuous volume measuring device and housing continuous volume recording instruments and an automatic flow proportional composite sampler housed at a different location. The sampler shall automatically, in proportion to volume, continuously collect representative samples of wastewater discharge.

2. If any such sampling station, or portion thereof, is required to be located within any public right-of-way, an encroachment shall be granted pursuant to section 66.0425, Wisconsin Statutes, and chapter 13.24 of the Eau Claire municipal code, subject to all terms and conditions contained therein.

3. If there is more than one point of industrial wastewater discharge from an industry to a sanitary sewer, the city may authorize, if practicable, the installation of one or more sampling stations at an

appropriate location or locations which will provide an accurate composite sample from such wastewater discharge points.

4. The owner shall record volume and operate the automatic sampler on such occasions and in the manner as deemed necessary by the city to determine a representative discharge. Prior to installation, detailed construction plans and specifications shall be submitted to the city for review and approval. The owner shall design, construct, operate and maintain the sampling station. The sampling station shall be maintained by the owner so as to be safe and accessible at all times. The frequency of sampling and testing of the wastewater shall be determined by the city. If a relationship can be established between production and wastewater discharge quantity or quality, or both, the city may allow this information to be submitted in lieu of the sampling station information.

5. The owner shall design, construct, operate and maintain the sampling station at the owner's expense. The owner shall record, sample, test and analyze the wastewater at the owner's expense and report the results monthly to the city. If requested by the industry, the city will test and analyze the wastewater at the owner's expense. The cost thereof shall be based on the current prevailing hourly wage rate and established charges and shall include the additional amount of ten percent of such costs to cover costs of administration.

6. The city may request a split sample from the industry. A split sample shall not relieve the industry from its required testing and analysis.

7. The special control manhole and required equipment shall be installed and in operation within twelve months from the effective date of the ordinance codified in this chapter, or in the case of a new facility, prior to the initial discharge of wastewater from the facility. This time limit may be extended by the city if the city determines that installation would be facilitated thereby or if the installation cannot be made due to acts of God, strikes, delays due to contractors, suppliers or subcontractors or other circumstances or conditions beyond the control of the industry. If the industrial wastewater discharge of an industry increases so as to bring it under the requirements of this subsection, the sampling station shall be installed within twelve months from the date that such increased discharge was predicted or was predictable, but no later than twelve months from the date of the actual increased discharge.

J. All measurements, tests, and analyses of the characteristics of pollutants, substances, or wastewater to which reference is made in this section shall be determined in accordance with 40 CFR part 136, or such other methods as the EPA administrator may approve. The control manhole or sampling station shall be deemed to be the most representative location in the wastewater flow system of the premises. (Ord. 5418 §2, 1994; Ord. 4173 §3 [part], 1981).

15.08.080 Damage to system or plant. No person shall maliciously, willfully, or negligently break, damage, destroy, uncover, deface, or tamper with any structure, appurtenance, or equipment which is a part of the public wastewater collection system or wastewater treatment plant. (Ord. 5418 §2, 1994; Ord. 4173 §3 [part], 1981)).

15.08.090 Powers and authority of Plumbing Supervisor and Utilities Administrator. A. The plumbing supervisor and utilities administrator and other duly authorized employees of the city bearing proper credentials and identification shall be permitted to enter all properties for the purposes of inspection, observation, measurement, sampling, and testing in accordance with the provisions of this title. The plumbing supervisor and utilities administrator shall have no authority to inquire into any industrial or commercial processes, including metallurgical, chemical, oil, refining, ceramic, paper, or other similar processes, beyond that information having a direct bearing as determined by the plumbing supervisor and utilities administrator, on the kind and source of discharge to the sanitary sewers or wastewater treatment facilities. All such information so obtained shall be maintained as confidential information, to the extent permitted by law, except as otherwise authorized by the industry involved, to the extent permitted by Law.

B. While performing the necessary work on private properties referred to in subsection A of this section, the plumbing supervisor and utilities administrator or duly authorized employees of the city shall observe all safety rules applicable to the premises established by the company. The company shall provide any required special safety equipment for the temporary use and protection of city inspectors during inspections. The company shall be held harmless for injury or death to the city employees and against liability claims and demands for personal injury or property damage asserted against the company and growing out of the gauging and sampling operation, except as such may be caused by negligence or other fault of the company or the failure of the company to maintain a safe place as required by law.

C. For purposes of enforcing this title, the plumbing supervisor and utilities administrator and other duly authorized employees of the city bearing proper credentials and identification shall be permitted to enter all private properties for the purposes such as, but not limited to, inspection, observation, measurement, sampling, repair, and maintenance of any portion of the wastewater collection system. All entry and subsequent work, if any, shall be done in full accord with the terms of this title. (Ord. 5418 §2, 1994; Ord. 4519 §2, 1984; Ord. 4173 §3 [part], 1981).

15.08.100 Penalty. Any person who violates any provision of this chapter shall, upon conviction, forfeit not less than $50 nor more than $1,000 for each such offense. Each day, or part thereof, during which any such violation continues shall be deemed to constitute a separate offense. (Ord. 5418 §2, 1994; Ord. 4173 §3 [part], 1981).

Chapter 15.12

INDUSTRIAL PRETREATMENT

Sections:

15.12.010 General.
15.12.020 Pretreatment standards.
15.12.030 Charges to industry.
15.12.040 Accidental discharges.
15.12.050 Bypass.
15.12.060 Notice of intent.
15.12.070 Wastewater discharge permits.
15.12.080 Permit application and issuance.
15.12.090 Permit modifications.
15.12.100 Permit conditions.
15.12.110 Reporting requirements.
15.12.120 Entry of premises.
15.12.130 Confidentiality.
15.12.140 Enforcement.
15.12.150 Penalty.

15.12.010 General. The objectives of this chapter are: A. To prevent the introduction of pollutants into the city's wastewater system that could interfere with the operation of the system or contaminate the resulting sludge;

B. To prevent the introduction of pollutants into the city's wastewater system that could pass through the system, inadequately treated, into receiving waters or the atmosphere or otherwise be incompatible with the system;

C. To improve the opportunity to recycle and reclaim wastewater and sludge from the system; and

D. To provide for equitable distribution of the costs of the city's wastewater system.

This chapter provides for the regulation of direct and indirect contributors to the city wastewater system through the issuance of permits to certain non-domestic users, and through enforcement of general requirements for the other users, authorizes monitoring and enforcement activities, requires user reporting, assumes that existing customers' capacity will not be preempted, and provides for the setting of fees for the equitable distribution of costs resulting from the program established herein. (Ord. 5418 §3, 1994; Ord. 4519 §3, 1985).

15.12.020 Pretreatment standards. A. The pretreatment standards issued under section 307(b) of the act and 40 CFR 403 are adopted and incorporated herein and made a part hereof by reference as if fully set forth herein. Any federal, state, or local pretreatment standard is enforceable through this chapter. The city reserves the right to revise this chapter as needed to meet the objectives of the federal pretreatment program.

B. Local limits are required for each POTW to control industrial discharges of cadmium, chromium, copper, nickel, zinc, cyanide, mercury, lead, silver, oil and grease, and pH. The following limits are herein established:

Parameter	Limits (mg/l)
Cadmium	1.3
Chromium	18.0
Copper	2.5
Nickel	10.5
Zinc	4.7
Cyanide	2.0
Mercury	0.008

Lead	1.0
Silver	14.0
Oil & grease	100.0
pH	6-10.5 pH units

Limits for these parameters, with the exception of oil and grease, and pH, may also be expressed in lbs/day. These limits are based on the total city wide allocation to industries. The total lbs/day from all industries may not exceed the following:

Parameter	Limits (lbs/day)
Cadmium	0.308
Chromium	36.9
Copper	3.34
Nickel	21.88
Zinc	9.46
Cyanide	4.29
Mercury	0.007
Lead	0.80
Silver	0.296

C. No discharger shall increase the use of process water, or in any way attempt to dilute a discharge, as a partial or complete substitute for adequate treatment to achieve compliance with a discharge limitation unless expressly authorized by an applicable pretreatment standard or requirement. The city may impose mass limitations on industrial users which are suspected of using dilution to meet applicable pretreatment standards or requirements, or in other cases when the imposition of mass limitations is appropriate.

D. Whenever a conflict exists between any of the standards, requirements or limitations established by federal regulations, state regulations or regulations of the City, the most stringent of those regulations shall be met by all dischargers.

E. In addition to the general prohibited discharge standards established in section 15.08.070 of this chapter, no person shall discharge or cause to be discharged or deposited any wastewaters or effluent which do not conform to the pretreatment standards established by the EPA or the DNR. Pretreatment limits shall minimally include applicable national categorical pretreatment standards for new and existing sources set out in 40 CFR, subchapter N, parts 401 through 471 inclusive. No wastewater, or effluent including domestic, commercial and industrial waste, shall contain any substance which is in violation of any state, federal, or local pretreatment or other discharge standard.

1. Compliance by existing sources with categorical pretreatment standards shall be within three (3) years of the date the standard is effective unless a shorter compliance time is otherwise specified. Existing sources which become industrial users subsequent to promulgation of an applicable categorical pretreatment standard shall be considered existing industrial users.

New sources shall install and have in operating condition, and shall "startup" all pollution control equipment required to meet applicable pretreatment standards before beginning to discharge. Within the shortest feasible time (not to exceed 90 days), new sources must meet all applicable pretreatment standards.

2. When the limits in a categorical pretreatment standard are expressed only in terms of mass of pollutant per unit of production, the POTW may convert the limits to equivalent limits expressed either as mass of pollutant discharged per day or effluent concentration.

The city shall calculate equivalent mass-per-day limitations by multiplying the limits in the standard by the industrial user's average rate of production. This average rate of production shall be based upon a reasonable measure of the industrial user's actual long-term daily production, such as the average daily production during a representative year. New sources shall use projected production in place of actual production.

The city shall calculate equivalent concentration limits by dividing the mass limitations in the standard by average daily flow rate of the industrial user's regulated process wastewater. This average daily flow rate shall be based upon a reasonable measure of the industrial user's actual long-term average flow rate, such as the average daily flow rate during the representative year.

The same production of flow figure shall be used in calculating maximum daily discharge limitations and maximum monthly average, or 4-day average, limitations.

Any industrial user operating under a control mechanism incorporating equivalent mass or concentration limits shall notify the city within two (2) business days after the user has a reasonable basis to know that the production level will significantly change.

F. Variance: Upon request of a user, the city may approve a variance only of the oil and grease, and pH limits set forth in this chapter of the ordinance. The user must demonstrate that a thorough examination of

available waste treatment technologies has been undertaken and that the cost of achieving compliance with a standard or standards is prohibitive. In addition a variance shall only be allowed after the city has established that such variance will not adversely impact wastewater treatment operations, sludge disposal, collection system operations, or result in a discharge in excess of limits established for the city in its WPDES permit. If the user violates any of these criteria, the city has the authority to revoke any variance previously granted and recover, from the user, any costs incurred. Also, if the user is subject to federal categorical limits, the variance granted shall be no less stringent that the limit or limits established by the EPA for said categorical user. Furthermore, the length of the variance will be specified in a wastewater discharge permit issued to the user by the city and reviewed upon reapplication and expiration of said permit. (Ord. 5418 §3, 1994; Ord. 4519 §3, 1985).

15.12.030 Charges to industry. For industrial users discharging to the POTW, the city shall charge for costs of operating the industrial pretreatment program. Fees will be charged to each industry to cover the actual cost of sampling and testing industrial wastewater to assure compliance with this chapter plus the costs incurred by the city in administering the program. (Ord. 5418 §3, 1994; Ord. 4519 §3, 1985).

15.12.040 Accidental discharges. A. Each industrial discharger shall provide protection from the accidental discharge of prohibited or regulated materials or substances established by this ordinance, including, but not limited to, slug discharges. Where necessary, facilities to prevent the accidental discharge of prohibited materials shall be provided and maintained at the discharger's expense. Users shall notify the utilities administrator, 8:00 a.m. to 5:00 p.m. (Monday through Friday, except holidays) or the wastewater treatment plant during non-office hours, immediately upon the occurrence of an accidental discharge of substances prohibited by this chapter, process operational upsets, and periods of noncompliance. The notification shall include location of any discharge, date and time thereof, type of waste, concentration and volume, and corrective actions taken.

B. Within 5 days following an accidental discharge, the discharger shall submit to the city a detailed written report describing the cause of the discharge and measures taken by the user to prevent similar future occurrences. Such report shall be signed by an authorized representative of the discharger.

C. Such written notification shall not relieve the user of any expense, loss, or other liability that may be incurred as a result of damage to the sewerage system, nor shall such notification relieve the User of any fines, civil penalties or other liabilities that may be imposed by this ordinance or other applicable law. Furthermore, such notification does not relieve the user of other reporting requirements that may arise under local, state, or federal laws.

D. Signs shall be permanently posted in conspicuous places on discharger's premises advising employees whom to call in the event of a slug load or accidental discharge. Employers shall instruct employees who may cause or discover such a discharge with respect to an emergency notification procedure.

E. At least once every two (2) years, the city shall evaluate whether each significant industrial user needs a plan to control accidental or slug discharges. The city may require any user to develop, submit for approval, and implement such a plan. Alternatively, the city may develop such a plan for any user. A plan to control accidental or slug discharges shall contain the following information:

1. A description of discharge practices, including nonroutine batch discharges;
2. A description of stored chemicals;
3. Procedures for immediately notifying the City of any accidental or slug discharge, as required by section 15.12.040 of this ordinance; and
4. Procedures to prevent adverse impact from any accidental or slug discharge. Such procedures may include, but are not limited to, inspection and maintenance of storage areas, handling and transfer of materials, loading and unloading operations, control of plant site runoff, worker training, building of containment structures or equipment, measures for containing toxic organic pollutants, including solvents, and measures and equipment for emergency response. (Ord. 5418 §3, 1994; Ord. 4519 §3, 1985).

15.12.050 Bypass. A. Bypass not violating applicable pretreatment standards or requirements. An industrial user may allow any bypass to occur which does not violate pretreatment standards or requirements, but only if it also is for essential maintenance to assure efficient operation. These bypasses are not subject to subsections B and C.

B. Notice.

1. If an industrial user knows in advance of the need for a bypass, it shall submit prior notice to the city, if possible, at least ten days before the date of the bypass.

2. An industrial user shall orally notify the city of an unanticipated bypass that exceeds applicable pretreatment standards or requirements within 24 hours of becoming aware of the bypass. A written submission shall also be provided within five (5) days of the time the Industrial User becomes aware of the bypass. The written submission shall contain a description of the bypass and its cause; the duration of the

bypass, including exact times and dates, and, if the bypass has not been corrected, the anticipated time it is expected to continue; and steps taken or planned to reduce, eliminate, and prevent recurrence of the bypass.

C. Prohibition of bypass.

1. Bypass is prohibited and the city may take enforcement action against an industrial user for a bypass, unless:

a. Bypass was unavoidable to prevent loss of life, personal injury or severe property damage;

b. There were no feasible alternatives to bypass, such as use of auxiliary treatment facilities, retention of untreated wastes or maintenance during normal periods of equipment downtime. This condition is not satisfied if adequate back-up equipment should have been installed in the exercise of reasonable engineering judgment to prevent bypass which occurred during normal periods of equipment downtime or preventative maintenance;

c. The industrial user submitted notices as required by subsection B of this section.

2. The city may approve an anticipated bypass, after considering its adverse effects, if the city determines that it will meet the 3 conditions listed in subsection C. 1. (Ord. 5418 §3, 1994).

15.12.060 Notice of Intent. A. All dischargers of industrial wastewater as specified herein shall file a written notice of intent to the city at least 90 days prior to commencing discharge into the wastewater treatment system.

B. The notice of intent shall be submitted in writing to the city and shall contain such information as required to allow the city to evaluate the effect of the proposed discharge on its facilities and operations and to assure compliance with this chapter. The notice of intent shall be signed by an authorized representative of the user and the user must receive written approval from the city prior to commencing discharge. The city may deny or condition new or increased levels of pollutants, or changes in the nature of the pollutants to the POTW by industrial users where such levels do not meet applicable pretreatment standards or where such contributions would cause the POTW to violate its WPDES permit.

C. The following users shall submit a notice of intent under this section:

1. Dischargers purchasing an existing facility from which a regulated discharge into the city sewerage system is proposed.

2. Dischargers constructing a new facility from which a regulated discharge into the city sewerage system is proposed.

3. Currently non-regulated dischargers proposing to discharge a regulated discharge.

4. Dischargers planning to alter or change the activity at their facility in a manner that would significantly increase or decrease the volume or alter the content of any existing source of industrial wastewater discharge into the authority sewerage system. Significant increase or decrease shall be defined as a 50 percent increase or decrease in the volume of industrial wastewater discharged by a user currently discharging 100,000 gallons per day or less. For dischargers currently discharging industrial wastewater in excess of 100,000 gallons, a 30 percent increase or decrease in volume is significant. (Ord. 5418 §3, 1994; Ord. 4519 §3, 1985).

15.12.070 Wastewater discharge permits. All industrial dischargers that are regulated by federal pretreatment requirements or in the opinion of the city may have a substantial impact on the POTW treatment processes shall obtain a wastewater discharge permit. New industries shall obtain the permit prior to connection to the POTW. Existing industries shall obtain a permit within 90 days after the effective date of this chapter. A non-regulated industry shall obtain a permit within 6 months of the promulgation of federal or local standards with which they must comply. The city will act on permit applications within 30 days upon receipt of acceptable information. (Ord. 5418 §3, 1994; Ord. 4519 §3, 1985).

15.12.080 Permit application and issuance. A. Existing industrial dischargers shall complete and file with the city a permit application in the form prescribed. The permit application shall be submitted to the city no later than 60 days after the effective date of this chapter.

B. Proposed new industrial dischargers shall apply at least 90 days prior to connecting to the POTW. Such application will be on the wastewater discharge permit application/notice of intent form provided by the city. These applications shall be sent to WWTP, 1000 Ferry Street, Eau Claire, WI 54703.

C. Industrial dischargers not covered by section 15.12.070 may, in lieu of the permit application, submit an industrial user survey and Wisconsin DNR NR. 101 report form (if available).

D. No discharge permit shall be issued unless and until the discharger provides the following information:

1. The name, address and location of the discharger.

2. The standard industrial classification (SIC) number according to the standard industrial classification manual, bureau of the budget, 1972, as amended.

3. The wastewater constituents and characteristics of the discharger, including, but not limited to, those mentioned in this chapter as determined by chemical and biological analyses. Sampling and analyses shall be performed in accordance with procedures established by the EPA and contained in 40 CFR Part 136, as amended.

4. The time and duration of discharge.

5. The average daily wastewater flow rates, in gallons per day, including daily, monthly, and seasonal variations, if any. All flows shall be measured unless other verifiable techniques are approved by the utilities administrator due to cost or nonfeasibility.

6. The site plans, floor plans and details to show sewer connections, inspection manholes, sampling chambers, and appurtenances by size, location and elevation.

7. Description of activities, facilities, and plant processes on the premises including all materials (including chemicals used, catalysts, intermediates, and by-products produced, used, or stored on the premises) that are or may be discharged to the sewers.

8. The nature and concentration of any pollutants or materials prohibited by this chapter in the discharge, together with a statement regarding whether or not compliance is being achieved with this chapter on a consistent basis (where limitations have been set) and if not, whether additional operation and maintenance activities and/or additional pretreatment is required for the discharger to comply with this chapter. Dischargers not in compliance with this chapter shall take the following action:

a. Submit a schedule containing milestone dates for the commencement and completion of major events leading to the construction and operation of additional pretreatment required for the discharger to comply with the requirements of this chapter including, but not limited to, dates relating to hiring an engineer, hiring other appropriate personnel, completing preliminary plans, completing final plans, completing construction, and all other acts necessary to achieve compliance with this chapter.

b. Submit plans, specifications and other pertinent information related to pretreatment facilities to the City and DNR for review and approval prior to the start of construction.

c. Not later than 14 days following each milestone date in the schedule and the final date for compliance, the discharger shall submit a progress report to the city, including no less than a statement as to whether or not it complied with the increment of progress, the reason for any delay, and if appropriate the steps being taken by the discharger to return the construction to the approved schedule. In no event shall more than 9 months elapse between the milestone dates and the corresponding progress reports.

d. Upon completion of pretreatment facilities and commencing with normal operating activities, a discharger shall file with the city a 90 day final compliance report containing discharge data described in sec. 15.12.110(B).

9. Each product produced by type, amount, process or processes, and the rate of production.

10. The type and amount of raw material utilized (averaged and maximum per day).

11. Other information which may be necessary to evaluate the permit application.

12. Number of employees, hours of operation.

13. A list of other environmental control permits.

E. All permit applications for new or modified permits shall be signed by a person who meets the signatory requirements as defined in sec. 15.04.020, no. 36.

F. The city shall evaluate the complete application and data furnished by the discharger and may require additional information. Within 30 days after full evaluation and acceptance of the data furnished, the city shall issue a wastewater discharge permit subject to terms and conditions provided herein.

G. Existing dischargers subject to local discharge limitations shall comply with such limits within 18 months after the effective date of this chapter.

H. If a discharger wishes to appeal or challenge the pretreatment requirements, effluent limitations or conditions imposed by the issued wastewater discharge permit, a petition shall be filed for appeal with the city within 10 days from the issuance date of the permit as provided in sec. 15.12.130 G. of this chapter. (Ord. 5418 §3, 1994; Ord. 4519 §3, 1985).

15.12.090 Permit modifications. A. The city reserves the right to amend any wastewater discharge permit issued hereunder in order to assure compliance by the city with applicable laws and regulations. Within 9 months of the promulgation of an applicable pretreatment standard, the wastewater discharge permit of each discharger subject to such standard shall be revised to require compliance with such standard within the time frame prescribed by such standard.

B. All national categorical pretreatment standards effective before or after the promulgation of this chapter are or shall be adopted by reference by the city as part of this chapter. Where a discharger, subject to an applicable pretreatment standard has not previously submitted an application for a wastewater discharge permit, the discharger shall apply for a wastewater discharge permit from the city within 90 days after the promulgation of an applicable national categorical pretreatment standard. The discharger shall be informed of any proposed changes in the permit at least 30 days prior to the effective date of change. Any changes or new conditions in the permit shall include a reasonable time schedule for compliance.

C. When it can be demonstrated that circumstances exist that would create an unreasonable burden on the industry to comply with the time schedule imposed by section 302 of the act, a request for extension of time may be presented to the city for consideration. (Ord. 5418 §3, 1994; Ord. 4519 §3, 1985).

15.12.100 Permit conditions. Wastewater discharge permits shall specify no less than the following:

A. Limits on the average and maximum wastewater constituents and characteristics regulated thereby.

B. Limits on the average and maximum rate and time of discharge and/or requirements for flow regulation and equalization.

C. Requirements for installation and maintenance of inspection and sampling facilities.

D. Industries discharging less than 10,000 gallons per day of wastewater and subject to federal categorical pretreatment standards shall install a suitable sampling manhole as described in section 15.08.070 H. of this title.

E. Specifications for monitoring programs - the city may, under particular circumstances, reasonably require special conditions of a given discharger including but not limited to sampling locations, frequency of sampling, number, types and standards for tests and reporting schedule.

F. Compliance schedules.

G. Requirements for submittal of special technical reports or discharge reports in addition to those specifically prescribed by this chapter.

H. Requirements for the prompt reporting of changed or new discharges.

I. All wastewater discharge permits shall be issued for nor more than 5 years, subject to amendment or revocation as provided in this chapter. A renewal application form will be supplied by the city.

J. Wastewater discharge permits are issued to a specific discharger for a specific operation and are not assignable to another discharger or transferable to any other location without the prior written approval of the city.

K. Other conditions to ensure compliance with this ordinance.

L. Applicable civil and criminal penalties for violations of pretreatment standards and requirements will apply. (Ord. 5418 §3, 1994; Ord. 4519 §3, 1985).

15.12.110 Reporting requirements. A. Baseline monitoring report (BMR). For categorical users only. Within 180 days after the effective date of a categorical pretreatment standard, or 180 days after the final administrative decision made upon a category determination submittal under 40 CFR 403.6(a)(4), whichever is later, existing industrial dischargers subject to such categorical pretreatment standards and currently discharging to or scheduled to discharge to the POTW shall be required to submit to the city a report containing the following information:

1. Identifying information. The name and address of the facility, including the name of the operator and owners.

2. Permits. A list of any environmental control permits held by or for the facility.

3. Description of operations. A brief description of the nature, average rate of production and standard industrial classification of the operation or operations carried out by the industrial user. This description should include a schematic process diagram indicating points of discharge to the POTW from the regulated processes.

4. Flow measurement. Information showing the measured average daily and maximum daily flow, in gallons per day, to the POTW from regulated process streams and other streams, as necessary, to allow use of the combined wastestream formula of 40 CFR 403.6(e).

5. Measurement of pollutants. The user shall identify the categorical pretreatment standards applicable to each regulated process and shall:

a. Submit the results of sampling and analysis identifying the nature and concentration of regulated pollutants in the discharge from each regulated process. Both daily maximum and average concentrations shall be reported. The sample shall be representative of daily operations.

b. A minimum of four (4) grab samples shall be used for pH, cyanide, total phenols, oil and grease, sulfide, and volatile organics. For all other pollutants, 24-hour composite samples must be obtained through flow-proportional composite sampling techniques where feasible. The city may waive flow-proportional composite sampling for any Industrial User who demonstrates that flow-proportional sampling is infeasible. In such cases samples may be obtained through time-proportional composite sampling techniques or through a minimum of four (4) grab samples where the user demonstrates that this will provide a representative sample of the effluent being discharged.

c. The User shall take a minimum of one representative sample to compile that data necessary to comply with the requirements of this paragraph.

d. Samples shall be taken immediately downstream from pretreatment facilities if such exist or immediately downstream from the regulated process if no pretreatment exists. If other

wastewaters are mixed with the regulated wastewater prior to pretreatment the user shall measure the flows and concentrations necessary to allow use of the combined wastestream formula of 40 CFR 403.6(e) in order to evaluate compliance with the pretreatment standards. Where an alternate concentration or mass limit has been calculated in accordance with 40 CFR 403.6(e), this adjusted limit along with supporting data shall be submitted to the POTW.

6. Certification. A statement, reviewed by an authorized representative of the industrial user, and certified by a qualified professional, indicating whether categorical pretreatment standards are being met on a consistent basis and, if not, whether additional operation and maintenance and/or additional pretreatment is required for the industrial user to meet the categorical pretreatment standards and requirements. A baseline report previously submitted to the DNR under 40 CFR 403.12 may be submitted in lieu of the report required under this subsection and shall constitute compliance of this subsection.

B. Final compliance date report (FCR). Within 90 days following the date for final compliance of the discharger with applicable categorical pretreatment standards set forth in this chapter or 90 days following discharge from a new source, any discharger subject to categorical standards shall submit to the city a report indicating the nature and concentration of all prohibited or regulated substances contained in its discharge, and the average and maximum daily flow in gallons. The report shall state whether the applicable pretreatment standards or requirements are being met on a consistent basis and, if not, what additional operation and maintenance and/or pretreatment is necessary to bring the discharger into compliance with the applicable pretreatment standards or requirements. Where equivalent mass or concentration limits are established by the POTW for a discharger, this report shall contain a reasonable measure of the discharger's long-term production rate. Where a user is subject to categorical pretreatment standards expressed in terms of allowable pollutant discharge per unit of production, the report shall include the discharger's actual production during the appropriate sampling period.

C. Periodic compliance reports (PCR). For any discharger subject to an applicable pretreatment standard. After the compliance date of such pretreatment standard, or, in the case of a new source, after commencement of the discharge to the city sanitary system, the discharger shall submit to the city no later than July 15 for the period January 1-June 30, and no later that January 15 for the period July 1-December 31, unless required more frequently by the city, a report indicating the nature and concentration of prohibited or regulated substances in the effluent that are limited by the Pretreatment Standards herein. In addition, this report shall include a record of all measured or estimated average and maximum daily flows during the reporting period required herein. Flows shall be reported on the basis of actual measurement, except, where cost or feasibility considerations justify, the city may accept reports of average and maximum flows estimated by verifiable techniques. The city may authorize the submittal of said reports on months other than those specified above.

1. Periodic compliance reports shall be based on sampling and analysis performed in the period covered by the report and performed in accordance with the techniques described in 40 CFR part 136 and amendments thereto. Where 40 CFR part 136 does not contain sampling or analytical techniques for the pollutant in question or where the city determines that the part 136 sampling and analytical techniques are inappropriate for the pollutant in question, sampling and analysis shall be performed by using validated analytical methods or any other applicable sampling procedures suggested by the city. This sampling and analysis may be performed by the city in lieu of the significant noncategorical industrial users only. Where the city itself collects all the information required for the report, the noncategorical significant industrial user will not be required to submit the report.

2. If sampling performed by an industrial user indicates a violation, the user shall notify the city within 24 hours of becoming aware of the violation. The user shall also repeat the sampling and analysis and submit the results of the repeat analysis to the city within 30 days after becoming aware of the violation. Resampling is not required if:

a. The city performs sampling at the user's premises at least once per month, or

b. The city performs sampling at the user's premises between the time when the user performs its initial sampling and the time when the user receives the results of this sampling.

3. The reports required in subsection C shall be based upon data obtained through appropriate sampling and analysis performed during the period covered by the report, which data is representative of conditions occurring during the reporting period. The city shall require that frequency of monitoring necessary to access and assure compliance by industrial users with applicable pretreatment standards and Requirements.

4. If an industrial user subject to the reporting requirements in subsection C monitors any pollutant more frequently than required by the city, using the procedures prescribed in this section, the results of this monitoring shall be included in the report.

D. All wastewater discharge permit applications and reports listed in this subsection A through C shall be signed by a person who meets the applicable signatory requirements as defined in sec. 15.04.020 37. and include the certification statement:

"I certify under penalty of law that this document and all attachments were prepared under my direction or supervision in accordance with a system designed to assure that qualified personnel properly gather and evaluate the information submitted. Based on my inquiry of the person or persons who manage the system, or those persons directly responsible for gathering the information, the information submitted is to the best of my knowledge and belief, true, accurate, and complete. I am aware that there are significant penalties for submitting false information, including the possibility of fine and imprisonment for knowing violations."

E. All categorical and non-categorical industrial users shall notify the city immediately of all discharges that could cause problems to the POTW, including any slug load by the Industrial User.

F. All industrial users shall promptly notify the city in advance of any substantial change in the volume or character of pollutants in their discharges.

G. The industrial user shall provide written notification to the city, the EPA region V waste management division director, and DNR bureau of solid and hazardous waste management of any discharge into the POTW of a substance which, if otherwise, disposed of, would be a hazardous waste under 40 CFR part 261.

H. All industrial users subject to the reporting requirements of this ordinance shall retain records of all monitoring information, including all calibration and maintenance records, and all original strip chart recordings for continuous monitoring information, copies of all required reports, and records of all data used to complete the permit application. Records shall be retained for a period of at least 3 years from the date of the sampling, analysis, report or application. The retention period may be extended 1) at the request of the city or 2) when the records pertain to matters that are the subject of enforcement or litigation activities involving the industrial user or the city. Records shall be preserved and retained until all enforcement activities have concluded and all periods of limitation with respect to any appeals have expired. (Ord. 5418 §3, 1994; Ord. 4519 §3, 1985).

15.12.120 Entry of premises. The utilities administrator, DNR, EPA, or other duly authorized employees bearing proper credentials and identification shall be permitted to enter premises either scheduled or unscheduled for the purpose of:

A. Inspection of premises.

B. Copying any records required to be kept under the provisions of this ordinance.

C. Inspecting any monitoring equipment or method, any pretreatment facilities, or facilities creating process discharges.

D. Sampling any discharge of wastewater to the wastewater treatment system. (Ord. 5418 §3, 1994).

15.12.130 Confidentiality. Information and data on a user obtained from reports, surveys, wastewater discharge permit applications, wastewater discharge permits, and monitoring programs, and from the city's inspection and sampling activities, shall be available to the public without restriction, unless the user specifically requests, and is able to demonstrate to the satisfaction of the city, that the release of such information would divulge information, processes, or methods of production entitled to protection as trade secrets under applicable state law. Any such request must be asserted at the time of submission of the information or data. When requested and demonstrated by the user furnishing a report that such information should be held confidential, the portions of a report which might disclose trade secrets shall not be made available for inspection by the public, but shall be made available immediately upon request to governmental agencies for uses related to the WPDES program or pretreatment program, and in enforcement proceedings involving the person furnishing the report. Wastewater constituents and characteristics and other "effluent data" as defined by 40 CFR 2.302 will not be recognized as confidential information and will be available to the public without restriction. (Ord. 5418 §3, 1994).

15.12.140 Enforcement procedures. The utilities administrator or designee is authorized to enforce the requirements of this chapter. The city shall provide a suitable enforcement response to noncompliance with or violation of any provisions of this chapter.

In determining the level of enforcement response to user noncompliance or violation, the city may consider the historical compliance of the user with permit requirements; adherence to previously established compliance schedules; the impacts of the noncompliance on the public health and welfare, environment, wastewater treatment system, city employees, wastewater treatment effluent or sludge; the frequency and degree of exceedance of discharge limits or permit requirements; cooperation of the discharger in determining compliance status; previous enforcement actions taken; and good faith efforts of the discharger to attain compliance.

In addition to other enforcement mechanisms permitted by law, the city may proceed under any or all of the enforcement responses that follow:

A. Informal notice (IN) - Informal notice shall be achieved through a telephone call, inspection visit, informal meeting, or letter. Using any of these methods, an authorized representative of the city may discuss with the user the noncompliance and its timely correction.

B. Notice of violation (NOV) - A notice of violation may be issued by the utilities administrator or an authorized representative of the City for noncompliance based on the criteria contained in this chapter, and the user's discharge permit. The NOV will state the specific nature of the violation and the applicable permit or ordinance section(s) violated. The NOV will require a response from the user within 30 days to establish the reasons for the noncompliance and to provide a written plan for the satisfactory and expeditious correction of the noncompliance.

C. Compliance order (CO) - The city may issue an administrative order based on the criteria contained in this chapter, and the user's discharge permit. Such CO may contain requirements and deadlines for specific action by the user, compliance schedules or prohibit certain actions or discharges by the user. A CO shall not require termination of sewer or water service, but may require elimination of a specific noncomplying discharge.

D. Show cause hearing (SCH) - Where a violation of this chapter is not corrected by timely compliance by means of previous enforcement procedures, the city may order any user which causes or allows such violation to show cause why the wastewater service to the user should not be terminated. A written notice shall be served on the user by personal service or certified or registered mail, return receipt requested, specifying the time and place of a hearing to be held by the city regarding the violation, the reasons why the enforcement action is to be taken, the proposed enforcement action, and directing the User to show cause before the city council why the proposed enforcement actions should not be taken. The notice of the hearing shall be served no less than 7 days before the hearing. Service may be made on any agent, officer, or authorized representative of a user. The proceedings at the hearing shall be considered by the city council which shall then enter appropriate orders with respect to the alleged improper activities of the User. Appeal of such orders may be taken by the discharger in accordance with state law.

E. Revocation of permit. The city may seek to terminate wastewater treatment services to any discharger which:

1. Fails to factually report the wastewater constituents and characteristics of its discharge;
2. Fails to report significant changes in wastewater constituents or characteristics;
3. Refuses reasonable access to the discharger's premises by representatives of the city for the purpose of inspection or monitoring; or
4. Violates the conditions of this section, or any final judicial order entered with respect thereto.

Noncompliant industrial users will be notified of the proposed termination of their wastewater permit and be offered an opportunity to show cause under subsection D of this section why the proposed action should not be taken.

F. Judicial proceedings. Following the entry of any order by the city with respect to the conduct of a user contrary to the provisions of this chapter, the city may commence an action for appropriate legal and/or equitable relief in an appropriate court of record. The city may seek, to the extent permitted by Law, injunctive relief when potential harm to the POTW, public health to the extent permitted by Law, or welfare, or the environment requires an injunction to assure a prompt and appropriate action by a discharger.

G. Right of appeal. Any user or any interested party may have the right to request in writing an interpretation or ruling by the city on any matter covered by this chapter and shall be entitled to a prompt written reply. In the event that such inquiry is by a user and deals with matters of performance or compliance with this chapter for which enforcement activity relating to an alleged violation is the subject, receipt of a user's request shall stay all enforcement proceedings pending receipt of the aforesaid written reply.

H. Emergency suspension of service. The city may for good cause shown, suspend the wastewater treatment service of a user when it appears to the city that an actual or threatened discharge presents or threatens an imminent or substantial danger to the health or welfare of persons, substantial danger to the environment, interfere with the operation of the POTW, or violate any pretreatment limits imposed by this chapter. Any user notified of the suspension of the city's wastewater treatment service shall, within a reasonable period of time, as determined by the city, cease all discharges. In the event of failure of the user to comply voluntarily with the suspension order within the specified time, the city shall commence judicial proceedings immediately thereafter to compel the user's compliance with such order. The city shall reinstate the wastewater treatment service and terminate judicial proceedings upon submission of adequate, satisfactory proof by the user of the elimination of the non-complying discharge or conditions creating the threat of imminent or substantial danger as set forth above. (Ord. 5418 §3, 1994; Ord. 4519 §3, 1985).

15.12.150 Penalties. A. Any person who violates any provision of this chapter shall, upon conviction, forfeit not less than $1,000.00 for each offense. Each day, or part thereof, during which any violation continues shall be deemed to constitute a separate offense.

B. Any person or industry which fails to comply with the provisions of this chapter may, in addition to the forfeiture listed under subsection A., be subject to disconnection from the wastewater treatment system following notice and a reasonable opportunity to be heard.

C. Any user violating any of the provisions of this chapter, or who discharges or causes a discharge producing a deposit or obstruction, or causes damages to or impairs the city's wastewater treatment system may be liable to the city for any expense, loss, or damage caused by such violation or discharge. The city may bill the user for the costs incurred for any cleaning, repair, or replacement work caused by the violation or discharge. Refusal to pay the assessed costs shall constitute a violation of this chapter enforceable under the provisions of subsection A.

D. Any person who knowingly makes any false statement, representation or certification in any application, record, report, plan or other document filed or required to be maintained pursuant to this ordinance, or who falsifies, tampers with, or knowingly renders inaccurate any monitoring device or method required under this chapter shall, upon conviction, forfeit not less than $1,000 per day per violation.

E. Enforcement actions--annual publication. A list of all significant Industrial Users which were in significant noncompliance or which were the subject of enforcement proceedings under this chapter during the 12 previous months shall be annually published by the city in the official city newspaper. Such publication shall summarize the enforcement actions taken against the users during such period. (Ord. 5418 §3, 1994; Ord. 4519 §3, 1985).

Title 16

BUILDING AND CONSTRUCTION

Chapters:

16.04 Building Code
16.08 Housing Code
16.12 Mobile Home Code
16.16 On-Premise Signs
16.18 Poster Panel Signs
16.24 Electrical Code
16.26 Outdoor Lighting
16.28 Heating Code
16.32 Fire Prevention Code
16.36 Standards for Public and Private Development
16.38 Airport Building and Construction Standards

Chapter 16.04

BUILDING CODE

Sections:

I. GENERAL PROVISIONS

16.04.010 Uniform dwelling code.
16.04.020 Short title.
16.04.030 Purpose.
16.04.040 Scope.
16.04.050 Definitions.
16.04.060 Highest standards prevail.

II. ADMINISTRATION

16.04.070 Building inspector--Qualifications--Duties.
16.04.080 Permit--Application--Issuance.
16.04.090 Permit--Fees.
16.04.100 Permit--General conditions.
16.04.110 Unsafe buildings--Determination--Abatement.
16.04.120 Alterations and repairs.

16.04.130 Building use changes.
16.04.140 Building maintenance.
16.04.150 Penalty and violations.
16.04.160 Building code committee.

III. CONSTRUCTION--GENERAL

16.04.170 Requirements applying to all buildings.
16.04.180 Construction requirements--Applicability.

IV. RETAINING WALLS

16.04.190 Definitions.
16.04.200 Permit required.
16.04.210 Construction and structural design.
16.04.220 Unsafe retaining walls--Determination/abatement.

V. SWIMMING POOLS

16.04.230 Definitions.
16.04.240 Permit required.
16.04.250 Fencing.
16.04.260 Construction and structural design.
16.04.270 Health department approval.

VI. DEMOLITION OF STRUCTURES

16.04.280 Permit required.
16.04.285 Structures listed on the national or state register of historic places.
16.04.290 Safety provisions.
16.04.300 General requirements.

VII. MOVED STRUCTURES

16.04.310 Permit required.
16.04.320 Compliance.
16.04.330 Safety provisions.

VIII. SPECIAL BUILDING DISTRICT

16.04.340 Special building district--Scope.
16.04.350 Special building district boundaries defined.
16.04.360 Restrictions within the special building district.

I. GENERAL PROVISIONS

16.04.010 Uniform dwelling code. A. Title. This section shall be known as the one-family and two-family dwelling code of the City of Eau Claire.

B. Purpose. The purpose and intent of this section is to:

1. Exercise jurisdiction over the construction and inspection of new one-family and two-family dwellings and additions, alterations and repairs to dwellings coming under the scope of this section.

2. Provide plan review and on-site inspections of one-family and two-family dwellings by inspectors certified by the Wisconsin Department of Commerce;

3. Establish and collect fees to defray administrative and enforcement costs;

4. Establish remedies and penalties for violations; and

5. Establish use of the Wisconsin Uniform Building Permit as prescribed by the Wisconsin Department of Commerce.

C. State Uniform Dwelling Code Adopted. The administrative code provisions describing and defining regulations with respect to one-family and two-family dwellings in Chapters COMM 20 - 25 of the Wisconsin

Administrative Code, whose effective dates are generally June 1, 1980, are adopted and by reference made a part of this chapter as if fully set forth herein. Any act required to be performed or prohibited by an Administrative Code provision incorporated herein by reference is required or prohibited by this chapter. Any future amendments, revisions or modifications of the Administrative Code provisions incorporated herein are intended to be made part of this chapter to secure uniform statewide regulations of one-family and two-family dwellings in this city of the State of Wisconsin. A copy of these Administrative Code provisions and any future amendments shall be kept on file in the office of the Building Inspector.

D. Definitions. In this section, unless otherwise specifically indicated:

1. "Addition" means new construction performed on a dwelling which increases the outside dimensions of the dwelling.

2. "Alteration" means a substantial change or modification other than an addition or minor repair to a dwelling or to systems involved within a dwelling.

3. "Department" means the Department of Commerce.

4. "Dwelling" means any building, the initial construction of which is commenced on or after June 1, 1980, which contains one or two dwelling units.

5. "Repair" means the act or process of restoring to original soundness, including, but not limited to, redecorating, refinishing, nonstructural repairs, maintenance repairs or replacement of existing fixtures, systems or equipment.

6. "One-family or two-family dwelling" means a building structure which contains one or two separate households intended to be used as a home, residence or sleeping place by an individual or by two or more individuals maintaining a common household, to the exclusion of all others.

7. "Person" means an individual, partnership, firm or corporation.

8. "Uniform Dwelling Code" means those Administrative Code provisions, and any future amendments, revisions or modifications thereto, contained in the following chapters of the Wisconsin Administrative Code:

Wis. Adm. Code Chapter COMM 20--Administration and Enforcement;
Wis. Adm. Code Chapter COMM 21--Construction Standards;
Wis. Adm. Code Chapter COMM 22--Energy Conservation Standards;
Wis. Adm. Code Chapter COMM 23--Heating, Ventilating and Air Conditioning Standards;
Wis. Adm. Code Chapter COMM 24--Electrical Standards;
Wis. Adm. Code Chapter COMM 25--Plumbing and Potable Water Standards.

E. Method of Enforcement.

1. The building inspector, established under section 16.04.070, shall administer and enforce the provisions of this section and the Uniform Dwelling Code.

2. The building inspector or his or her designee shall be certified for inspection purposes by the department in each of the categories specified under Sec. COMM 5.63, Wisconsin Administrative Code.

3. The building inspector, subject to approval of the city council, may appoint, as necessary, subordinates to inspect buildings. Such subordinates shall be certified under Ch. COMM 5, Wisconsin Administrative Code, by the department.

4. The building inspector or an authorized certified agent may at all reasonable hours enter upon any public or private premises for inspection purposes and may require the production of the permit for any building, plumbing, electrical or heating work. No person shall interfere with or refuse to permit access to any such premises to the building inspector or his or her agent while in the performance of his or her duties.

5. The building inspector shall perform all administrative tasks required by the department under the Uniform Dwelling Code and shall maintain records in connection therewith as required under section 16.04.070 E.

F. Alterations, repairs, and additions. The following provisions shall apply to one- and two-family dwellings of which initial construction commenced after June 1, 1980:

1. Alterations and Repairs. When not in conflict with any regulations, alterations and repairs to any existing building accommodating a legal occupancy and use but of nonconforming type of construction, which affect the structural strength, fire hazard, exits, required natural lighting, energy conservation, or replacement of major equipment, then such construction shall be made to conform to the minimum requirements of the Uniform Dwelling Code in effect at the time of such alteration or repair.

2. Additions. Additions shall conform to the minimum requirements of the Uniform Dwelling Code in effect at the time of the construction of that addition.

3. Minor Repairs. Repairs for purposes of maintenance, or replacements which do not involve structural portions of the building or structure, or which do not affect room arrangement, light and ventilation, energy conservation, access to or efficiency of any exit stairway or exits, fire protection, or exterior aesthetic appearance, and which do not increase a given occupancy and use, shall be deemed minor repairs not requiring a building permit. Residing, reroofing or replacement of more than 25 percent of a dwelling unit's interior wall and ceiling plaster, gypsum wallboard or similar wall surfaces shall not be deemed minor repair.

4. Alterations and Repairs Required. When any of the structural members of any building have deteriorated from any cause whatsoever to less than their required strength, the owner of such a building or structure shall cause such structural members to be restored to their required strength. Upon failure to comply with the above structural repairs by the owner, the building or structure shall be considered a menace to public safety and shall be vacated and thereafter no further occupancy or use of the same shall be permitted until the regulations of this code are complied with.

G. Building Permits.

1. Building Permits Required. No one-family or two-family dwelling of which initial construction shall be commenced after June 1, 1980, shall be built, enlarged, altered, or repaired unless a building permit for that work shall first be obtained by the owner, or his or her agent, from the building inspector. No building permit is required for work to be performed which is deemed minor repair. Application for a building permit shall be made in writing upon that form, designated as the Wisconsin Uniform Dwelling Permit Application, furnished by the Department of Commerce, or on a form approved for use by the department.

2. Submission of Plans. Building permit application shall include the submittal of two sets of plans containing all the information, data and calculations specified in COMM 20.09(4) and section 16.04.080.

3. Issuance of Permit. If the building inspector finds that the proposed building or repair, alteration, or addition complies with all city ordinances, including 16.04.080 E., and the Uniform Dwelling Code, the inspector shall officially approve the application and a building permit shall be subsequently issued to the applicant. The issued building permit shall be posted in a conspicuous place at the building site. A copy of any issued building permit shall be kept on file with the building inspector. Permit expiration shall be as stated in COMM 20.09(5)(b). All sidewalks, driveways, grading and planting of disturbed areas not otherwise improved shall be complete within a period of 24 months from the date of the commencement of building construction, unless an extension is granted by the building inspector for reasonable cause.

H. Fees for Building Permits and Inspections for One- and Two-Family Dwellings Constructed on or after June 1, 1980. Fees are as stated in the City of Eau Claire Fees and Licenses Schedule.

I. Violation and Penalties.

1. No person shall erect, use, occupy or maintain any one-family or two-family dwelling in violation of any provision of this section or the Uniform Dwelling Code or permit any such violation to be committed. Every day of violation shall constitute a separate offense. Any person violating any of the provisions of this section shall, upon conviction, be subject to a forfeiture of not less than $20 nor more than $500, together with the costs of prosecution and, if in default of payment thereof, shall be imprisoned for a period of not less than one day or more than six months or until such forfeiture and costs are paid.

2. If, after written notification, the violation is not corrected within the specified time, a stop work order may be served on the owner or his or her representative and a copy thereof shall be posted at the construction site. Such stop work order shall not be removed except by written notice of the building inspector after satisfactory evidence has been supplied that the cited violation has been corrected.

3. Each day each violation continues after the specified time period has run shall constitute a separate offense. Nothing in this section shall preclude the issuance of a citation or citations pursuant to Chapter 1.24 or shall preclude the city from maintaining an appropriate action to prevent or remove a violation of any provision of this chapter or the Uniform Dwelling Code.

4. If any construction or work governed by the provisions of this section or the Uniform Dwelling Code is commenced prior to the issuance of a permit, double fees shall be charged.

J. Appeal. Any person feeling aggrieved by an order or a determination of the building inspector may appeal the decision in accordance with S. COMM 20.21.

K. Liability for Damages. This chapter shall not be construed as an assumption of liability by the city for damages because of injuries sustained or property destroyed by any defect in any dwelling or equipment. (Ord. 6363 §36, 2002; Ord. 6239 §1, 2001; Ord. 6164 §1, 2001; Ord. 5584 §1, 1996; Ord. 5399 §4, 1994; Ord. 5332, 1993).

16.04.020 Short title. The remainder of this chapter shall be known as the "Building Code of the City of Eau Claire". (Ord. 5332, 1993).

16.04.030 Purpose. The purpose of this code is to protect the health, safety and welfare of the public by establishing minimum standards for the safe and stable design, construction, structural strength, quality of materials, adequate egress facilities, sanitary facilities, natural lighting, heating and ventilating, energy conservation, and fire safety for all buildings and structures existing in the city of Eau Claire and those hereafter erected, constructed, enlarged, altered, repaired, moved, converted to other uses or demolished, and by regulating the use and occupancy of all buildings and structures. (Ord. 5332, 1993).

16.04.040 Scope. Buildings and/or structures hereafter erected, enlarged, altered, repaired, moved, converted, or demolished in the city shall conform to all the requirements of this code or one of the adopted

codes having jurisdiction over such construction. The provisions of this code shall be deemed to supplement any and all laws of the State of Wisconsin and regulations of the State Administrative Building Code, specifically including, but not limited to Chapters COMM 20-25, 61-65, 66, and 69, prepared by the State of Wisconsin Department of Commerce, Safety and Buildings Division, pertaining to construction and use, and shall in no way conflict with such codes unless specifically mentioned in a section. These state codes are adopted by reference, the content thereof to be administered and enforced in conjunction with this code by the Inspection Services Division, Department of Community Development, City of Eau Claire. (Ord. 6484 §1, 2004; Ord. 6164 §2, 2001; Ord. 5484 §7, 1995; Ord. 5332, 1993).

16.04.050 Definitions. Definitions contained in Title 18 and COMM Chapters 20, 51, and 61 are hereby adopted by reference. Where there is a conflict between codes and ordinances, the following definitions and those found in Title 18 shall apply:

1. **"Approved"** means approved by the building official or other authority having jurisdiction.

2. **"Area" (building)** means the maximum horizontal measurement of a building, including any extensions, and expressed in square feet. Measurements to be taken below grade, at grade or above grade.

3. **"Area" (floor)** means actual area of floors measured from inside faces of interior and exterior walls.

4. **"Areaway"** means an uncovered subsurface space adjacent to a building and primarily intended for the admission of light and air to rooms below grade.

5. **"Beam"** means a primary structural member which supports secondary structural members such as joists and rafters. Its material may be of solid or laminated wood, steel, reinforced concrete or prestressed concrete.

6. **"Beam, grade"** means a reinforced concrete beam supporting the exterior wall construction in contact with the earth but supported by piers.

7. **"Bearing"** means a table formed by vertical framing members and which forms a base for support of floor, ceiling and roof systems.

8. **"Block, lintel"** means a formed hollow masonry unit shaped so as to provide top depressions for the accommodation or reinforcing steel and concrete.

9. **"Brace"** means a temporary or permanent framing member installed for the purpose of resisting horizontal or vertical forces.

10. **"Brace, corner"** means a framing member installed diagonally in wood frame exterior walls to resist racking forces.

11. **"Breeching"** means a duct, normally of heavy gauge metal, which conducts products of combustion from fuel-fired appliances to a chimney or stack.

12. **"Bridging"** means framing members either placed at an angle from top to bottom alternately in joist spaces, or solid two-inch blocks placed full joist depth, and intended for the purpose of transmitting direct floor and roof loads over wider areas.

13. **"Building"** means a structure having a roof supported by columns or walls.

14. **"Building, accessory"** means a subordinate building, the use of which is incidental to that of the main building on the same lot.

15. **"Building, main"** means a building in which is conducted the principal use of the lot on which it is situated (including attached garages).

16. **"Building code committee"** means a committee of five persons appointed by the city manager, and whose principal functions are the consideration of amendments to the building code and the hearing of appeals from aggrieved persons regarding decisions of the building inspector.

17. **"Building, nonconforming"** means an existing building which in some respect does not meet the requirements of this code.

18. **"Building official"** means the officer charged with the administration and enforcement of this code, or a duly authorized representative.

19. **"Building service equipment"** means the mechanical, electrical, plumbing or elevator equipment, including piping, wiring, fixtures and other accessories which provide sanitation, lighting, heating, ventilation, firefighting and transportation facilities essential for the habitable occupancy of the building for its designated use and occupancy.

20. **"Carport"** means a roofed space having at least two sides open to the weather, primarily designed or used for parking and storage of motor vehicles.

21. **"Certificate of occupancy"** means a document issued by the building official, upon application therefor, which states that all of the provisions of this code and of the zoning ordinance have been fully complied with by the owner or contractor.

22. **"Column"** means a vertical, free standing, end load-bearing structural member; a compression member.

23. **"Concrete"** means a mixture of portland cement, fine aggregate, course aggregate and water.

24. **"Concrete, plain"** means concrete that does not conform to the definition for reinforced concrete.

25. **"Concrete, ready mixed"** means concrete mixed in truck transit by a concrete supplier, and ready for placement upon arrival at a building site.

26. **"Concrete, reinforced"** means concrete containing reinforcement and designed on the assumption that the two materials act together in resisting forces.

27. **"Dampproofing"** means a treatment of a surface or structure which retards the passage of water.

28. **"Fire stop"** means a solid, tight closure placed so as to restrict the spread of smoke and fire in concealed spaces.

28a. **"Flange"** means the section of a structural shape, normally a beam, which occurs at each end of the web and at right angles thereto.

29. **"Flashing"** means sheet metal or other water impervious material used in roof and wall construction to protect a building from seepage of water to interior areas.

30. **"Footing"** means that portion of the foundation of a structure which spreads and transmits structure loads directly to the soil or to piles.

31. **"Foundation"** means construction, below or partly below grade, which provides support for exterior walls or other structural parts of the building.

32. **"Frost line"** means the depth below finished grade where frost action on footings or foundations is improbable.

33. **"Furring strip"** means wood strips, usually one inch thickness, fastened to wall, ceiling and floor framing, and which serve as a fastening base for finished surface materials.

34. **"Garage, attached"** means a garage having all or part of one or more walls common to the dwelling or to a covered area attached to the dwelling.

35. **"Garage, detached"** means a garage which is completely surrounded by open space.

36. **"Garage, built-in"** means a garage located within the exterior walls of the dwelling.

37. **"Girder"** means the same as beam.

38. **"Girt"** means a wall member installed at right angles and fastened to vertical wall supporting members for the purpose of anchoring exterior facing thereto.

39. **"Grade, lumber"** means the classification given building framing lumber in accordance with predetermined standards as set forth by Lumber Manufacturers Association in conjunction with NBS Voluntary Product Standard PS-20-70, American Softwood Lumber Standard.

40. **"Grade, finish"** means the top surface elevation of lawns, walks, drives or other improved surfaces after completion of construction or grading operations. When used as a reference point in measuring building height, the grade shall be the average elevation of the finished ground at the exterior walls of the building.

41. **"Grade, natural"** means the elevation of the original or undisturbed natural surface of the ground.

42. **"Grounds"** means small strips of wood used to maintain the thickness of plaster at floor intersections and at openings; and for the attachment of trim, base and other millwork.

43. **"Grout"** means masonry mortar of pouring consistency such as used to fill voids of masonry units.

44. **"Hallway"** means the same as corridor.

45. **"Hallway, public"** means a public corridor or space separately enclosed or providing common access to all the exitways of a building in any story.

46. **"Header"** means a framing member installed perpendicular to floor, ceiling and roof framing members, and which supports members which terminate at vertical floor, ceiling and roof openings.

47. **"Joist"** means a series of floor, ceiling or roof framing members.

48. **"Ledger"** means a horizontal wood member which serves to support floor, ceiling or roof framing members in situations when these members cannot be placed on a direct bearing surface.

49. **"Lintel"** means the beam or girder placed over an opening in a wall, which supports the wall, floor, ceiling or roof structure above.

50. **"Listed"** refers to appliances and accessories which are shown in a list published by an approved, nationally recognized testing agency, namely the American Gas Assoc., Inc Laboratories, and Underwriters Laboratories, Inc., qualified and equipped for experimental testing, and maintaining an adequate periodic inspection of current production of listed models, and whose listing states either that the appliance or accessory complies with nationally recognized safety requirements, or has been tested and found safe for use in a specified manner Compliance is determined by the presence on the appliance or accessory of a label of the above named testing agencies.

51. **"Load, dead"** means the weight of all permanent construction, including walls, floors, roofs, partitions, stairways and of fixed service equipment.

52. **"Load, live"** means the weight superimposed by the use and occupancy of the building or structure, not including the wind loads, earthquake load or dead load.

53. **"Lookout"** means the horizontal framing member extending from end of rafter to exterior wall of building, and which supports soffit-facing material.

54. **"Lot"** means the same as building site.

55. **"Lot line"** means a line dividing one lot from another, or from a street or other public space.

56. **"Lumber, American standard"** means lumber conforming to the basic minimum size and grade provisions of the American Lumber Standards, when graded under rules approved by the Board of Review of the American Lumber Standards Committee, as hereinafter provided may be designated American Standard Lumber.

57. **"Lumber, dimensions"** refers to NBS Voluntary Product Standard PS-20-70, American Softwood Lumber Standard, Sept. 1, 1970, as adopted by reference to this code.

58. **"Lumber, dry"** means lumber which has been seasoned or dried to a moisture content of nineteen percent or less.

59. **"Lumber, grade"** see "grade".

60. **"Lumber, green"** means lumber having a moisture content in excess of nineteen percent.

61. **"Mobile home"** means a transportable single unit designed and built to be towed on its own chassis, comprised of frame and wheels, connected to utilities, and designed without a permanent foundation, for year-round living. A single unit may contain parts that may be folded, collapsed or telescoped when being towed, and expanded later to provide additional cubic capacity.

62. **"Moisture content"** means the weight of the water in wood, expressed in percentage of the weight of the dry wood.

63. **"Monolithic"** means a single large block or unit of stone or precast concrete.

64. **"Nail base"** means a sheathing material with sufficient density to permit its satisfactory use as a base for nail retention, particularly as it applies to the fastening of siding.

65. **"Nominal size"** means the commercial size given a piece of lumber or other material by the trades, other than its actual expressed size.

66. **"Occupancy load"** means the number of individuals normally occupying the building or part thereof, or for which the exit facilities were designed.

67. **"Passageway"** means an enclosed hallway or corridor connecting a required exit to a street or open area.

68. **"Patio"** means an open sided area adjacent to a building with a surfaced or semisurfaced floor, one which may or may not be roofed over.

69. **"Perm"** means the unit of measurement of the water vapor permeance of a material. Value of one perm is equal to one grain of water vapor per square foot per hour per inch of mercury vapor pressure difference.

70. **"Plate"** means a horizontal wood member which provides bearing and anchorage for wall, floor, ceiling and roof framing.

71. **"Plate, sill"** means a plate on top of foundation wall which supports floor framing.

72. **"Plate, wall"** means a plate at top or bottom of wall or partition framing, and further defined as top plate, at top, and sole plate, at bottom.

73. **"Plate, rafter, or joist"** mean a plate at the top of masonry or concrete wall supporting rafter or roof joist and ceiling framing.

74. **"Plinth"** means a solid concrete or masonry block at the base of a column. An ornamental wood trim member forming a base for door casing and a stop for baseboard.

75. **"Purlin"** means an intermediate supporting member at right angles to rafter or truss framing.

76. **"Rafters"** means a series of roof framing members, supporting roofs having slopes greater than three inches in twelve inches. Members supporting roofs having slopes three inches in twelve inches or less are defined as roof joists.

77. **"Ribbon"** see "Ledger".

78. **"Ridge board"** means the framing member forming the roof ridge on intersecting roofs and which serves as a base for ridge cut of the rafter.

79. **"Roof, flat"** means a roof having a slope of three inches in twelve inches or less.

80. **"Roof, gable"** means a two-way pitched roof which intersects at the ridgeline and has a pitch exceeding three inches in twelve inches.

81. **"Roof, gambrel"** means a two-way pitched roof which intersects at the ridgeline and with each roof slope having two distinct pitches.

82. **"Roof, hip"** means a four-way pitched roof which intersects both at the ridgeline and the hipline. All rafters bearing directly on exterior wall plates and the rafter pitch exceeding three inches in twelve inches.

83. **"Roof, mansard"** means a flat roof combining pitched projection around the perimeter of the building.

84. **"Roof, pitched"** means a roof having a slope of over three inches in twelve inches.

85. **"Roof structure"** means a structure above the roof of any part of a building enclosing a stairway, tank, elevator, machinery or heating or ventilating apparatus, or such part of a shaft as extends above the roof.

86. **"Room"** means a space within an enclosed building and set aside from other rooms or space by a permanent partition or partitions.

87. **"Room, habitable"** means a space used for living, sleeping, eating or cooking, or combinations thereof, but not including bathroom, toilet compartments, closets, halls, storage rooms, laundry and utility rooms, basement recreational rooms and similar spaces.

88. **"Room height"** means the vertical distance as measured from top of finished floor to face of finished ceiling.

89. **"Rooming unit"** means any room or group of rooms forming a single, habitable unit used or intended to be used for living and sleeping, but not for cooking purposes.

90. **"Sheathing"** means material fastened to studs for the purpose of structural strength and resistance to racking.

91. **"Sill"** means bottom members of door and window frames, or the area between top of foundation wall and floor framing.

92. **"Sill, seal"** means resilient material placed between floor framing and exterior foundation walls to retard horizontal air passage.

93. **"Sleeper"** means wood block or strip embedded and keyed in concrete for the purpose of anchoring surface finish materials thereto.

94. **"Soffit"** means horizontal enclosed surface under cornice projections, or dropped ceiling areas under which kitchen cabinets, etc., may be installed.

95. **"Soil"** means granular material which supports a building or structure.

96. **"Soil, fill"** means placement of soil in a natural or excavated ground depression.

97. **"Soil, organic"** means soil derived from or containing living organisms.

98. **"Soil, original"** means that soil which has not been altered by excavation.

99. **"Soil, undisturbed"** see "Soil, original".

100. **"Span"** means the unsupported horizontal distance between bearing points for horizontally placed framing members.

101. **"Special building district"** means the territory defined and mapped by city ordinance and which limits the materials of construction in buildings constructed within.

102. **"Stairway"** means one or more flights of stairs and the necessary landings and platforms connecting them to form a continuous and uninterrupted passage from one story to another in a building or structure.

103. **"Street line"** means a lot line dividing a lot from a street.

104. **"Structure"** means anything constructed or erected having location on or underground or attached to something having location on or under the ground.

105. **"Strut"** means a structural brace normally used as an integral part of designed trusses, joists, etc.

106. **"Stucco"** means a plaster product, the ingredients of which render it to be suitable for exterior use as a finished wall surface on buildings.

107. **"Studs"** means a series of vertical wall or partition framing members.

108. **"Subfloor"** means material applied directly to the top edge of floor joists.

109. **"T & G"** means tongue and groove.

110. **"Trimmer"** means a second horizontal framing member resulting in doubled members around the perimeter of vertical floor, ceiling and roof openings.

111. **"Truss"** means a structural framework composed of a series of members so arranged and fastened together that external loads applied at the joists will cause only direct stress in the members.

112. **"Trussed rafter"** means a truss where the chord members are also serving as rafters and ceiling joists and are subject to bending stress in addition to direct stress.

113. **"Underlayment"** means a course of floor material directly above the subfloor and applied as a base for any of a number of floor coverings.

114. **"Valley"** means the exterior roof angle formed by the intersection of two pitched roof slopes.

115. **"Vapor barrier"** means the water resistive membrane installed on the interior side of exterior building walls to prevent the penetration of water vapor through the wall.

116. **"Vent connector"** means the duct or pipe which connects the main building vent to the gas appliance so as to form a continuous open passageway from appliance to outside atmosphere for the purpose of removing products of combustion.

117. **"Web"** means a section of a structural shape, normally a beam, which connects the flanges.

118. **"Wood frame"** means a building or structure, the basic framework of which is wood.

119. **"Wythe"** means the single, vertical course of wall masonry or other material. (Ord. 6484 §2, 2004; Ord. 5332, 1993).

16.04.060 Highest standards prevail. In any case where a provision of this chapter is found to be in conflict with a provision of any zoning, building, fire, safety or health ordinance or code of the city existing on the effective date of the ordinance codified in this chapter, the provision which establishes the higher standard for the promotion and protection of the health and safety of the people shall prevail. Except as otherwise specifically provided, in any case where a provision of the ordinance codified in this chapter is found to be in conflict with a provision of any other ordinance or code of the city existing on the effective date of the ordinance codified in this chapter, which establishes a lower standard for the promotion and protection of the health and safety of the people, the provisions of the ordinance codified in this chapter shall prevail, and such other ordinances or codes are declared to be repealed to the extent that they may be found in conflict with the ordinance codified in this chapter. (Ord. 5332, 1993).

II. ADMINISTRATION

16.04.070 Building inspector--Qualifications--Duties. A. The building inspector shall have the necessary ability to supervise the general construction of buildings and the installation of permanent building equipment.

B. The building inspector shall be included within the surety bond covering city employees which is approved by the city council and which is conditioned upon the faithful performance of the duties of such employees.

C. The building inspector shall have, except where otherwise provided in this chapter, the general management and control of all matters pertaining to his or her office and shall enforce all state laws and city ordinances and lawful orders relating to the construction, alteration, repair, removal and safety of buildings and other structures and permanent building equipment.

D. The building inspector shall have full power to pass upon any question arising under the provisions of this chapter relating to buildings, subject to conditions contained in this chapter.

In case of dispute of anything bearing on a structural matter pertaining to this code, the building inspector shall have the privilege to ask for the assistance of a professional engineer or architect.

E. The building inspector shall keep a record of all building permits and regularly number each permit in the order of its issue. The inspector shall keep a record showing the number, description and valuation of all buildings erected during his or her term of office. The inspector shall prepare suitable forms for the applications and permits required and keep in his or her office a proper daily record of all of the transactions of his or her office and file a monthly and yearly report covering the same with the city council. The yearly report shall cover the period closing December 31st of each year, shall be filed on or before January 31st next thereafter, and shall show the total amount of fees earned, and a summary of the work of his or her office during said period.

F. The inspector may, consistent with the provisions of Wisconsin Statutes, Sections 66.0199, enter during reasonable hours any building or premises to make an inspection thereof, and to require the production of the permit for any building or permanent building equipment. No person shall refuse to permit such entry in the case of an emergency, or in any other case after a valid special inspection warrant has been duly issued therefor under Wisconsin Statute Section 66.0199, nor shall any person interfere with said inspector in the performance of his or her duties.

G. The building inspector shall have full power and authority to reject the use of improper or unfit materials in the construction, alteration and repair of buildings and other structures. All material and building components shall be used and installed as per manufacturer's recommendations or in accordance with its listing. (Ord. 5332, 1993).

16.04.080 Permit--Application--Issuance. A. No building or structure or any part thereof shall hereafter be built, enlarged, altered, moved on to a site or demolished within the city, or permanent building equipment installed (except as hereinafter provided) unless a permit therefor shall first be obtained from the

building inspector by the owner, or his agent, together with sidewalk grade from the city engineer. No building permit is required for work to be performed which is deemed minor repair or for underground tanks requiring a permit from the Eau Claire fire department.

The term "building" as used in this section shall include any building or structure and the permanent building equipment thereof and any enlargement, alteration, demolishing or moving on site of any building or structure or of permanent building equipment therein; also any material in any old building and the installation and piping of underground tanks, vaults and similar structures. "Permanent building equipment" shall include any and all provisions in a building for water, light, heat, power or ventilation service therein.

B. Application for a building permit shall be made in writing upon a blank form furnished by the building inspector stating the name and address of the owner of the building, the owner of the land upon which it is to be erected, the name and address of the architect or designer, shall describe the location of the building and purpose for which it is to be used, and shall contain such other information as the building inspector may require. With such application there shall be submitted to the building inspector two complete sets of plans and specifications covering the proposed building, alterations or improvements. A site plan showing the location of the building with respect to adjoining streets, alleys, lot lines and buildings, and also proposed drainage, parking arrangement, driveways or other pertinent information required by the building code or the zoning code shall be included, unless such has been submitted to, reviewed and approved by the Zoning Administrator or the Plan Commission. The site plan shall show positive drainage away from all buildings and shall indicate the elevation of the final front property line and the new garage floor or parking lot which must be elevated above the front property line such that the slope of the driveway is between one and fifteen percent. The elevation of the front property line shall meet the existing or proposed sidewalk elevations as established by the City Engineer's office. Driveway slopes desired to be beyond these limits will require special approval of the City Engineer. Driveways serving detached garages located at least 60 feet from a public street need not comply with this requirement. All building plans shall be drawn to a scale of not less than one-eighth inch per foot. Site plans shall be scaled in accordance with chapter 18.45. All distances and dimensions shall be accurately figured. Drawings that do not show all necessary details to enable the building inspector to inspect and examine them intelligently and work thereunder shall be rejected. In buildings of reinforced concrete construction, the plans shall show the system of reinforcement, size and location of steel, and size of columns, girders, beams and slabs.

C. If, in the opinion of the building inspector, the character of the structure and work is sufficiently described in the application, he may waive the filing of plans, provided the cost of such work does not exceed $5,000.

D. If the building inspector finds that the proposed building will comply in every respect with all ordinances of the city and all laws and lawful orders of the state of Wisconsin, he or she shall officially approve it and stamp one set of plans, returning them to the owner, and shall issue a building permit therefor, which shall be kept at the site of the proposed building. After being approved, the plans and specifications shall not be altered in any respect which involves the safety of the building, except with the written consent of the building inspector. In the case of a commercial or industrial building where adequate plans are presented, including an approved site plan, and work is carried out under the directions of a professional engineer or registered architect, the building inspector may, at his or her discretion, issue a permit for a part of the building before receiving the plans and specifications for the entire building. It shall be unlawful to commence work on any building or alteration before the building permit or waiver of plans has been issued.

E. No building permit shall be issued for any building or structure proposed to be located within any area designated as having a temporary zoning classification pursuant to the provisions of Wisconsin Statutes, Section 66.021(7)(a). (Ord. 6164 §3, 2001; Ord. 5332, 1993).

16.04.090 Permit--Fees. A. Before receiving a permit for buildings or structures containing the following uses, the owner, or his agent, shall pay to the city treasurer a fee as stated in the City of Eau Claire Fees and Licenses Schedule: (A building containing multiple uses shall be charged per the applicable use rate.)

1. Group I: Residential Uses, Apartments/ Condominiums, Three-Family and Over, Row Houses, Multiple Family Dwellings.

2. Group II: Industrial, Machine Shop, Community Services, Engineering and Utilities, and all other nonresidential uses not listed in other groups.

3. Group III: Warehouse, Mini-Warehouse, Freight Terminal, Storage Building, Parking Garage, and Building Shell (intended for future tenant space development).

4. Group IV: Office, Professional, Clinic, Hotel/Motel, Retail, School and Other Educational, Laboratory, Church and Other Religious, Funeral Home, Library, Assembly Hall, Amusement, Social and Recreational.

5. Group V: Hospital, Institutional, Nursing Home, Restaurant, Tavern, Repair Garage, Service Station, Convenience Store.

6. Group VI: Structures other than buildings.

7. Private attached garages and accessory buildings - agricultural buildings exempt from certain codes by Wisconsin Statutes.

8. Alterations, repair, and remodeling of all types and uses of buildings.

9. Plan examination, additions to and alterations of one- and two-family dwellings.

10. Re-roofing permits.

11. Wrecking - per building.

12. If the setting of grades is required in connection with any work performed under this subsection, a fee as stated in the City of Eau Claire Fees and Licenses Schedule shall be paid in addition to the permit fee.

13. Permit to start construction--Footing and foundation to grade.

14. Parking surface permit.

15. Construction site erosion control enforcement fee (disturbance of 1,000 sq. ft. or greater).

B. Plan examination and approval service for all types of buildings and structures specified in COMM 61.30, Wisconsin Administrative Code, except state-owned buildings and structures, shall be provided by the city building inspection division for buildings to be constructed, altered or enlarged within the corporate limits of the city, pursuant to s. 101.12, Wis. Stats., and which fall into the following categories:

1. A new building or structure containing less than fifty thousand cubic feet in total volume;

2. An alteration of a space involving less than one hundred thousand cubic feet in total volume;

3. a. An addition to a building or structure where the area of the addition results in the entire building or structure containing less than 50,000 cubic feet of total volume;

b. An addition containing no more than 2,500 sq. ft. of total floor area and no more than one floor level, provided the largest roof span does not exceed 18 feet and the exterior wall height does not exceed 12 feet.

4. Heating and ventilating for buildings or spaces listed in 1, 2 and 3.

C. Project waiver. 1. The city building inspection division may waive its jurisdiction for the plan review of a specific project or type of project, or components thereof, in which case plans and specifications shall be submitted to the Department of Commerce for review and approval.

2. The Department of Commerce may waive its jurisdiction for the plan review of a specific project, where agreed to by the city building inspection division, in which case plans and specifications shall be submitted to the inspection division for review and approval.

D. Before performing the plan examination and approval service as set forth in subsections B. and C., the owner, or his agent, shall pay to the city treasurer a fee as stated in the City of Eau Claire Fees and Licenses Schedule.

E. Special requested inspections, such as those necessary to fulfill a condition of a sales transaction or which are necessary due to a desired change in use of a building, will be conducted after payment of a fee as stated in the City of Eau Claire Fees and Licenses Schedule. (Ord. 6484 §3, 2004; Ord. 6363 §36, 2002; Ord. 6239 §1, 2001; Ord. 6164 §4, 2001; Ord. 5584 §2, 1996; Ord. 5484 §8, 1995; Ord. 5399 §4, 1994; Ord. 5332, 1993).

16.04.100 Permit--General conditions. A. With every permit issued, the building inspector shall issue to the applicant a weatherproof card, properly filled out. It shall be the duty of the applicant to place such card in a conspicuous place on the premises where the building is to be erected or demolished. The card is to be unobstructed from public view, not more than fifteen feet above grade and protected from damage.

B. A building or wrecking permit shall have lapsed and be void unless building or wrecking operations are commenced within six months from the date of issuance thereof. Lapsed permits may be renewed at a fee as stated in the City of Eau Claire Fees and Licenses Schedule within six months from the date of expiration. A permit shall expire if work on a building project is ceased for a period of twelve months or if 36 months has elapsed since permit issuance. Expired permits may be re-issued at the regular permit fee. All code and ordinance requirements in effect at the time of renewal or re-issuance shall apply to the building or wrecking project.

C. All exterior trim, siding, roofing, painting, entryway platforms, steps, sidewalks, driveways, grading and planting of disturbed areas not otherwise improved shall be complete within a period of one and one-half years from the date of the commencement of building construction, unless an extension is granted by the building inspector for reasonable cause. Wrecking projects shall be complete within three months from the date of the commencement of wrecking operations, unless an extension is granted by the building inspector for reasonable cause.

D. If the building inspector finds at any time that the applicable ordinances, laws, orders, plans or specifications are not being complied with, he or she shall revoke the permit, and written notice of such action shall be posted at the site of the work. When any such permit is revoked, it shall be unlawful to do any further work upon such building until the permit is reissued, excepting such work as the building inspector shall, by written order, require to be done as a condition precedent to the reissuance of the permit.

E. It shall be the duty of all police officers to report at once to the building inspector any building upon or in which they know work is being carried on without a permit as required by this chapter.

F. Buildings and building sites shall be inspected at such time and in such manner as may be necessary to secure compliance with the laws, ordinances, rules, orders and approved plans applicable thereto. The following inspections are the minimum required at each permitted project unless waived by the building inspector. All inspections shall be conducted by the building inspector or his designee.

1. Footing inspection prior to placing concrete or other structural components.
2. Rough-in inspection prior to closing of walls and ceilings.
3. Final grading/pre-pavement inspection of all driveways and parking lots.
4. Final inspection as described below.

G. All buildings, additions and alterations shall have final inspection upon completion and before occupancy, except as herein provided. If, on the final inspection by the building inspector, the electrical inspector, the plumbing inspector and the heating inspector, no violation of this or any other ordinance, law or order be found, the fact shall be so certified to by the zoning administrator and building inspector, who shall thereupon issue a certificate of occupancy, stating the purpose for which the building is to be used. No building or part thereof shall be occupied until such final inspection is conducted and certificate has been issued except with the written consent of the building inspector, nor shall any building be occupied in any manner which conflicts with the conditions set forth in the certificate of occupancy. The certificate of occupancy may be waived for accessory buildings and structures, small additions, minor alterations or those projects where no zoning ordinance requirements are affected. (Ord. 6363 §36, 2002; Ord. 6239 §1, 2001; Ord. 5332, 1993).

16.04.110 Unsafe buildings--Determination--Abatement. A. Whenever the building inspector finds that any building or structure, or any part thereof, is dangerous to life or adjoining property by reason of bad conditions, defective construction, overloaded floors, decay, lack of guards against fire, unsecured doors, windows and other openings, general dilapidation or other cause, he or she shall order the owner or tenant thereof to cause it to be made safe or to be removed, as in the judgment of the building inspector may be necessary; and he or she shall also affix a notice of such order in a conspicuous place on the outside wall of the building and no person shall remove or deface such notice. The owner or tenant of such building or structure shall thereupon immediately cause it to be made safe, or to be removed, as ordered. Any person who fails to comply with any such order shall be guilty of a violation of this chapter.

B. Where the public safety requires immediate action, the building inspector shall enter upon the premises with such assistance as may be necessary, and cause the building or structure to be made safe or to be removed with the expense of such work to be recovered by the city in action against the owner or tenant, or the expense may be assessed against the property upon the tax roll. The Fire Department and City/County Health Department shall give all reasonable assistance to the building inspector in such work. (Ord. 5332, 1993).

16.04.120 Alterations and repairs. The following provisions shall apply to buildings altered or repaired:

A. Alterations. When not in conflict with any regulations, alterations to any existing building or structure, accommodating a legal occupancy and use but of nonconforming type of construction, which affect the structural strength, fire hazard, exits, required natural lighting, or replacement of major equipment, then such construction shall be made to conform to the minimum requirements of this code applicable to such occupancy and use and given type of construction.

B. Minor Repairs. Repairs for purposes of maintenance, or replacements in any existing building or structure which do not involve the structural portions of the building or structure, or which do not affect room arrangement, light and ventilation, energy conservation, access to or efficiency of any exit stairway or exits, fire protection, or exterior aesthetic appearance, and which do not increase a given occupancy and use, shall be deemed minor repairs not requiring a building permit. Residing, reroofing or replacement of more than 25 percent of a building's interior wall and ceiling plaster, gypsum wallboard or similar wall surfaces shall not be deemed minor repair.

C. Major Alterations and Repairs. If alterations and repairs are proposed to be made at a cost which will exceed fifty percent of the current fair market value of said building, the alterations and repairs as well as all other existing noncomplying building components found necessary for adequate safety shall be made to comply with the requirements of this code. If the subject building is damaged by fire or other cause, the fair market value is that value before such damage occurred.

D. Alterations and Repairs Required. When any of the structural members of any building or structure have deteriorated from any cause whatsoever to less than their required strength, the owner of such a building or structure shall cause such structural members to be restored to their required strength. Upon failure to comply with the above structural repairs by the owner, the building or structure shall be considered a

menace to public safety and shall be vacated and thereafter no further occupancy or use of the same shall be permitted until the regulations of this code are complied with. (Ord. 5332, 1993).

16.04.130 Building use changes. If the use or occupancy of an existing building is changed to a use or occupancy which would not be permitted in a similar building hereafter erected, the entire building shall be made to conform to the requirements of this code or the applicable state code for new buildings. (Ord. 5332, 1993).

16.04.140 Building maintenance. The requirements contained in this code covering the maintenance of buildings shall apply to all buildings and/or structures now existing or hereafter erected. All buildings and/or structures and all parts thereof shall be maintained in a safe condition, and all devices or safeguards which are required in the erection, alteration or repair of any building shall be maintained in good working order. This section shall not be construed as permitting the removal or nonmaintenance of any existing devices or safeguards unless authorized in writing by the building inspector. (Ord. 5332, 1993).

16.04.150 Penalty and violations. A. Any person, firm or corporation violating any provision of this chapter shall, upon conviction thereof, be punished by a forfeiture of not less than $20 nor more than $500, together with the costs of prosecution, and every day of violation shall constitute a separate offense. If the defendant fails or refuses to pay the forfeiture and costs, the court shall enter a judgment that the defendant be imprisoned in the county jail for a term not to exceed three months unless the forfeiture and costs are sooner paid.

B. A stop work order may be served on the owner or his or her representative and a copy thereof shall be posted at the construction site. Such stop work order shall not be removed except by written notice of the building inspector after satisfactory evidence has been supplied that the cited violation has been corrected.

C. Nothing in this section shall preclude the issuance of a citation or citations pursuant to Chapter 1.24 or shall preclude the city from maintaining an appropriate action to prevent or remove a violation of any provision of this chapter. (Ord. 5332, 1993).

16.04.160 Building code committee. A. Creation and Membership. For the purpose of considering amendments, appeals, and the approval of new building materials or methods, there is created a building code committee. The committee shall consist of five members that shall be recommended by the advisory committee on appointments and confirmed by the city council; at least one of whom shall be a registered architect, at least one of whom shall be a registered professional engineer and at least one of whom shall be a member of the Eau Claire area home builders association or an individual currently active in the home building field.

Of the members first appointed hereunder, one shall be appointed to a one-year term, two shall be appointed to a two-year term and two shall be appointed to a three-year term. Thereafter, the term of office shall be three years. The term of office for the initial appointees under this subsection shall commence as of July 1, 1972.

B. Appeals. An appeal may be taken to the building code committee by any person, firm or corporation, or by any officer, department, board or bureau aggrieved by a decision of the building inspector. Application for appeal may be made when it is claimed that:

1. The true intent of the building code or the regulations adopted thereunder have been incorrectly interpreted; or

2. The provisions of the code do not fully apply. The appeal shall be made within such time as shall be prescribed by the building code committee by filing with the building inspector a notice of appeal specifying the grounds thereof, which appeal shall be accompanied by a fee as stated in the City of Eau Claire Fees and Licenses Schedule, payable to the treasurer of the city. The building inspector shall, within seven days of the receipt thereof, transmit to the committee all of the papers constituting the record upon which the action appealed from was taken. The committee shall thereupon hold a public hearing on the appeal within thirty days of the receipt thereof. Final action shall be taken not more than fifteen days from the date of termination of the public hearing.

All decisions and findings of the building code committee, on appeals, shall in all instances be final administrative determinations and shall be subject to review by court as by law may be provided. A copy of such findings shall remain on file in the office of the building inspector as public records.

C. Amendments.

1. Proposed amendments to the building code shall be filed with the building inspector, in such form and accompanied by such information as shall be required by the building inspector and the building code committee. This data shall be forwarded by the building inspector to the committee. The committee shall thereupon hold a public hearing on the proposed amendment, within thirty days of the receipt thereof.

2. The building code committee shall not recommend the adoption of a proposed amendment unless it finds that the adoption of such an amendment is in the public interest and is not solely for the interest of the applicant.

3. The building code committee shall make written findings of fact and shall submit them, together with its recommendations, to the city council for final action.

The city council shall act finally upon an application for a proposed amendment within thirty days after the time of its receipt from the building code committee.

D. Application for Approval of New Materials or Methods.

1. Submission of New Materials or Methods. Any person desiring to submit any building materials, methods or systems of construction, or arrangements of material to determine the adaptability of the same for building purposes, or to establish the safety qualifications of any substance for occupancy purposes not having been provided for in this code, and not having been previously approved for use by the building inspector or certified by the building code committee, shall make application in writing to the building inspector setting forth the merits claimed, and the purpose desired, together with such laboratory tests and other supporting data as the applicant may wish to furnish. If, in the judgment of the building inspector, further evidence is necessary to ensure the adaptability or safety of the same, he or she may require further tests to be made or additional data submitted by another recognized testing, research and evaluation agency.

2. Recommendation by the Building Inspector. Upon the completion of his investigation of the tests and data submitted, the building inspector shall report to the committee the results of such investigation and recommend whether or not the use of such materials, methods, systems or arrangement of materials for construction should be permitted in buildings erected under the provisions of this code. Such recommendation shall be in writing and shall set forth the reasons relied upon in making such recommendations.

3. Certification by the Building Code Committee. If, on consideration of the report and recommendation of the building inspector, and on the basis of such further investigation as it may deem necessary, the committee shall determine that such materials, methods, systems, or arrangement of materials for construction are satisfactory for use in buildings constructed under this code, it shall certify this fact to the building inspector, who shall record such certification in the records of the building inspector. The committee may, in its judgment, also submit such recommendations as it deems necessary to the city council.

In addition, the committee, upon the request of the building inspector, is empowered and authorized to make such other analyses and recommendations of combinations of materials of standard practice in the building industry, and of mechanical equipment, devices and appurtenances relative to building construction and maintenance.

E. Meetings and Rules. All meetings of the building code committee shall be held at the call of the chairman and at such times as the committee may determine. A copy of every report of recommendation of the building code committee shall be filed immediately in the office of the building inspector and shall be a public record. The building code committee shall adopt its own rules and procedure, not in conflict with the provisions of this code or with applicable Wisconsin Statutes. (Charter Ord. 6935, 2010; Ord. 6363 §36, 2002; Ord. 5332, 1993).

III. CONSTRUCTION -- GENERAL

16.04.170 Requirements applying to all buildings. A. Roofing. All roofing shall be installed to shed water and as per the manufacturer's recommendations. If a product is listed by a testing agency, their installation procedures must also be followed.

1. Built up roofing or pitch and gravel-type roofing shall not be installed or added so as to exceed the roof's designed dead load.

2. Adding layers of shingles or other roofing material. Adding additional layers will be allowed only if the roof's designed dead load will not be exceeded. A maximum of three layers of shingles is permitted.

B. Frost Protection. Buildings and structures constructed during freezing conditions or partially completed construction projects which are suspended during winter time months must have footings, foundations and slabs adequately protected to prevent damage due to frost. No footings, slabs or floors shall be placed over frozen material. Concrete and masonry placed during cold weather shall be protected in accordance with guidelines of the American Concrete Institute. (Ord. 5332, 1993).

16.04.180 Construction requirements--Applicability. The provisions of the State Uniform Dwelling Code, COMM Chapters 20-25 of the Wisconsin Administrative Code, are hereby adopted along with the following specific requirements to apply to buildings, additions and alterations thereto, used as one- and two-family dwellings constructed prior to June 1, 1980 and to any accessory building or other buildings or structures not included within the scope of another adopted code. The following requirements are meant to supplement the Uniform Dwelling Code, however, some may be more and some less stringent than the

requirements of the Uniform Dwelling Code. When there is a conflict between these requirements and the applicable adopted code, these requirements shall apply regardless of the provisions of S. 16.04.060.

A. One- and Two-Family Dwellings.

1. Additions shall have frost footings 4 feet below grade. The addition's footings may be less than 4' below grade if designed by an architect or professional engineer so as to prevent damage due to frost. Properly designed grade beam type footings will be permitted if supporting an unheated area.

2. Minimum floor space and room arrangement of a dwelling or dwelling unit shall be as specified in section 16.08.100 A., B., and C. of the city housing code.

3. Main exit exterior stairways to all second floor separate dwelling units shall be constructed of treated or naturally decay-resistive wood and shall be either covered or constructed in a manner so as to allow rain and snow to drain and be removed easily.

4. Existing stairways serving newly created finished areas which do not meet the 3 feet minimum width requirement may exist at a 32 inch minimum width if a handrail is installed on only one side of the stairway. All other requirements of COMM 21.04 must be complied with.

5. Smoke detectors specified by COMM 21.09 shall be required when the cost of alterations, repairs or additions to one- and two-family dwellings exceeds 50 percent of fair market value of the building. Interconnection of the detectors will be required where the construction makes such feasible. If this cost is not exceeded, smoke detectors shall be installed and maintained in accordance with ss. 101.645(3), Stats., and the specifications of the manufacturer.

6. Energy conservation. Alterations which involve exterior walls, floors over unheated areas or ceilings below unheated areas shall include the addition of insulation to those affected areas so as to meet the minimum requirements of Chapter COMM 22. Additions shall also meet the requirements of Chapter COMM 22. The owner shall have the option of calculating the necessary compliance by using the cold surface areas of the addition only or may calculate the additions thermal performance in conjunction with those of the entire existing building. If the latter option is chosen, insulation levels of all concealed spaces must be determined, as well as thermal values of existing doors and windows.

7. Alterations and repairs will not be required to meet the provisions of COMM 21.03(8) and (9).

8. Habitable rooms below grade will be permitted if:

a. Existing foundation walls have no evidence of water penetration from the exterior of the structure or adequate alterations are made to correct such problems;

b. Compliance with all applicable requirements of COMM Chapters 21 through 23 is obtained.

B. Accessory Buildings & Structures

1. Foundations. The following requirements shall be in addition to those found in Subchapters III and IV of Chapter COMM 21.

a. Detached accessory buildings, unless constructed of concrete or masonry, need not have foundations installed below the minimum frost penetration.

b. Floating slab type foundations will be permitted if designed through structural analysis or constructed in accordance with the design as shown on a handout entitled "Garage Details" and available in the building inspectors' office.

c. Continuous footings will be allowed if constructed in accordance with the design shown on the above referenced handout.

d. Wood foundations utilizing approved pressure treated lumber and plywood will be allowed if designed and constructed in accordance with recognized standards.

e. All untreated wood, excluding door trim and jambs shall be kept a minimum of 4 inches above the concrete floor of a building used for motor vehicle parking and 3 inches above any exterior hard surfaced area.

f. All accessory buildings and structures shall be anchored so as to withstand an uplift pressure of 20 pounds per square foot acting over the surface area.

2. Only accessory buildings having a floor area of 200 square feet or less may contain a wood floor. Such buildings shall be placed on an approved foundation with a continuous masonry, concrete or treated wood curb to prevent rodent entry. The untreated wood floor must be at least 8 inches above grade.

3. A concrete floor meeting the requirements of Section COMM 21.20 shall be installed in all buildings or areas thereof where motor vehicles will routinely be driven and parked. Existing asphalt surfaces will be allowed to remain within the perimeter of a newly constructed carport.

4. Conventionally framed pitched roofs require ceiling ties at 4 feet maximum spacing.

5. Separation from dwelling units must be in accordance with COMM 21.08(1).

6. One foot minimum eaves shall be required on all buildings greater than 150 square feet unless such building is designed to match the architectural style of the main building.

7. Pole type buildings shall meet all applicable sections of this code, as well as the following requirements:

a. The following information shall be submitted. This submittal shall bear the seal of an architect or professional engineer registered in the state of Wisconsin. A master plan will be accepted which covers a series of buildings to eliminate separate submittal for each building:

(1) Framing plan showing all members, special erection instructions, and any required permanent bracing.

(2) Bearing support and connection details.

(3) Calculations to determine compliance with the following loads:

i. Snow load of 40 P.S.F.

ii. Wind load with a horizontal and uplift pressure of 20 P.S.F. acting over the surface area.

(4) Calculations showing depth of pole embedment.

(5) Structural analysis of trussed rafters and pre-fabricated trusses.

b. All wood poles, grade boards, girts, and siding in contact with the earth shall be treated with preservative. All lumber and plywood required to be treated shall be identified by a quality mark or certificate of inspection of an approved inspection agency.

c. All metal exterior coverings must be factory painted. Specifications and process of application may be required showing compliance with industry standards.

d. Trim shall be installed over all exposed portions of framing material used to construct eaves, overhangs, corners, door and window frames so as to completely finish the exterior of the building.

e. Company names or logos shall not be permitted on the exterior of the building.

f. All products used shall be installed per manufacturer's recommendations.

C. Attached Garages and Carports.

1. Garages and carports shall have frost footings 4 feet below grade. If the existing building's footings are less than 4 feet below grade, the addition's footings may extend to such level only if designed by an architect or engineer so as to prevent movement due to frost. Properly designed grade beam type footings will be permitted if supporting an unheated area.

2. Fire separation shall be in accordance with COMM 21.08(1). A carport having no enclosed uses above and entirely open on two or more sides need not have a fire separation between the carport and the dwelling.

3. A concrete floor meeting the requirements of Section COMM 21.203 shall be installed in all buildings or areas thereof where motor vehicles will routinely be driven and parked. Existing asphalt surfaces will be allowed to remain within the perimeter of a newly constructed carport.

4. All untreated wood, excluding door trim & jambs, shall be kept a minimum of 4 inches above the concrete floor of an area used for motor vehicle parking and 3 inches above any exterior hard surfaced area. (Ord. 6484 §4, 2004; Ord. 6164 §5, 2001; Ord. 5332, 1993).

Residential accessory buildings shall conform to the size, height, and separation requirement found in Chapter 18.30 of the Zoning Ordinance.

IV. RETAINING WALLS

16.04.190 Definitions. A. "Retaining wall" means a wall designed to resist the lateral displacement of soil or other material.

B. "Retaining wall height" is measured along a retaining wall's vertical projection and is the distance from grade at its base to grade at its cap. A series of stepped retaining walls in which the step between them is less than the height of the next higher wall shall be considered as one retaining wall. (Ord. 5332, 1993).

16.04.200 Permit required. No retaining wall which is vertical or within 27 degrees of vertical, and more than 3 feet in height or between 27 and 45 degrees of vertical, and more than 10 feet in height and which exists closer to a property line than its height shall be constructed without a building permit having been issued therefor by the building inspector. The fee for said permit shall be as stated in the City of Eau Claire Fees and Licenses Schedule. Application for such permit shall be made in writing on forms furnished by the building inspector and shall contain appropriate plans and specifications, showing the proposed location of the retaining wall in relation to property and street lines and such other information as the building inspector may require in accordance with the provisions of this subchapter. The application shall generally comply with the standards required of an application for a building permit under section 16.04.080, insofar as the same is applicable. Retaining walls constructed under city contract and those approved along with building and site plans shall be exempt from permit requirements. (Ord. 6363 §36, 2002; Ord. 5332, 1993).

16.04.210 Construction and structural design. A. A retaining wall shall be designed to withstand the loads imposed upon it, including both dead and live load surcharges to which such walls are subjected, and to insure stability against overturning, sliding, excessive foundation pressure and water uplift. Unless drainage is provided, the hydrostatic head of the water pressure shall be assumed to be equal to the height of the wall.

B. Retaining walls which require a building permit shall be designed by an architect or professional engineer or in accordance with a recognized manufactured retaining wall system.

C. Forty-two inch high railings or other approved barriers shall be installed on or adjacent to the top of retaining walls which are located below and closer than two feet to a walk, path, parking lot or driveway used by the general public. (Ord. 5332, 1993).

16.04.220 Unsafe retaining walls--Determination/abatement. Whenever the building inspector or city engineer finds that an existing retaining wall, or any part thereof, is dangerous to life or adjoining property by reason of bad conditions, defective construction, decay, general dilapidation or other cause, the property owner upon which the wall exists shall be ordered to cause it to be made safe or to be removed and replaced, as in the judgment of the building inspector may be necessary. The property owner of such structure shall thereupon immediately cause it to be made safe, or to be removed and replaced, as ordered. Any person who fails to comply with any such order shall be guilty of a violation of this chapter.

Where the public safety requires immediate action, the building inspector shall enter upon the premises with such assistance as may be necessary, and cause the structure to be made safe or to be removed and replaced with the expense of such work to be recovered by the city in action against the owner, or the expense may be assessed against the property upon the tax roll. The city engineer shall give all reasonable assistance to the building inspector in such work. (Ord. 5332, 1993).

V. SWIMMING POOLS

16.04.230 Definitions. In this subchapter, unless the context clearly indicates otherwise:

A. "Swimming pool" means a receptacle of water or an artificial pool of water having a depth capacity at any point of more than 2 feet, intended for the immersion or partial immersion of human beings, and including all appurtenant equipment.

B. "Barrier" means a fence, wall, building wall or combination thereof which completely surrounds the swimming pool and obstructs access to the swimming pool. (Ord. 5332, 1993).

16.04.240 Permit required. No swimming pool shall be installed or constructed without a permit having been issued therefor by the building inspector. The fee for said permit shall be as stated in the City of Eau Claire Fees and Licenses Schedule. Application for such permit shall be made in writing on forms furnished by the building inspector and shall contain appropriate plans and specifications, showing the proposed location of the swimming pool and such other information as the building inspector may require in accordance with the provisions of this subchapter. The application shall generally comply with the standards required of an application for a building permit under section 16.04.080, insofar as the same is applicable. (Ord. 6363 §36, 2002; Ord. 5332, 1993).

16.04.250 Fencing. A. All outdoor swimming pools having a depth capacity of 2 feet or more shall be provided with a barrier complying with this subchapter prior to use of the swimming pool. Barriers shall comply with the following:

1. Solid barriers that do not have openings, such as a masonry or stone wall, shall not contain indentations or protrusions except for normal construction tolerances and tooled masonry joints.

2. Any doorway located in a building wall forming all or part of a barrier which opens to a swimming pool from a dwelling unit shall be exempt from the requirements of subsection B.

3. Barriers shall be not less than 4 feet in height above the ground level immediately below. The barrier shall be at least 4 feet in height above a plane extending horizontally away from the swimming pool for a distance of 4 feet from the fence or barrier.

4. Where the barrier consists of a chain link fence, the fence shall be of not less than 11 1/2 gauge chain link with a maximum mesh size of 1 1/4 inch square, or such other construction which will make access to the swimming pool area equally difficult.

5. Where the barrier is composed of horizontal and vertical members and the distance between the tops of the horizontal members is less than 45 inches, the horizontal members shall be located on the swimming pool side of the barrier and spacing between vertical members shall not exceed 1 3/4 inches in width.

6. Where the barrier is composed of diagonal members, such as a lattice fence, the maximum opening formed by the diagonal members shall not be more than 1 3/4 inches. Other designs which will not allow small children to climb the barrier may have openings up to 4 inches.

7. Any open space between the bottom of the barrier and the ground shall not exceed 4 inches.

8. All barrier material and barrier posts shall be resistant to decay and corrosion and such posts shall be set in concrete bases or similarly secured.

9. Barriers shall be located so that permanent structures, equipment or similar objects cannot be used to climb the barrier.

B. Each barrier opening or point of entry into the pool area enclosure shall be equipped with a gate or door which complies with the above requirements. Each gate or door shall be equipped to accommodate a locking device. Pedestrian access gates or doors shall open outward away from the pool and shall be equipped with self-closing and self-latching devices placed at the top of the gate or at a place which is otherwise inaccessible to small children. Gates other than pedestrian access gates shall only require a latching device and shall be continually locked when not in use.

C. All such outdoor swimming pools which are located above ground and encompassed by an exterior wall having a height of 4 feet or more may utilize such wall as the required barrier, provided that all such above-ground pools shall be equipped with an effective fence and gate system at all points of entry to the pool constructed to the specifications contained in subsections A and B.

D. Prior to filling with water, each such outdoor pool shall be enclosed by either barriers as required above or a temporary construction fence. Such temporary fence shall be a snow fence or similar design at least 4 feet in height and securely anchored in place. The fence shall be constructed with its base flush to the ground and shall have supportive posts placed no more than 8 feet apart. The fence shall remain in place until such time as a permanent barrier is installed as provided in this section. The installation of a permanent barrier shall take place no later than 60 days after the initial filling of the swimming pool.

E. This section and section 16.04.260 shall apply to all swimming pools except those lawfully constructed prior to the effective date of this section (July 7, 1993). Any reconstruction, alteration or modification of a swimming pool lawfully constructed prior to the effective date of this section or its barrier shall be in compliance with the provisions of this section and section 16.04.260. (Ord. 5332, 1993).

16.04.260 Construction and structural design. A. All swimming pool plumbing and electrical facilities shall be installed in accordance and compliance with Chapter COMM 82, Wisconsin Administrative Code, and the Wisconsin State Electrical Code, COMM 16, Wisconsin Administrative Code. All swimming pools, other than above ground pools, shall be completely surrounded by a walkway of concrete or other approved material, at least 3 feet in width and designed so as to prevent back drainage into the pool. If drains are provided in such walkways, they shall not be connected to the recirculation system piping.

B. The pool structure shall be engineered and designed to withstand the expected forces to which it will be subjected. All connections to the city water supply or sewer system shall be approved by the inspection division. (Ord. 5332, 1993).

16.04.270 Health department approval. Plans and specifications for public swimming pools shall be submitted to and approved by the health department prior to issuance of a permit under section 16.04.240. (Ord. 5332, 1993).

VI. DEMOLITION OF STRUCTURES

16.04.280 Permit required. No demolition work shall commence without a wrecking permit having been issued therefor by the building inspector. The fee for said permit shall be as indicated in section 16.04.090. (Ord. 5332, 1993).

16.04.285 Structures listed on the national or state register of historic places. A. No permit shall be issued for the demolition of any structure listed on the national or state register of historic places until 60 days has elapsed from the date of application for that permit. Notice of such application shall be delivered to the chair or at least one member of the landmarks commission within 5 days of the filing of such application.

B. This section shall not apply where the building inspections division determines that the condition of such a structure is so damaged, dilapidated, or unsafe that it poses an immediate and serious threat to the public safety. In such instances, the time limits prescribed by s. 66.0413 (3) of the Wisconsin Statutes shall apply. (Ord. 5952, 1999).

16.04.290 Safety provisions. A. Adequate temporary guards, barricades and fences shall be erected where necessary for the protection of the public and adjoining property during building razing operations. A temporary construction fence shall be erected to completely enclose the demolition site whenever the area is left without supervision and until the building is completely removed and any basement area or excavation is filled to existing grade level. Such temporary fence shall be a snow fence or similar

design at least 4 feet in height and securely anchored in place. The fence shall be constructed with its base flush to the ground and shall have supportive posts placed no more than 8 feet apart.

B. If the razing operation requires use of a portion of the public right-of-way adjoining the site, a permit must be secured prior to commencement of work from the city engineer's office. All conditions of such permit must be adhered to. The permittee is responsible to sign and barricade the work site according to the latest "Manual of Uniform and Traffic Control Devices for Streets and Highways." All barricades shall display the name of the contractor or utility company and the telephone number of the responsible person to call in case of problems. If city crews are called out to maintain barricades, flashers, or warning lights, the permittee will be billed for the service.

If the razing operation requires closing the street, the city engineer's office must be notified twenty-four (24) hours prior to the closing. Detour routes are to be approved before permission is granted. All barricades and detour signs shall be furnished and maintained by the Permittee. If the city is required to provide this service, the cost will be billed to the permittee.

C. Debris from the demolition site shall not be allowed to fall or accumulate in the roadway, but shall be retained within the operating area. No person shall leave litter, building debris, excavations or ground piles on property on which a building has been razed. If work is not being done in a satisfactory manner or is not progressing, thus causing a public safety hazard and nuisance, the Building Inspection Division shall, after a written notice specifying a definite period within which persons concerned shall clean up the property and level off the ground to the adjoining level, cause such work to be done, and the cost thereof shall be borne by the property or the property owner.

D. The permittee shall take all appropriate measures to ensure the health and safety of the general public. This shall include professional extermination of any rodents before razing structures and proper removal and disposal of hazardous material such as asbestos, buried petroleum tanks, and other stored material. Any known hazardous material must be removed and disposed of in accordance with all applicable laws. The City-County Health Department shall give all reasonable assistance to the building inspector in determining the presence of hazardous materials or rodent infestation.

E. If the razing operation causes excessive dust due to the building material being disturbed, the building shall be sufficiently dampened at intervals necessary to prevent as much as possible, airborne debris and dust. (Ord. 6164 §7, 2001; Ord. 5332, 1993).

16.04.300 General requirements. A. Prior to demolition, the owner or contractor shall notify all utilities having service connections to the structure. Demolition operations shall not commence until all service connections and appurtenant equipment, such as meters and regulators, have been removed or sealed and plugged in a safe manner. The city water utility division shall be contacted to shut off the water at the curb box and remove the water meter. It will be the property owner's responsibility to have the water and sewer disconnected and properly terminated by a licensed plumber. The city engineer shall determine where the water and sewer laterals shall be terminated.

B. Prior to demolition, the property owner or permittee shall notify the owners of adjoining lots which may be affected by such razing operation and may have facilities which must be temporarily removed due to the proposed work. A sufficient amount of time shall be given for such removal and protection of property.

C. All parts of the demolished structure shall be removed from the site and disposed of properly. Concrete, stone, brick and masonry may be buried on site if properly broken up and covered with at least two feet of clean earth fill. Concrete basement floors shall be fractured to allow water to pass through. Such fill shall be mixed with any buried material and properly compacted during the fill operation. Four inches of black dirt shall be placed on top of all disturbed areas, leveled, raked smooth and seeded. Black dirt may be eliminated when new improvements to the site are planned to commence immediately after razing operations. Installation of retaining walls, fences or other erosion control methods may be required if such structure removal creates unsafe or hazardous conditions including the likelihood of soil erosion. (Ord. 5332, 1993).

VII. MOVED STRUCTURES

16.04.310 Permit required. No building or structure shall be moved in the city of Eau Claire without a moving permit having been issued therefor by the building inspector. (Ord. 5332, 1993).

16.04.320 Compliance. Buildings and structures moved into or within the city shall comply with the standards of the city's Housing Maintenance and Occupancy Code and to those provisions of the building code found necessary to assure adequate safety as determined by the building inspector and shall not be used or occupied in whole or in part until a final inspection has been made and a certificate of occupancy issued by the building inspector. (Ord. 5332, 1993).

16.04.330 Safety provisions. A. When a building is moved off from a site in the city, adequate temporary guards, barricades and fences around open basements shall be erected where necessary for the

protection of the public and adjoining property. Basement areas and excavations must be filled and the site prepared as set forth in section 16.04.300 C.

B. No person shall leave litter, building debris, excavations or ground piles on property on which a building has been moved. (Ord. 5332, 1993).

VIII. SPECIAL BUILDING DISTRICT

16.04.340 Special building district--Scope. This section establishes a special building district which comprises those areas containing congested business and commercial uses which have buildings located in close proximity to one another and thereby subject to major conflagration. The purpose of establishing the special building district is to minimize the possibility of fire involving a series of buildings or structures by regulating their construction. (Ord. 5332, 1993).

16.04.350 Special building district boundaries defined Following are the legal descriptions of the special building district within the city:

A. Downtown Area – Lots 1 through 8, Block 1; Lots 1 through 10, Block 2; Lots 1 through 10, Block 3; Lots 1 through 10, Block 4; Lots 1 through 10, Block 6; Lots 1 through 10, Block 7; Lots 1 through 10, Block 12; Lots 1 through 10, Block 13; Lots 1 through 10, Block 14; Lots 1 through 10, Block 15; Lots 1 through 10, Block 16; Lots 1 through 10, and vacated alley in Block 17; Lots 1 through 6, and vacated alley in Block 18; Lots 1 through 10, Block 22; Lots 1 through 10, and vacated alley in Block 24; Lots 1 through 4, Block 58; Lots 1 through 10, Block 62; Lots 1, 2, the South 20 feet of Lot 8, and Lots 9 and 10, Block 63; Lots 8 through 10, Block 64, Village of Eau Claire. Lots 1 through 10, Block 1; and Lots 11 through 14, Block 2, Drummond Cameron & Eau Claire Lumber Company's Subdivision and Addition to the City of Eau Claire. Lots 1 through 8, Block 59, Ritzinger and Lenz Subdivision of part of Block 59 of the Village of Eau Claire. Lots 1 through 6, Block 2, Chapman & Thorp's Third Addition to Eau Claire. Lots 1 through 12, Block 8; Lots 1 through 10, Block 9; Lots 1 through 14, and vacated alley in Block 18; Lots 5 through 8, Block 25, of Huyssen, Marfield, Galloway and Meredith's Addition to City of Eau Claire. A part of Government Lot 4, Section 20, T 27 N, R 9 W, City of Eau Claire, Eau Claire County, Wisconsin described as follows: Beginning at the southwest corner of Block 58 Original Plat Village of Eau Claire, thence west on north line of Eau Claire Street 45 feet thence north parallel with west line of said block to the Eau Claire River, thence easterly along the river to westerly right-of-way of Barstow Street, thence southerly along Barstow Street to the northeast corner of Block 58, thence westerly to the northwest corner Block 58, thence southerly to point of beginning.

B. Water Street Area- Lots 8 through 28, Block 21; Lots 8 through 28, Block 22; the N1/2 of Lots 9 and 10, and Lots 23 through 32, Block 23; Lots 1 through 11, Block 28, Eau Claire City; Lots 1 through 8 and the E1/2 of Lot 9, Block 29; Lots 1, 2, and 3, Block 30; Lots 8 through 28, Block 31; Lots 3, 4, 5 and Lots 11 through 16 and the W1/2 of Lot 17 and Lots 26 through 30, Block 32, Randall's First Addition; Lots 25, 26, 27 and 28, Block 48, Randall's Second Addition.

C. West Grand Avenue Area - Lots 1 and 2, Block 2; Lots 6 through 11, Block 3, Chapman and Thorp's Second Addition.

D. Bellinger Street Area - Lots 1 through 4 and Lots 11 through 15, Block 7; Lots 2 through 4, Block 9, Whipple and Bellinger's Addition. (Ord. 6951, 2011; Ord. 6484 §5, 2004; Ord. 5659, 1996; Ord. 5332, 1993).

16.04.360 Restrictions within the special building district. All buildings and structures and all additions to existing buildings and structures shall comply with the following restrictions.

A. General. All buildings, structures, and additions to all existing buildings and structures erected on or after July 1, 2002 within the boundaries of the special building district shall be of types I, II, III, or IV construction, as defined in chapter 6 of the Wisconsin Enrolled Commercial Building Code (Volume I). Alterations and remodeling of all buildings and structures existing prior to July 1, 2002 within the boundaries of the special building district shall not change the class of construction of such building or structure as it existed on July 1, 2002 and as defined in Chapter COMM 51 of the Wisconsin Administrative Code (Building and Heating, Ventilating and Air Conditioning Code).

B. Additions. Additions onto existing one- or two-story wood-frame buildings will be allowed if constructed of one of the types of construction referred to under subsection A. of this section.

C. Exterior wall alterations. Existing exterior wood-frame walls which front streets, alleys or open courts at least 10 feet wide and on the same lot as the building may be replaced with walls of noncombustible construction.

D. Minor changes. Changes, alterations, or repairs to an existing wood-frame building may be permitted, provided such changes do not increase the fire hazard of the building or endanger the public safety. Whether or not fire hazard or public safety is increased shall be reasonably determined by the building inspector and chief of the fire department.

E. 1. Decorative combustible materials on buildings existing before July 1, 2002. Any combustible materials applied to a required noncombustible exterior surface of "0" hourly rated construction or better shall not exceed the surface area percentage specified below within any 100 lineal feet of the building.

Separation of Building From Property Line or Other Buildings[1]	Maximum Surface Area Percentage[2]
Less than 10 feet	0
10 to 20 feet	10
20 to 30 feet	20
More than 30 feet	30

[1]The maximum surface area percentage along a street is 30, regardless of the separation.

[2]Fire-retardant treated wood may be applied to all required noncombustible exterior surfaces of "0" hourly rated construction without limit.

2. Decorative combustible materials on the exterior side of exterior walls of buildings or additions constructed on or after July 1, 2002 shall comply with Section 1406 of the Wisconsin Enrolled Commercial Building Code.

F. Damaged structures. Any existing wood-frame building within the special building district which may hereafter be damaged by any cause to the extent where the cost of restoration would amount to more than 50 percent of its fair market value shall not be repaired or rebuilt, but shall be removed completely from the premises. Any future structure shall conform to the provisions of these rules. A landmark or building or structure in a historic district designated under ch. 2.65 may be exempted from this requirement by the plan commission and the landmarks commission upon a determination that such exemption is not contrary to the purposes expressed in s. 16.04.340.

G. Exceptions. The following buildings and structures are excluded from coverage under this section:

1. Temporary one-story wood-frame buildings or mobile home type offices for the use of builders on approved construction projects;

2. Detached accessory buildings not over 120 square feet in size and 10 feet in height if set back 10 feet from all property lines and other buildings on the same lot;

3. Temporary platforms, reviewing stands and other similar miscellaneous structures;

4. Wooden fences not over 8 feet high;

5. Permanent wooden park or river overlook structures if located at least 10' from another building or structure. (Ord. 6484 §6, 2004; Ord. 6164 §8, 2001; Ord. 5332, 1993).

Chapter 16.08

HOUSING CODE

Sections:

16.08.010 Interpretation.
16.08.020 Declaration of Findings and Necessity.
16.08.030 Purpose.
16.08.040 Short Title.
16.08.050 Applicability.
16.08.060 Definitions.
16.08.070 Duties of Owners and Occupants.
16.08.080 Structures, Facilities, Plumbing, and Space Requirements.
16.08.090 Safety and Personal Security.
16.08.100 Lighting and Electrical Systems.
16.08.110 Thermal Comfort, Ventilation, and Energy Efficiency.
16.08.120 Moisture Control, Solid Waste, and Pest Management .
16.08.130 Chemical and Radiological Agents.
16.08.140 Housing Appearance.
16.08.150 Housing Inspectors Inspections and Duties.
16.08.160 Residential Rental Dwelling Unit Registration.
16.08.170 Regularly Scheduled Residential Inspection Program.
16.08.180 Retaliatory Eviction and Other Retaliation Prohibited.
16.08.185 Authorized Contact Person.
16.08.190 Housing Advisory Board.

16.08.200 Enforcement--Notices, Orders and Hearings.
16.08.210 Unfit Dwellings--Condemnation Procedure.
16.08.220 Violation--Penalty.
16.08.230 Prevailing Regulations and Severability.

16.08.010 Interpretation. The general provisions of Sections 16.08.020 through 16.08.050 shall apply in the interpretation and enforcement of the ordinance codified in this chapter.

16.08.020 Declaration of Findings and Necessity. The City Council recognizes the following:

A. There exists and may in the future exist, within the city, premises, dwellings, dwellings units, or parts thereof, which by reason of their structure, equipment, sanitation, maintenance, use or occupancy affect or are likely to affect adversely the public health, including the physical, mental, and social well-being of persons and families, safety and general welfare.

B. To correct and prevent the existence of such adverse conditions, and to achieve and maintain such levels of residential environmental quality as will protect and promote public health, safety and general welfare, it is further found that the establishment and enforcement of minimum housing standards is required.

C. The preservation of the existing rental housing stock is of tremendous importance. Rental housing provides needed, affordable housing for many and is a valuable asset that must be preserved and maintained for its citizens.

D. Substandard and deficient owner-occupied and rental housing units jeopardize the health, safety, and welfare of their occupants and the public. Substandard housing conditions pose a particularly acute risk to vulnerable populations including young children, seniors, and people with chronic illnesses, and, when at critical levels, are unsafe and unfit for human occupancy.

E. Reliance on only a complaint-based enforcement program is inadequate to ensure that rental housing properties are safely and adequately maintained. Inspection authorities often do not receive complaints about rental units with the worst violations of health and safety codes. Tenants may lack information about how to seek assistance, fear eviction or other forms of retaliation for reporting violations, or may face language or education barriers preventing them from using complaint-based programs.

F. Deteriorating and substandard buildings and dwelling units also threaten the physical, social, and economic stability of nearby properties, surrounding neighborhoods, and the community as a whole. The City encourages property owners to take preventative maintenance actions as a more cost effective approach than deferred maintenance, and to prevent substandard and deficient housing. Housing codes that include targeted inspection programs increase timely maintenance and, in partnership with private property owners, prevent or eliminate blight, thereby furthering safe, healthy, and vibrant neighborhoods while preserving or increasing property values in what is most people's largest investment, their homes.

G. Accordingly, it is the intent of the City Council to enact the provisions of this chapter to establish safe housing standards and a regularly scheduled inspection program to secure city-wide compliance of properties with these minimum standards. Adoption and the application of this chapter by the City and property owners will reduce blight and help to ensure that all persons who live in Eau Claire are provided decent, safe and sanitary housing.

16.08.030 Purpose. The purpose of the ordinance codified in this chapter is to protect, preserve, and promote the physical and mental health and social well-being of the people, to prevent and control incidence of communicable diseases, to regulate privately and publicly-owned dwellings for the purpose of maintaining adequate sanitation and public health, and to protect the safety of the people and to promote the general welfare by legislation which shall be applicable to all dwellings now in existence or hereafter constructed. It is further declared that the purpose of the ordinance codified in this chapter is to insure that the quality of housing is adequate for protection of public health, safety, and general welfare, including: establishment of minimum standards for basic equipment and facilities for light, ventilation and thermal conditions, for safety from fire and accidents, for the use and location and amount of space for human occupancy, and for an adequate level of maintenance; determination of the responsibilities of owners and occupants of dwellings, and provisions for the administration and enforcement.

16.08.040 Short title. This chapter shall be known and may be cited as the Housing Maintenance and Occupancy Code of the city of Eau Claire, Wisconsin.

16.08.050 Applicability. The provisions of this code shall apply to all buildings used or designed for human habitation. Nothing in this Chapter shall limit or prohibit the authority of City officers or employees from enforcing any other provision of this Code or any state or federal law under their jurisdiction. None of the inspection provisions shall prohibit, condition, or otherwise limit any inspection conducted under any other provision of this Code or other applicable law.

16.08.060 Definitions.

1. “Abandoned dwelling” means a dwelling which is not occupied and which is not intended by the owner to be occupied within a reasonable period of time. A dwelling shall be presumed to be abandoned if it is unoccupied for a period of 12 consecutive months.

2. “Accessory structure” means a structure subordinate to the main or principal structure and located on the same lot, the use of which is customarily incidental to the main building such as garage or shed.

3. “Approved” means approved by the local or state authority having such administrative authority.

4. “Asbestos” is the term used for a group of naturally occurring minerals that separate into fibers which are mined and milled for commercial use including chrysotile, amosite, crocidolite; or, in fibrous form, tremolite asbestos, anthophyllite asbestos, or actinolite asbestos.

5. “Asbestos-containing material” means any material or product containing more than one percent asbestos.

6. “Backdrafting” means improper venting of combustion appliances that causes combustion by-products or other gases to enter the indoor environment rather than to exhaust outdoors.

7. “Balusters” means pillars or columns in a series supporting a rail or guard.

8. “Basement” means that portion of a building below the first floor or ground floor with its entire floor below grade.

9. “Bathroom” means an enclosed space containing one or more bathtubs or showers, or both, or which may contain toilets, lavatories, or fixtures serving similar purposes.

10. “Biological agent” means but is not be limited to mold, infestation, human and animal waste, wastewater, sewage, rotting material, and accumulation of trash that may harbor viruses, parasites, fungi, and/or bacteria.

11. “Building” means any structure built for the support, shelter and enclosure of persons, animals, chattels, or movable property of any kind, and which is permanently affixed to the land, or connected to a utility, and includes those structures resting on runners, wheels, or similar supports.

12. “Bulk storage container” means a metal trash container that is more than 40 inches (102 cm) in height, has a capacity of more than two cubic yards (1.5 m^3), and is equipped with fittings for hydraulic and/or mechanical emptying, unloading, and/or removal.

13. “Carbon monoxide alarm” means an electronic device that measures the level of carbon monoxide gas in the air and is equipped with a sensor that activates an audible alarm when an amount of carbon monoxide above the device’s threshold level accumulates in the area in which the alarm is located.

14. “Chemical agent” means chemicals that have the potential to cause adverse health effects.

15. “Chimney” means a vertical masonry shaft of reinforced concrete or other approved noncombustible, heat-resisting material enclosing one or more flues, to remove products of combustion from solid, liquid, or gaseous fuel.

16. “Class ABC fire extinguisher” means a fire extinguisher capable of putting out (1) fires in ordinary combustible materials, such as wood, cloth, paper, rubber, and many plastics (Class A); (2) fires in flammable liquids, combustible liquids, petroleum greases, tars, oils, oil-based paints, solvents, lacquers, alcohols, and flammable gases (Class B); and (3) fires that involve energized electrical equipment (Class C).

17. “Cleanable” means moisture-resistant, free from cracks, pitting, chips, or tears, and designed to be cleaned frequently.

18. “Commercial Building Code” means the state code, chapters SPS 360-366 and any amendments, revisions, or renumbering of the state Commercial Building Code, which applies to all buildings larger than two family dwellings.

19. “Common areas” means areas within multifamily housing that are designated for use by all occupants, owners, tenants, or users of a building or building complex, including but not limited to corridors, hallways, lobbies, parking areas, laundry rooms, recreational spaces, pools, and exterior property.

20. “Common path of egress travel” means the portion of exit access which occupants are required to traverse before two separate and distinct paths of egress travel to two exits are available.

21. “Department” means the Eau Claire City-County Health Department or designee.

22. “Deterioration” means the condition or appearance of a building or part thereof, characterized by breaks, holes, rot, crumbling, cracking, peeling, rusting, or other evidence of physical decay or neglect, excessive use of, or lack of maintenance.

23. “Dilapidated” describes a building, structure or part thereof which is in a state of ruin or shabbiness resulting from neglect. The term implies a hazard to life or property.

24. “Dormitory” means a room in any dwelling used for sleeping purposes by four or more unrelated persons.

25. “Dwelling” means any enclosed space which is wholly or partly used or intended to be used for living or sleeping by human occupants.

26. “Dwelling unit” means any room or group of rooms located within a dwelling and forming a single habitable unit with facilities which are used or intended to be used for living, sleeping, cooking, and eating.

27. “Egress” means the path available for a person to leave a building.

28. “Electrical system” means a system that makes electricity available in a building and distributes it through outlets and lighting fixtures for occupant use.

29. “Emergency escape and rescue opening” means an operable window, door, or other similar device that provides for a means of escape and access for rescue in the event of an emergency.

30. “Extermination” means the control and elimination of insects, rodents or other pests by eliminating their harborage places; by removing or making in accessible materials that may serve as their food; by poisoning, spraying, fumigating, trapping or by any other recognized and legal pest elimination methods approved by the local or state authority having such administrative authority.

31. “Flue” means a conduit made of non-combustible heat-resisting material that is used to remove the products of combustion from solid, liquid, or gaseous fuel.

32. “Flat roof deck” means to have a pitch of not more than 2.5 inches in 12 inches with a minimum area of 14 square feet and a minimum dimension of not less than 3 feet.

33. “Formaldehyde” means the colorless, flammable carcinogenic chemical, an organic compound with the formula HCHO, which is used in the manufacture of building materials (e.g., pressed wood products) and household products. Federal limits for formaldehyde emissions from building materials (hardwood plywood, medium-density fiberboard, and particleboard) were established in 15 U.S.C. 2697(b) (2).

34. “Friable asbestos” means asbestos-containing material which can be crumbled, pulverized, or reduced to powder by hand pressure. Common types of friable asbestos-containing material include pipe insulation and sprayed or tiled on insulation materials.

35. “Grade” is the level of the finished surface of the ground adjacent to the exterior walls of the building or structure.

36. “Guard” means a building component or a system of building components located near the open sides of elevated walking surfaces or adjacent to a window that minimizes the possibility of a fall from the walking surface or window to the lower level.

37. “Guest” means any person who shares a dwelling unit in a non- permanent status for not more than thirty days.

38. “Habitable room” means a room or enclosed floor space used or intended to be used for living, sleeping, or dining purposes, excluding bathrooms, water closet compartments, laundries, furnace rooms, pantries, utility rooms, foyers, or communicating corridors, stairways, closets, and storage spaces, as well as workshops and hobby and recreation areas in parts of the structure below ground level or in attics.

39. “Handrail” means a horizontal or sloping rail intended for grasping by the hand for guidance or support.

40. “Harborage” means any conditions or place where pests can obtain water or food, nest, or obtain shelter.

41. “Housing inspector” means a City or Department sanitarian, building inspector, fire inspector, or other employee or agent authorized and assigned to conduct inspections under this chapter.

42. “Heating system” means facilities that, for the purpose of maintaining thermal comfort during cold weather, heat air or water through a furnace or heat pump and distribute such heat through vents, ducts, pipes, or radiators, or hardwired electrical heaters. Neither a cooking appliance nor a portable, unvented fuel-burning space heater is a heating system.

43. “Housing advisory board” is the board appointed to act on appeals regarding this code.

44. “Human health hazard” means any substance, activity or condition that is known to have the potential to cause acute or chronic illness or death if exposure to the substance, activity or condition is not abated.

45. “Imminent lead hazard” means a lead hazard that, if allowed to continue, will place a person at immediate risk of lead exposure and lead poisoning.

46. “Infestation” means the recurrent presence of any life stages of a pest that presents a hazard to humans, property, or the environment.

47. “Unsanitary condition” is a condition constituting a danger or hazard to the health of a person or persons occupying or frequenting a building or premises, or to the general public.

48. “Insects” means all species of classes of Arachnida and Insecta (Hexapoda) of the phylum Arthropoda and includes but is not limited to flies, mosquitoes, bed bugs, crickets, cockroaches, moths, bees, wasps, hornets, fleas, lice, beetles, weevils, gnats, ants, termites, mites, ticks, spiders, and scorpions.

49. “Integrated pest management” means a systematic strategy for managing pests that consists of prevention, exclusion, monitoring, and suppression of pests. Methods to manage pests include eliminating their harborage places; removing or making inaccessible their food and water sources; routine inspection and monitoring; identification of evidence found; treatment that is scaled to and designed for the infestation; using the least-toxic pesticide for the identified pest; and follow-up inspection until the infestation is gone.

50. “Interim control of lead hazards” means any set of measures designed to temporarily reduce human exposure or likely exposure to a lead hazard, including specialized cleaning, repair, maintenance, painting, temporary containment and ongoing monitoring of lead hazards or potential lead hazards.

51. “Kitchen” means any room containing any or all of the following equipment, or area of a room within three feet of such equipment: Sink and/or other device for dish washing, stove or other device for cooking, refrigerator or other device for cool storage of food, cabinets and/or shelves for storage of equipment and utensils, and counter or table for food preparation.

52. “Ldn (day-night equivalent sound level)” means a weighted average sound level measured over a 24-hour period with adjustments anticipating reduced levels during evening and night hours to factor occupants’ extra sensitivity to noise during those time periods.

53. “LAeq” means an average sound level measured over a specified period.

54. “Lead-based paint” means paint or any other surface coating material containing more than 0.06% lead by weight, calculated as lead metal, in the total nonvolatile content of liquid paint or more than 0.7 mg/cm^2 by X-ray fluorescent spectroscopy in the dried film of applied paint.

55. “Lead-contaminated dust” means surface dust in dwellings that contain an area or mass concentration of lead in levels exceeding current federal or state standards or guidelines.

56. “Lead-contaminated soil” means bare soil that contains lead at or above 400µg/g (micrograms per gram) and could be a lead hazard to one or more persons.

57. “Lead hazard” means any substance, surface or object that contains lead and that, due to its condition, location, or nature, may contribute to the lead poisoning or lead exposure of a person.

58. “Lead hazard abatement” means any set of measures designed to permanently eliminate a lead hazard, including all of the following:

a. The removal of lead-based paint and lead- contaminated dust, the permanent containment or encapsulation of lead based paint, the replacement of surfaces or fixtures painted with lead-based paint, and the removal or covering of lead-contaminated soil.

b. All preparation, clean-up, disposal and associated post-abatement clearance testing activities.

59. “Lead hazard reduction” means actions designed to reduce human exposure to lead hazards, including lead hazard abatement and interim control activities involving lead-based paint or lead-contaminated dust or soil or clearance activities that determine whether an environment contains a lead hazard.

60. “Let” means to lease or grant the use and possession of real property whether or not for compensation.

61. “Long-lasting battery” means a battery having a life of ten or more years.

62. “Methamphetamine” means the synthetic drug with more rapid and lasting effects than amphetamine, sometimes used or manufactured illegally as a stimulant.

63. “Mold” means a growth that a fungus produces on damp or decaying organic matter or on living organisms.

64. “Multiple dwelling/Multifamily housing” means any dwelling containing more than two dwelling units.

65. “Non-friable asbestos” means two categories of asbestos-containing materials that cannot be crumbled to powder by hand pressure.

a. Category I is pliable (not brittle), breaks by tearing rather than fracturing, and does not release asbestos fibers upon breaking. Common types are resilient floor covering and asphalt roofing products.

b. Category II is any material, excluding category I, containing asbestos that is brittle (not pliable), breaks by fracturing rather than tearing, and does release some asbestos fiber upon breaking. Common types are rigid exterior siding and boards known as transite.

66. “Occupant” means any person, over one year of age, living, sleeping, cooking or eating in, or actually having possession of a dwelling unit, except that in dwelling units a guest will not be considered an occupant.

67. “Ordinary maximum summer conditions” means a temperature of 92° F.

68. “Ordinary minimum winter conditions” means a temperature of -21° F.

69. “Owner” means any person who, alone or jointly or severally with others:

a. Shall have legal title to any dwelling or dwelling unit, with or without accompanying actual possession thereof; or

b. Shall have charge, care or control of any dwelling or dwelling unit, as owner or agent of the owner, or an executor, operator, administrator, trustee or guardian of the estate of the owner. Any such person thus representing the actual owner shall be bound to comply with the provisions of this chapter and of rules and regulations adopted pursuant thereto, to the same extent as if he or she were the owner.

70. “Person” means any individual, firm, corporation and its officers, association, partnership, cooperative, trustee, executor of an estate, governmental agency, or any other legal entity recognized by law..

71. “Plumbing” means and includes all of the following supplied facilities and equipment: Gas pipes, gas burning equipment, water pipes, garbage disposal units, waste pipes, toilets, sinks, installed dishwashers, lavatories, bathtubs, shower baths, installed clothes washing machines, catch basins, drains, vents, and any other similar supplied fixtures, together with all connections to water, sewer or gas lines.

72. “Potable water” means water that complies with the maximum contaminant limits of the United States Environmental Protection Agency (EPA) or any federal agency given similar regulatory oversight as the EPA after the approval of this ordinance and the regulatory limits set by the Wisconsin Department of Natural Resources or any state agency given similar regulatory oversight after the approval of this ordinance.

73. “Premises” means a platted lot or part thereof or unplatted lot or parcel of land or plot of land, either occupied or unoccupied by a dwelling or non-dwelling structure and includes any such building, accessory structure or other structure thereon.

74. “Privacy” means the ability of a person or persons to carry out an activity commenced without interruption or interference, either by sight or sound, by unwanted persons.

75. “Radon” means the odorless, tasteless, and invisible gas found in both outdoor air and indoor air that is a form of ionizing radiation produced by the decay of uranium in soil and water.

76. “Recyclable materials” means disposable products composed of glass, metal, paper, plastic, and similar content that can be processed to produce a new supply of the same material or be reused in the production of other materials.

77. “Resident” means a resident of the jurisdiction.

78. “Residential Building Code” means the state Uniform Dwelling Code, SPS 320-325, and any amendments, revisions, or renumbering of the state Uniform Dwelling Code, which applies to one and two family dwellings only.

79. “Residential dwelling unit" means a structure or part of a structure, home, residence, or living unit by a single person or family, or any grounds, or other facilities or area occupied for the use of a resident. Residential dwelling unit does not include facilities that are inspected, owned, licensed or certified by the State of Wisconsin including rest homes, convalescent homes, nursing homes, hospitals, assisted living centers, community based residential facilities, university -owned student dormitories, or adult homes, and properties owned or operated by the Eau Claire Housing Authority.

80. “Residential rental dwelling unit" means a structure or part of a structure, home, residence, or living unit by a single person or family, or any grounds, or other facilities or area occupied for the use of a residential tenant and includes, but without limitation, apartment units and buildings, mobile homes and single and two-family dwellings.

Residential Rental Dwelling Unit does not include:

a. Facilities that are inspected, owned, licensed or certified by the State of Wisconsin including rest homes, convalescent homes, nursing homes, hospitals, assisted living centers, community based residential facilities, university-owned student dormitories, or adult homes, and properties owned or operated by the Eau Claire Housing Authority,

b. Units for transient lodging, including hotels, motels, inns, tourist homes, or on-campus housing accommodations owned, operated, or managed by an institution of higher education or secondary school for occupancy by its students.

c. Rental units otherwise exempted from inspection by state, federal, or local law.

d. Rental units regularly inspected under the Federal Section 8 housing program.

81. “Riser” means the vertical surface that connects one tread of a step or stair to the next.

82. “Rodent” means any member of the order Rodentia.

83. “Room” is a space within an enclosed building, and set aside from other rooms or space by a permanent partition or partitions.

84. “Safe and healthy” means the condition of being free from danger and chemical, biological, and physical agents that may cause injury, disease, or death; and fit for human occupancy.

85. “Smoke” means emissions from a lighted pipe, cigar, cigarette, hookah, weed, herbs, or any other lighted biomass-burning substances such as but not limited to tobacco, marijuana, and incense.

86. “Smoke detector” means a device that is equipped to activate an audible alarm when it detects the presence of combustion products in air.

87. “Space heater” means a self-contained heating appliance of either the circulating type or the radiant type and intended primarily to heat only a limited space or area such as one room or two adjoining rooms.

88. “Trash container” means a container with a tightfitting lid that is constructed of metal or other durable material that is impervious to rodents, insects, and handling stress; and is capable of being filled, emptied, and cleaned without creating unsanitary conditions.

89. “Tread” means the horizontal surface of a step or stair.

90. “Vacant dwelling” means a dwelling which is unoccupied for a temporary period of time, less than 12 consecutive months and is intended by the owner to be occupied in the future, provided that such occupancy is bona fide and not to be acquired for the sole purpose of defeating the vacancy of the dwelling.

91. “Ventilation system” means the natural or mechanical process of supplying or removing conditioned or unconditioned air to or from a space.

92. “Waterproof” means impervious to water.

93. “Watertight” means closely sealed, fastened, or fitted so that no water enters or passes through the surface.

94. “Weathertight” means secure against penetration by air, wind, rain, snow, and other weather conditions. (Ord. 7221, 2017; Ord. 6362 §1, 2002; Ord. 5766 §2, 1997; Ord. 4667 §1, 1986; Ord. 4622 §1, 1986; Ord. 4409 §1, 1983; Ord. 3653 §1, 1976; Ord. 3158 §IA, 1970; Ord. 3116 §I (part), 1970; Prior code §§1101-1101.53).

16.08.070 Duties of Owners and Occupants. A. No owner shall occupy or let to any other occupant any vacant dwelling unit unless it is sanitary and fit for human occupancy.

B. The owner has the duty to ensure that the structure, dwelling, dwelling unit, common areas, and premises are maintained in a safe and healthy condition, in compliance with this Chapter, the Code, and other applicable requirements.

C. The owner shall ensure the collection of trash and recyclables and provide and maintain trash containers, bulk storage containers, recycling containers, and areas where the containers are stored.

D. The owner shall maintain the building and premises to keep pests from entering the building and dwelling units, inspect and monitor for pests, and eliminate pest infestation in accordance with integrated pest management methods.

E. The owner shall not cause or allow any water, sewage, electrical, or gas service, facility, or equipment required for safe and healthy occupancy to be removed, shut off, or discontinued for any occupied dwelling, except for such temporary interruption as may be necessary while repairs or alterations are being performed, or during temporary emergencies requiring discontinuance of service. This provision does not apply where the occupant has contractual control over the service and shall not be interpreted as preventing a utility company from discontinuing service for reasons allowed by law.

1. If contractually assigned, no occupant shall cause or allow any water, sewage, electrical, or gas service, facility, or equipment required for safe and healthy occupancy to be removed, shut off, or discontinued for any occupied dwelling, except for such temporary interruption as may be necessary while repairs or alterations are being performed, or during temporary emergencies requiring discontinuance of service.

F. The occupant shall report unsafe or unhealthy conditions to the owner. The owner shall investigate occupant reports of unsafe or unhealthy conditions and, if necessary, make needed repairs in a timely manner.

G. The occupant shall properly use and operate the dwelling unit and owner-supplied fixtures and facilities controlled by the occupant in order to maintain a safe, clean and healthy environment within the dwelling unit, and report unsafe or unhealthy conditions, including breakdowns, leaks, and other problems requiring repair to the owner in a timely manner.

H. The occupant shall place trash and recyclables in the appropriate containers.

I. The occupant shall work with the owner to ensure pest-free conditions in accordance with integrated pest management.

J. If the occupant’s action leads to pooling of water or another excessive moisture problem inside the dwelling unit, the occupant shall clean up and dry out the area in a timely manner.

K. Every occupant of a dwelling or dwelling unit shall be responsible for hanging all screens, storm

windows or storm doors, except the owner shall be responsible where he or she has agreed to supply such services, or where the dwelling unit is above the first floor.

L. Every occupant of a dwelling containing a single dwelling unit shall be responsible for the extermination of any insects, rodents or other pests therein or on the premises; and every occupant of a dwelling unit in a dwelling containing more than one dwelling unit shall be responsible for such extermination whenever his dwelling unit is the only one infested. Notwithstanding the foregoing provisions of this subsection, whenever infestation is caused by failure of the owner to maintain a dwelling in a rodent-proof or reasonably insect-proof condition, extermination shall be the responsibility of the owner. Whenever infestation exists in two or more of the dwelling units in any dwelling, or in the shared or public parts of any dwelling containing two or more dwelling units, extermination thereof shall be the responsibility of the owner.

16.08.080 Structures, Facilities, Plumbing, and Space Requirements. A. Structure. Every foundation, roof, floor, exterior and interior wall, ceiling, inside and outside stair, porch, trim, accessory structure, fence, door, window, and window glass shall be safe to use and capable of supporting the intended design loads and load effects and shall be in good condition.

B. Facilities. Every plumbing fixture and pipe, chimney, flue, smoke pipe, and every other facility, piece of equipment, or utility shall be installed in conformance with applicable statutes, ordinances, and regulations.

1. Mechanical, utility, and heating equipment shall be separated from habitable rooms.

C. Plumbing System. Every plumbing fixture, stack, vent, water, waste, and sewer pipe shall be properly installed, maintained in a safe and functional order, and kept free from obstructions, leaks, and defects.

1. An approved potable water supply system shall provide an adequate amount of safe running water under pressure to all fixtures simultaneously.

2. All potable water supply piping and fittings for each plumbing fixture shall be installed in such a manner that backflow or back siphonage cannot occur. Backflow connections shall not be permitted between the piping system carrying potable water and any piping system or plumbing equipment carrying nonpotable water or water-borne waste. All drinking fountains provided in any building or on any premises shall comply with the requirements of the Eau Claire plumbing code.

3. An adequate supply of heated running water under pressure shall be supplied to sinks, bathtubs, showers, and laundry facilities. A minimum temperature of 110°F (43°C) and a maximum temperature of 120°F (49°C) shall be provided at the point of use of the fixture. The temperature of water discharged from a tankless water heater shall not exceed 140°F (60°C).

4. Every waste pipe shall be connected to a public sewer system or an approved private sewage disposal system. The drainage system shall have a cleanout.

5. A private water supply shall be tested annually to ensure that water does not have biological contaminants.

D. Kitchen. Every dwelling unit shall have a kitchen equipped with the following:

1. A kitchen sink in good working condition that is properly connected to heated and unheated water supplies and waste pipes. Any provided dishwasher and components of the sink, including disposal and water filtration devices, shall be in good working condition and properly connected.

2. A counter for food preparation and cabinets and/or shelves sufficient to store occupants' food that does not require refrigeration and eating, drinking, and food preparation equipment. Cabinets shall have tight-fitting doors and no gaps between any surfaces. The counter, countertop edges, cabinets, and shelves shall be of sound construction and furnished with surfaces that are impervious to water, smooth, and cleanable.

3. A range for cooking food. The range shall be properly installed with all necessary connections for safe and efficient operation and shall be maintained in good working condition.

a. The range shall include an oven unless both a separate oven, other than a microwave oven, and a cooktop are provided. A hot plate is not an acceptable substitute for burners on a range or cooktop. The range or cooktop shall have a vertical clearance of not less than 30 inches (762 mm) from above its surface to unprotected combustible material. Reduced clearances are permitted in accordance with the listing and labeling of the range hood.

b. Ventilation for the range shall be provided in accordance with Section 16.08.110(C).

c. If the lease does not provide for a range for cooking food, adequate connections for the occupant's installation and operation of a range shall be provided.

4. A refrigerator with a freezer. The refrigerator shall be in good working condition, of sufficient size to store occupants' food that requires refrigeration, and capable of maintaining a temperature less than 41° F (6° C) but more than 32° F (0° C). The freezer section shall be capable of maintaining a temperature below 0° F (-18° C).

a. If the lease does not provide for a refrigerator, adequate connections for the occupant's installation and operation of a refrigerator shall be provided.

5. A kitchen floor in good condition with a sealed, water-resistant, nonabsorbent, and cleanable surface.

E. Bathroom. Every dwelling unit shall have a private bathroom equipped with the following:

1. A toilet in good working condition that is sealed to the waste pipe and affixed to the floor and properly connected to both the dwelling's water supply and a waste pipe leading to an approved sewage system or private waste disposal system.

2. A sink in good working condition, with a stable connection to the wall or secure attachment to the floor that is properly connected to the heated and unheated potable water supply and a sealed trap leading to a waste pipe.

3. A bathtub or shower in good working condition that is properly connected to the heated and unheated potable water supply and a waste pipe. The bottoms of bathtubs and shower floors shall have permanent or removable nonslip surfaces.

4. Cleanable nonabsorbent water-resistant material on floor surfaces and extending on bathroom walls at least 48 inches (122 cm) above a bathtub and 72 inches (183 cm) above the floor of a shower stall. Such materials on walls and floors shall form a watertight joint with each other and with the bathtub or shower.

5. Ventilation for the bathroom provided in accordance with Section 16.08.110(C).

6. If present, grab bars shall be firmly anchored to the wall adjacent to each bathtub, shower, and toilet in accordance with the Americans with Disabilities Act Design Guidelines.

F. The dwelling shall provide privacy and adequate space for sleeping and living.

1. A bathroom or toilet room shall not be the only passageway to the exterior of the dwelling.

2. The ceiling height of any habitable room shall be at least 84 inches (213 cm). In a habitable room with a sloping ceiling, at least one-half of the floor area shall have a ceiling height of at least 84 inches (213 cm). If any part of a room has a ceiling height lower than 60 inches (152 cm), its floor area shall not be considered in computing the floor area of the room.

3. In a one or two family dwelling, a habitable room shall be provided with natural light by windows in accordance with 16.08.100, and ventilation in accordance with Section 16.08.110(C). In such a room, the ceiling and any ducts, pipes, and other obstructions shall be at least 84 inches (213 cm) above the floor throughout the room, and walls and floors shall be waterproof and free of dampness.

G. Floors and floor coverings shall be attached at each threshold, maintained in safe and healthy condition, capable of being cleaned, and free of bulges and buckling. Carpets shall have no tears, folds, or bumps.

H. The structure and facilities shall be maintained so that the noise level in the interior of the dwelling unit caused by exterior sources is below 45 dB Ldn (day-night equivalent sound level).
(Ord. 7221, 2017; Ord. 5766 §3, 1997; Ord. 4667 §2, 1986; Ord. 4622 §2, 1986; Ord. 4409 §2, 1983; Ord. 3532 §§1, 2, 1975; Ord. 3116 §I(part), 1970; Prior code §§1102--1102.09).

16.08.090 Safety and Personal Security. A. Egress. In accordance with local codes, dwelling units shall have at least two doors to be used as means of egress that serve as emergency escape and rescue openings. Each egress shall lead outside or to a common corridor without passing through another dwelling unit. In multifamily dwellings, one exit per unit will be allowed where the occupant load does not exceed 10 persons, and the common path of egress travel does not exceed 75 feet of travel distance.

1. Egress routes shall be unobstructed. Doors along egress routes shall be openable from the inside without the use of a key or tool.

2. In multifamily dwellings, when not equipped throughout with an automatic sprinkler system, any bedroom located below the fourth floor, including basements where applicable, shall be provided with an exterior window openable from the inside that can be used as a means of emergency egress.

3. Egress doors shall have minimum dimensions of 76 inches (193 cm) by 32 inches (81 cm). Egress windows shall have minimum dimensions of 24 inches (61 cm) by 20 inches (51 cm).

a. Where the second floor is the lowest floor level in a dwelling unit, a flat roof deck or platform will be permitted as a minimum for a secondary exit. The platform shall be provided with at least a 36-inch high, but no more than a 46-inch high guardrail above the platform floor. If the platform is serving more than one dwelling unit, except in a duplex situation, the guardrail shall be at least 42 inches above the platform floor. Existing guardrails on platforms shall be structurally sound, safe and constructed with at least 2 uniformly spaced intermediate rails. Guardrails shall be constructed to prevent the through-passage of a sphere with a diameter of 4 inches or larger. The platform, depending on the dwelling unit it serves, shall comply with regulations contained in Chapters SPS 320 through 325 or SPS 360-366, Wisconsin Administrative Code, and any amendments, revisions, or renumbering of same. The

floor of the platform or roof edge may not exceed an elevation of 15 feet above the grade below.

4. If a habitable room partly or totally below grade is intended for sleeping purposes, at least one exterior window shall be openable from the inside and accessible for easy and ready use as an emergency exit. The window shall have the following minimum dimensions: for multifamily dwellings, a net clear opening of 5.7 ft2 (0.53 m2); 24 inches (61 cm) from the top of the sill to the bottom of head of the window frame; a width of 20 inches (51 cm); and an opening height of not more than 44 inches (112 cm) from the floor. For single and two family houses, the window shall have a clear opening in either direction of 20 inches by 24 inches and a height of 46 inches or less from the floor to the window opening.

a. If the window opening sill height is below ground elevation, the horizontal dimension (width times projection) of the window well shall be at least nine ft^2 (0.84 m^2) and the horizontal projection shall extend at least 36 inches (91 cm) from the exterior side of the window.

b. If the egress window well is deeper than 44 inches (112 cm) for multifamily dwellings and 46 inches (117 cm) for one and two family dwellings, below ground elevation, there shall be steps or a ladder permanently attached to serve as an emergency exit to ground elevation. The distance between steps or rungs shall be not more than 18 inches (46 cm), their width shall be at least 12 inches (31 cm), and their projection from the wall shall be between3and 6 inches (7.6 and 15 cm).

c. In multifamily dwellings, a door leading directly from the room to the outside that provides an exit at grade level shall fulfill this requirement. In one and two family dwellings, a door in an adjacent room which is used as a common space, like a living room with a walkout, would satisfy the requirements or the second exit provided there was also a stairway leading to the first floor.

B. Locks/Security. Means of egress (i.e., windows and/or doors) from dwellings shall have locks.

1. Following each change in tenancy, reasonable precautions shall be taken to control means of entry to minimize prior tenant access. If keys are provided, they shall be provided to each person named on the lease.

2. Dwelling unit entry doors shall be equipped with a dead bolt lock with a minimum throw of one inch (2.54 cm) and that is capable of being opened from the interior side without a key.

3. Exterior doors on multifamily buildings with a common entry that leads into a foyer or hallway shall have a self-closing mechanism and shall be equipped with a locking device capable of being opened from the interior side without a key. Manually operated flush bolts or surface bolts are not permitted.

4. Exterior windows that are capable of being opened and are potential means of entry shall be equipped with a lock on the interior side.

5. Hasp-type or hasp-like locks are prohibited on bedroom doors.

C. Smoke Alarm. Every dwelling unit shall have a functioning smoke alarm, installed per the manufacturer's listing, outside each sleeping area in the immediate vicinity of the bedrooms, in each additional room used for sleeping purposes, and on every level except crawlspaces and uninhabitable attics. In dwellings or dwelling units with split levels that have no door between adjacent levels, the smoke alarm installed on the upper level shall suffice for the adjacent lower level. In the event a smoke alarm sounds, the cause of the alarm condition shall be identified and corrected.

1. In multifamily housing, a tamper-proof smoke detection system (interconnected with a central fire alarm system) or stand-alone smoke alarms in good working condition shall be installed on each level including basements, in heating system and storage rooms, in garages, and in other common areas.

2. Battery-operated smoke alarms and the battery backup for hardwired smoke alarms shall be powered with long-lasting batteries.

D. Fire extinguishers shall be rated Class ABC and shall be readily accessible.

1. In multifamily housing, there shall be fire extinguishers in common areas on each floor and in areas where flammable or combustible liquids are stored, used, or dispensed. The fire extinguishers shall be located in conspicuous, unobstructed locations that are not obscured from view.

E. Carbon Monoxide Alarm. Every dwelling unit with a fuel fired appliance or an attached garage where motor vehicles are stored shall have at least one functioning carbon monoxide (CO) alarm on every habitable floor and outside each separate sleeping area, in the immediate vicinity of every bedroom. In the event a CO alarm sounds, the cause of the alarm condition shall be identified and corrected.

1. CO alarms powered by home electrical system shall have battery backup.

F. Every interior and exterior stairway, ramp, deck, porch, and balcony shall be maintained structurally sound, in good repair, properly anchored, and capable of supporting the imposed loads.

1. Treads on exterior stairways shall have nonskid surfaces.

2. Handrails and guardrails are required as follows:

a. Stairs with more than 3 risers shall be provided with at least 1 structurally sound and safe handrail for the full length of the stairs for each open side. Handrails on the open side of the stair shall provide at least one intermediate rail at mid height or equivalent. Handrails on the open side of the stair shall be constructed to prevent the through-passage of a sphere with a diameter of 4 inches or

larger and shall comply with Chapters SPS 321 or SPS 360-366, Wisconsin Administrative Code, or any amendments, revisions, or renumbering of same.

b. All openings between floors and open sides of landings, platforms, balconies or porches that are more than 30 inches above grade in multifamily dwellings and 24 inches above grade in one and two family dwellings shall be protected with guardrails.

3. Every interior and exterior stairway shall have uniform risers and treads. In multifamily dwellings, risers shall be no higher than 7¾ inches (19.6 cm) and treads shall be at least 10 inches (25.4 cm) deep, unless the existing space and construction do not allow a reduction in pitch or slope. In one and two family dwellings, risers shall be no higher than 8 inches (20.3 cm) and treads shall be at least 9 inches (22.8 cm) deep.

G. Guards.

1. In multifamily dwellings, every porch, patio, landing, and/or balcony located more than 30 inches (76.2 cm) above an adjacent area shall have a structurally sound guard 42 inches (106.7 cm) high. In individual dwelling units, where a guard on the open side of a stairway also serves as the handrail, the guard must be between 34 inches (86.4 cm) and 38 inches (96.5 cm) measured to the top of the railing measured vertically from the floor. The guard shall be firmly fastened, capable of supporting normally imposed loads, capable of being opened in case of emergency, and in good condition. Balusters shall be able to withstand a normal uniform load of 50 pounds per square foot and shall be placed at intervals that do not allow passage of a sphere greater than four (10.2 cm) inches in diameter. If the balusters do not reach the floor, the narrowest opening between the bottom of the stair guard and the floor shall be a maximum of four inches (10.2 cm).

2. In multifamily dwellings, if the vertical distance from the top of the sill of an exterior window opening to the finished grade or other surface below is greater than 72 inches (183 cm), and the vertical distance from the top of the sill to the floor of the room is less than 24 inches (60.9 cm), the window shall have a fall prevention device compliant with ASTM F2006 or ASTM F2090.

a. The fall prevention device for a window that provides access to a fire escape or is otherwise designated for emergency egress shall be compliant with ASTM F2090.

H. Chemical Storage.

1. Each dwelling unit shall have a cabinet or other storage space that is lockable or not readily accessible to children for the storage of medicine and household chemical agents.

2. Storage space for flammable and combustible liquids shall be available either in a building separate from the dwelling's habitable space or in an adjacent space that is not connected to the dwelling's ventilation system.

16.08.100 Lighting and Electrical Systems. A. Electrical System. Every dwelling unit shall have electric service, outlets, and fixtures that are grounded and installed properly, maintained in good and safe working condition, and connected to a source of electric power.

1. Every dwelling unit shall be supplied with a three-wire, 120/240-volt, single-phase electrical service that is not shared with another dwelling unit.

2. Temporary wiring or extension cords shall not be used in place of permanent wiring for more than 90 days.

B. Outlets. Every dwelling unit shall be supplied with electrical service, wiring, outlets and fixtures which shall be properly installed and shall be maintained in good and safe working condition. The following requirements shall be applicable to all dwelling units:

1. Every bathroom, bedroom, water closet compartment, kitchen, dining room, living room, laundry room, furnace room, hall, stairway and exterior entrance shall have at least one approved wall or ceiling light fixture capable of providing no less than 5 foot-candles at floor level in the center of the room. A switched outlet may be substituted for a light fixture in bedrooms, living rooms and dining rooms.

2. A minimum number of separate duplex-type receptacle outlets, separated by a reasonable distance, shall be provided as follows:

a. Kitchen and living room--three each room with at least one outlet serving the food preparation area.

b. Bedrooms--one duplex outlet per occupant of the bedroom, with a minimum of two outlets per bedroom.

c. Every bathroom shall have one approved ground fault type duplex outlet.

d. Every habitable room not listed in a. and b. shall have at least two separate duplex convenience outlets; or one such duplex convenience outlet and one supplied ceiling or wall light fixture.

e. All outlets that may be used for electric appliances that are not major electric appliances, and are located within 6 feet of sinks, lavatories, showers or bathtubs, shall be an approved ground fault type.

3. Branch circuits shall be protected by circuit breakers, or by S-type or equivalent safety

type, tamper proof fuses not to exceed the amp capacity of the smallest wire in the circuit.

4. No duplex electric convenience outlet shall serve more than two fixtures or appliances.

C. Natural Lighting. Every habitable room shall receive daylight from at least one exterior window or skylight. A. Every habitable room shall have at least one window or skylight facing directly to the outdoors. The minimum total window or skylight area, measured between stops, for every habitable room shall be eight percent of the floor area of such room. Minimum total area may be replaced with adequate ventilation and artificial lighting with Health Department approval.

1. If a habitable room receives daylight from an adjacent room or area used seasonally, such as a porch, the daylight through this interconnection shall be available year-round.

2. Every bathroom and kitchen shall comply with the daylight requirement for habitable rooms contained in this section, unless the room is equipped with a ventilation system consistent with Section 16.08.110.

D. Artificial Lighting. Each room containing a toilet, sink, bathtub, or shower stall shall contain at least one ceiling- or wall-type electric lighting fixture. Each non-habitable room, including laundry rooms, furnace rooms, and public halls, shall contain at least one ceiling- or wall-type electric lighting fixture. Each habitable room shall contain at least one ceiling- or wall-type electric lighting fixture or a switched outlet.

1. Light switches that control ceiling- or wall-type electric light fixtures shall be located conveniently for safe use.

2. Every public hall, exterior entry door, and stairway in multifamily housing shall be illuminated at all times by ceiling- or wall-type electric lighting fixtures providing a minimum of 1 foot-candle (11 lux) at the walking surface along the means of egress

3. In a building containing one or two dwelling units, every public hall, exterior entry door, and stairway shall be illuminated by ceiling- or wall-type electric lighting fixtures providing 1 foot-candle at the walking surface along the means of egress. (Ord. 7221, 2017; Ord. 5766 §6, 1997; Ord. 4622 §3, 1986; Ord. 4409, §§6 and 7, 1983; Ord. 3532 §4, 1975; Ord. 3116 §I(part), 1970; prior code §§1104--1104.08).

16.08.110 Thermal Comfort, Ventilation, and Energy Efficiency. A. Heating, Ventilation, and Air Conditioning Systems. Facilities for heating, cooling, ventilation, and humidity control shall be maintained in good working condition and operated when necessary for the health and comfort of the occupants and in accordance with the design capacity of the installed equipment. Within 48 hours after equipment has become inoperative due to a mechanical problem or power failure other than a utility outage, an alternative safe source of necessary heating, ventilating, or cooling shall be provided.

B. Heating System. Every dwelling shall have a properly installed heating system in good and safe working condition that is capable of safely and adequately heating all habitable rooms, bathrooms, and toilet rooms. The heating system, filtration components, distribution components, heating elements, and cooling elements (if provided), shall be sealed, cleaned, maintained, and operated in accordance with manufacturer specifications and shall be inspected annually

1. Venting and Air Supply for Heating Equipment. Furnaces, water heaters, wood stoves, and other devices that employ combustion-burning fuel shall be vented to the outside of the structure in an approved manner that meets manufacturer specifications and is in compliance with applicable codes and standards and shall be supplied with sufficient air to support the continuous complete combustion of fuel and prevent backdrafting.

2. Minimum Heat Temperature. The heating system shall be capable of maintaining a minimum room temperature of 68° F (20° C) in every habitable room, bathroom, and toilet room.

3. Heating Supply. If the dwelling unit is rented, leased, or let on terms either expressed or implied that heat will be supplied, heat shall be provided to maintain a minimum temperature of 68° F (20° C) in habitable rooms, bathrooms, and toilet rooms.

4. Forced-Air Systems. Any dwelling with a forced-air system shall have at least one thermostat within each dwelling unit capable of controlling the heating system, and cooling system if provided, to maintain temperature set point between 55° F (13° C) and 85° F (29° C) at different times of the day. The system shall have a clean air filter installed in accordance with manufacturer specifications at each change in tenancy and at least annually. This filter shall have a minimum efficiency reporting value of eight (MERV-8) unless the system is not equipped to use a MERV-8 filter.

5. Steam and Hot Water Systems. In dwellings with heating equipment utilizing steam or hot water with a temperature of 110° F (43° C) or greater, protective covers/barriers shall be installed on and maintained for exposed surfaces of baseboard units, radiators, and piping between radiators.

6. Wood Stoves. A wood stove manufactured after June, 1988 shall have a manufacturer's label certifying compliance with the emission standard at 40 C.F.R. § 60 part AAA. Clearance of 30 inches (76 cm) shall be maintained between combustible materials and a stove with no heat shield. Where a heat shield is present, the clearance between combustible materials and the stove

shall be compliant with manufacturer specification for the heat shield.

7. Any new combustion heating equipment installed in occupied or conditioned spaces shall be power-vented or sealed (direct-vented) combustion equipment.

C. Ventilation. Natural or mechanical ventilation, shall deliver fresh air to every habitable room and bathroom and be capable of removing moisture-laden air and other contaminants generated during cooking, bathing, and showering.

1. Natural ventilation shall be provided to each habitable room by means of openable doors, skylights, or windows. The net area of the openable doors, skylights, or windows shall be 3.5% of the floor area of the habitable room.

2. Every dwelling shall have a ventilation system compliant with ASHRAE Standard 62.2 (Ventilation and Acceptable Indoor Air Quality in Low-Rise Residential Buildings) or ASHRAE 62.1 (Ventilation for Acceptable Indoor Air Quality) as applicable to the dwelling.

3. The air exhausted from a bathroom, toilet room, kitchen, clothes dryer, or basement shall not be vented into any other parts of the building's habitable space or an attic; such air shall discharge directly to the outdoors but not near any intake on the building exterior.

a. The exhaust vent from a clothes dryer shall consist of a rigid or corrugated semi-rigid metal duct. The exhaust vent and surrounding areas shall be clear of lint accumulation.

4. Pipes, ducts, conductors, fans, and blowers shall not discharge gases, steam, vapor, hot air, grease, smoke, odors, or other gaseous or particulate wastes directly upon abutting or adjacent public or private property or that of another occupant. Vent pipe openings and any pest-proofing screens that cover them shall be maintained free of debris. Screens are not permitted on dryer exhaust.

D. Air Sealing. Openings into dwellings and dwelling units shall be sealed to limit uncontrolled air movement.

1. Exterior doors, windows and skylights, openings where siding and chimneys meet, utility penetrations, electrical outlets, and other openings shall be weathertight.

a. Pads, door sweeps, weather stripping, and seals shall be used and maintained in good repair to minimize air leaks.

2. Openings separating an attached garage from a habitable room, including doors, ceilings, floors, and utility and ductwork penetrations, shall be sealed.

a. Any doorway between a habitable room and a garage shall be equipped with a 20-minute fire-rated door and frame assembly.

b. There shall be no door, window, or other opening from a garage into a room used for sleeping purposes.

3. Heating and air conditioning system ductwork and air handling units located in an attached garage shall be correctly insulated and sealed.

a. There shall be no supply or return vent openings in a garage that connect to air handlers serving habitable spaces.

4. In a multifamily building, walls, ceilings, and floors that separate a dwelling unit from neighboring units, corridors, chases, stairwells, and other openings shall be sealed. (Ord. 7221, 2017; Ord. 6133 §3, 2001; Ord. 5766 §8, 1997; Ord. 4803, 1988; Ord. 4409 §8, 1983; Ord. 3116 §I(part), 1970; prior code §§1106--1106.07).

16.08.120 Moisture Control, Solid Waste, and Pest Management. A. Moisture Prevention and Control. Every foundation, roof, roofing component, exterior wall, door, skylight, and window shall be watertight, weathertight, free of persistent dampness or moisture, and in good condition.

1. The building's drainage system, such as footing or foundation drains, gutters, downspouts, rainwater collection containers, or other elements, shall direct water away from the structure.

2. Exterior wood surfaces shall be protected from the elements and decay by paint or other protective treatment or be naturally decay resistant.

3. Premises shall be graded and maintained to prevent the erosion of soil and to prevent the accumulation of water on the premises, within a crawlspace, or within the structure.

4. Interior and exterior surfaces and surface coverings, such as but not limited to carpet, wood, cellulose insulation, and paper, paint, and other wall coverings, including paper-faced gypsum board, shall have no signs of visible mold growth or chronic or persistent excessive dampness or moisture.

5. Building material that is discolored or deteriorated by mold or mildew or causes a moldy or earthy odor shall be cleaned, dried, and repaired. Structurally unsound material shall be removed and replaced.

6. The underlying cause of excessive dampness or moisture, or moldy or earthy odor shall be investigated and corrected.

7. Cold HVAC and plumbing components and systems (e.g., chilled-water pipes and valves, refrigerant piping, and valves) in readily accessible locations shall be sufficiently and continuously

insulated to keep the temperature of their surfaces at least 10°F (4°C) above the dew point of the surrounding air.

8. Unless the crawl space is sealed and insulated from the outdoors, the crawl space shall be free of high moisture conditions or be separated from the dwelling by an air seal or other method suitable to the climate and conditions.

9. If installed, humidifiers and dehumidifiers shall be sized, installed, and controlled so they do not overload the air with humidity, which increases the risk of condensation inside air distribution systems and exterior walls and roofing assemblies.

B. Solid Waste. Every dwelling shall have adequate facilities for temporary storage of trash and recyclable materials.

1. There shall be trash containers outside the dwelling for the storage of trash awaiting collection or disposal. The total capacity of these facilities shall be sufficient to store occupants' trash between scheduled collection times, and shall be placed on a cleanable surface constructed to minimize spillage.

2. There shall be containers outside the dwelling for recyclable materials awaiting collection, with capacity sufficient to store occupants' recyclable materials between scheduled collection times.

C. Integrated pest management (IPM) methods shall be used to maintain every dwelling free of infestation, openings that allow pest entry, conditions that harbor pests or provide them with food or water, and visible pest residue or debris.

1. A pest management professional who has an IPM certification or a person trained in IPM shall develop the IPM program for a multifamily building.

2. Every dwelling, premise, accessory structure, and fence shall be maintained in good repair, free of pest infestation, and inspected for pests and building conditions that attract and support pests.

a. There shall be no accumulation of trash, paper, boxes, lumber, scrap metal, food, or other materials that support rodent harborage in or about any dwelling or premises. Stored materials shall be placed in boxes or stacked in stable piles elevated at least six inches (152 mm) above the ground or floor and at least six inches (152 mm) from the walls. Stored materials shall not block any egress routes.

b. There shall be no accumulation of water in or about any dwelling or premises.

3. Every openable window and storm door shall be supplied with adequate 16-guage screens to prevent the entry of pests.

4. There shall be no holes or open joints in exterior walls, foundations, slabs, floors, or roofs that equal or exceed 1/8th inch (3 mm).

a. The areas surrounding windows, doors, pipes, drains, wires, conduits, vents, and other openings that penetrate exterior walls shall be sealed with low-VOC caulk or closed-cell insulation.

5. Pest infestation and the underlying cause shall be eliminated using control methods consistent with IPM, such as exclusion, sanitation, and least-risk pesticides scaled to and designed for the targeted infestation.

a. Foggers and organic phosphates shall not be used to control or eliminate pests. (Ord. 7221, 2017; Ord. 5766 §9, 1997; Ord. 4667 §3, 1986; Ord. 4426, 1983; Ord. 4409 §§10, 11, 1983; Ord. 3532 §§5--9, 1975; Ord. 3158 §IB, 1970; Ord. 3116 §I(part), 1970; prior code §§1107--1107.10).

16.08.130 Chemical and Radiological Agents. A. General Requirements. All chemical and radiological agents in dwellings, premises, and accessory structures, including but not limited to deteriorated lead-based paint, friable asbestos-containing material, formaldehyde, volatile organic compounds, radon, pesticides, and methamphetamine, shall be contained, stored, removed, or mitigated in a safe and healthy manner consistent with federal, state, and local laws and regulations.

B. Lead-Based Paint.

1. Lead levels at or above federal regulatory limits pursuant to 40 C.F.R. § 745.65 or any amendments, revisions, or renumbering of this regulation or state regulatory requirements pursuant to DHS 163 or any amendments, revisions, or renumbering of this section, are deemed hazardous.

2. Painted surfaces shall be maintained intact. Deteriorated paint at a property built before 1978 shall be repaired in accordance with the renovation requirements of DHS 163 or any amendments, revisions, or renumbering of this section, and the underlying cause of the deterioration shall be corrected.

3. All renovation, repair, and painting work that disturb a painted surface in a pre-1978 dwelling shall be performed in accordance with the renovation requirements of DHS 163 or any amendments, revisions, or renumbering of this section, unless the paint has been tested and found not to contain lead-based paint in accordance with DHS 163 or any amendments, revisions, or renumbering of

this section.

4. With the exception of paint that is tested and found not to contain lead-based paint in accordance DHS 163, a painted surface shall not be disturbed using methods that involve:

a. open-flame burning or torching or operating a heat gun at temperatures above a maximum of 1,100° F (593° C); or

b. power sanding, grinding, power planing, needle gun, abrasive blasting, or sandblasting unless such machines have shrouds or containment systems and a High-Efficiency Particulate Air (HEPA) vacuum attachment that collects dust and debris at the point of generation. The shroud or containment system shall release no visible dust or air outside the shroud or containment system.

5. Lead-based paint shall not be applied to the interior or exterior surface of any dwelling or dwelling unit.

C. Lead Hazard Inspection and Abatement.

1. The department may conduct an inspection of a dwelling, dwelling unit, accessory structure, premise, surface, substance or object which the department has reason to believe may be a lead hazard or may exceed the allowable lead levels. The department may remove samples or objects necessary for laboratory analysis to determine the presence of a lead hazard in the dwelling or premise.

2. If the department determines that a lead hazard exists on the premises, the department shall do any or all of the following:

a. Cause to be posted in a conspicuous place upon the dwelling or premises a notice of the presence of a lead hazard.

b. Notify the occupant of the dwelling or premises, or that person's representative, that a lead hazard is present on or in the dwelling or premises and may constitute a health hazard.

c. Issue an order to the occupant and/or owner that requires any or all of the following:

i. Interim control of lead hazards.
ii. Lead hazard reduction.
iii. Lead hazard abatement.
iv. Vacating the dwelling or dwelling unit due to the presence of an imminent lead hazard.
v. Abatement of a lead hazard by a state of Wisconsin certified lead worker and lead supervisor, when required by state law.
vi. Clearance testing activities to determine if a lead hazard has been eliminated.

D. Asbestos. Every owner shall maintain in good repair all asbestos-containing material on the premises. All asbestos-containing material shall be maintained non-friable and free from any defects such as holes, cracks, tears, and/or looseness that may allow the release of fibers into the environment.

1. Where asbestos-containing materials are used to insulate pipes and/or boilers, the phrase "caution asbestos" shall be painted or otherwise affixed on the boiler and on at least one of the insulated pipes in letters not less than one inch in height, in contrasting colors with the background material and be easily visible.

E. Asbestos Inspection and Abatement. In every inspection of a dwelling, dwelling unit conducted by the department he or she may inspect for the presence of asbestos-containing material and remove samples necessary for laboratory analysis. Where asbestos-containing material is found to be present in such condition or is being handled in a manner that asbestos fibers are or may be released to the adjacent environment creating a human health hazard, the asbestos-containing material shall be removed or repaired. Removal, repair and disposal of friable or non-friable asbestos shall be done in a manner that does not cause a human health hazard.

1. Plans detailing corrective procedures to comply with health department orders regarding asbestos abatement shall be submitted to the health department prior to initiating the corrective measures. These plans shall include information such as, but not limited to, the following:

a. Information regarding the facility where abatement is to be completed.
b. Name of owner(s) of the facility where abatement is to be completed.
c. Dates of the asbestos abatement project.
d. Description of abatement methods to be used.
e. Description of wetting agents, encapsulants and sealants to be used.
f. Description of negative air system to be used.
g. Description of waste handling procedures.
h. Description of final air clearance sampling and testing methods to be used.

2. Removal, repair and disposal of friable asbestos containing material from any residential dwelling unit shall be performed by a person properly certified by the state of Wisconsin to conduct asbestos abatement, except where an uncertified person is able to demonstrate to the

department that he or she possesses acceptable knowledge and resources to safely repair or remove friable asbestos, such person may perform repair or removal within a total of twenty-five lineal feet or ten square feet in area.

3. Air testing with a final clearance level of less than 0.01 fiber per cubic centimeter of air may be required to comply with department orders regarding friable asbestos abatement projects. Air testing shall be done as follows:

a. By a person qualified to conduct asbestos air testing.

b. At least one sample per containment area shall be obtained.

c. Utilizing aggressive air sampling techniques such as with a leaf blower or fan.

d. Samples shall be analyzed by a qualified laboratory using phase contrast or other EPA-approved method.

F. Toxic Substances in Manufactured Building Materials.

1. Building materials consisting of hardwood plywood, medium-density fiberboard, and particleboard as defined by 15 U.S.C. 2697(b)(2) or any amendments, revisions, or renumbering of this section shall not be used in maintenance and renovations within dwellings, unless the materials have been certified to meet the formaldehyde emission standards of 15 U.S.C. 2697(b)(2) or any amendments, revisions, or renumbering of this section:

a. Hardwood plywood with a veneer core, 0.05 parts per million (ppm);

b. Hardwood plywood with a composite core, 0.05 ppm;

c. Medium-density fiberboard, 0.09 ppm;

d. Thin medium-density fiberboard, 0.11 ppm; and

e. Particleboard, 0.08 ppm.

2. Building materials used in maintenance and renovations, including but not limited to paints, coatings, primers, glues, resins, adhesives, and floor coverings, shall be certified as having no volatile organic chemicals (VOCs) or low VOC emissions, and having no halogenated flame retardants (HFRs).

G. Radon. If tested, radon present at levels at or above the EPA action level of four picocuries radon per liter of air (pCi/L) in the lowest habitable level of the dwelling shall be deemed hazardous.

1. Radon levels shall be determined by an approved testing method.

2. Mitigation of radon levels exceeding four pCi/L shall be performed by a professional certified by a national private-sector radon proficiency program.

H. Pesticides shall only be used in accordance with IPM methods discussed in Section 16.08.120(C).

1. Pesticides shall be applied only in areas and at concentrations which comply with manufacturer specifications. When it is determined by an approved method that a hazardous amount of a pesticide has been applied in a location or at a concentration contrary to manufacturer specifications, the hazard shall be immediately mitigated.

2. Pesticides shall be stored and disposed in accordance with manufacturer specifications.

I. Methamphetamine. A dwelling that has been used for methamphetamine manufacture shall be vacated until deemed safe by an approved testing method.

J. Smoke in Multifamily Housing.

1. Smoking shall be prohibited in all indoor common areas of multifamily buildings.

2. Smoking shall be prohibited in exterior areas less than 25 feet (762 cm) from building entrances, outdoor air intakes, and operable windows to prevent smoke from entering enclosed areas in which smoking is prohibited. (Ord. 7221, 2017; Ord. 6580 §1, 2005; Ord. 6580 §1, 2005; Ord. 5766 §10, 1997; Ord. 4906 §1, 1989; Ord. 3116 §I(part), 1970; Prior code §§1108-1108.07).

16.08.140 Housing Appearance. A. Foundations, Exterior Walls, and Roofs. No person shall occupy as owner-occupant or let to another for occupancy any dwelling or dwelling unit, for the purpose of living therein, or own or be in control of any vacant dwelling or dwelling unit, which does not comply with the following requirements:

1. Every exterior wall, eave, soffit, trim and similar surface shall be free of deterioration, holes, breaks, and loose or rotting boards or timbers.

2. Structures that require paint or stain, or that have been painted or stained, should have paint or stain applied at regular intervals to exterior building surfaces. When the building has more than thirty percent deterioration of its finished surface on any wall, that wall shall be painted or stained.

3. All cornices, moldings, lintels, sills, oriel windows, and similar projections shall be kept in reasonably good repair and free from cracks and defects which make them hazardous or unsightly.

4. Roof surfaces shall be tight and have no defects which admit water. All roof drainage systems shall be secured, hung properly, and in reasonably good repair.

5. Chimneys, antennas, air vents, and other similar projections shall be structurally sound and in reasonably good repair. Such projections shall be secured properly, where applicable, to an exterior wall or exterior roof.

B. Grading and Drainage of Lots. Every yard, vent passageway, driveway, and other portion of the lot on which the dwelling stands shall be graded and drained so as to prevent the accumulation of water on any such surface or on adjacent property. Driveways shall be maintained in reasonably good repair.

C. Accessory Structures. All accessory structures shall be maintained in a state of reasonably good repair and vertical alignment. All exterior appurtenances or accessory structures which serve no useful purpose and are in a deteriorated condition, which are not economically repairable, shall be removed. Such structures include, but shall not be limited to, porches, terraces, entrance platforms, garages, driveways, carports, walls, fences and miscellaneous sheds.

D. Abandoned Dwellings. The owner of any abandoned dwelling or his or her authorized agent shall:

1. Cause all services and utilities to be disconnected from or discontinued to said dwelling;

2. Lock all exterior doors and windows of said dwelling;

3. Maintain such dwelling so that its foundation, floors, windows, walls, doors, ceilings, roof, porches and stairs shall be reasonably weathertight, waterproof, rodentproof, structurally sound, and in reasonably good repair such that they comply with section 16.08.165 B of this chapter; and

4. Maintain the yard and accessory structures such that they comply with section 16.08.165 C and D of this chapter.

E. Nuisances. The interior and exterior of vacant and abandoned dwellings and their premises shall be maintained in a nuisance-free condition.

16.08.150 Housing Inspectors Inspections and Duties. A. Housing inspectors are authorized and directed to make inspections pursuant to this chapter, applicable provisions of this title, or of applicable state or local rules or regulations adopted under or related thereto. Specifically, but without limitation, housing inspectors shall initiate inspections pursuant to the schedule for inspections in this chapter, in response to a complaint, has been committed, or when there is a valid reason to believe that a violation of this chapter, title, or of applicable state or local rules or regulations adopted under or related thereto has been committed. If violations are found to exist the procedure of enforcement stated in Sections 16.08.200 through 16.08.220 shall apply to such violations.

B. Housing inspectors are authorized to enter and inspect all residential dwellings subject to the provisions of this chapter and applicable law between the hours of 8 a.m. and 5 p.m. (except Sundays and holidays), for purposes authorized in sub A. above. Housing inspectors shall give the occupant not less than 24 hours' notice of the intent to inspect the premises and may then make the inspection only if he or she is given permission to do so. In the absence of such permission, he or she shall obtain a search warrant pursuant to Wis. Stat. 66.0119 before entering the premises.

1. If delay in inspection would pose a serious and imminent threat to human life, health or property, housing inspectors may enter the premises without such permission or notice and with or without a search warrant as the circumstances may prescribe pursuant to ss. 254.59. At any time, the 24 hour notice requirement may be waived by the occupant, or if there is none, the owner.

C. Housing inspectors are hereby authorized to lawfully enter and inspect the premises surrounding residential dwellings subject to this chapter for the purposes authorized in sub. A, above.

D. The owner, occupant or other person in charge of a residential dwelling unit subject to this chapter may agree to an inspection by appointment at a time other than the hours provided by this chapter, which if agreeable, shall authorize housing inspectors to inspect during such time.

16.08.160 Residential Rental Dwelling Unit Registration. A. All properties containing at least one residential rental dwelling unit must be registered annually with the city of Eau Claire by submitting a completed registration form, made available by the Department. The registration form must contain the following:

1. Name of the owner of each residential rental dwelling unit.

2. Name, address, and telephone number of authorized contact person for each residential rental dwelling unit.

B. Initial registration of properties containing at least one rental housing unit is due on or before January 1st, 2018, and annually thereafter on or before March 1st. Changes to the required registration information such as ownership or changes to the authorized contact person for each rental property must be submitted to the city of Eau Claire within 60 days of the change.

C. Residential rental dwelling unit owners must submit a registration fee per property established by the City Council as stated in the City of Eau Claire Fee and Licenses Schedule simultaneous to filing registration. (Ord. 7221, 2017; Charter Ord. 6935, 2010; Ord. 6721 §1, 2006; Ord. 6580 §2, 2005; Ord. 6363 §36, 2002; Ord. 6362 §2, 2002; Ord. 5766 §12, 1997; Ord. 5359 §1, 1993; Ord. 4986, 1989; Ord. 4771, 1987;

Ord. 4622 §4, 1986; Ord. 4598, 1985; Ord. 4362, 1983; Ord. 3951 §16, 1979; Ord. 3532 §§10, 11, 1975; Ord. 3382 §1, 1973; Ord. 3158 §I B, 1979; Ord. 3116 §I(part), 1970; Ord. 3116 §I(part), 1970; Prior code §1109; Prior code §1111--1111.14).

16.08.170 Regularly Scheduled Residential Inspection Program. A. As a reasonable and necessary means of realizing the purposes and objectives of this chapter, this regularly scheduled residential inspection program is initiated and made applicable to residential dwelling units within the city of Eau Claire.

B. Inspections.

1. All residential dwelling units that meet the criteria set forth by this section are subject to regularly scheduled, periodic inspection and as needed re-inspection as provided by this chapter.

2. The City of Eau Claire finds and declares the following criteria to be indicators of an elevated risk of health and safety concerns and code violations in all residential dwelling units. The City of Eau Claire finds and declares that a formula which utilizes these factors to determine which properties require a mandatory inspection is consistent with and meets the standards set forth in Wisconsin Statute Section 66.0119 governing the ability to obtain a special inspection warrant:

a. External housing defects identified as part of a periodic neighborhood external housing survey.

b. Number of complaints against a property owner that include verification or observation from Housing inspectors, City or Department staff, or comparable public agencies. Such verification shall be considered reliable for meeting the standards set forth in Wisconsin Statute Section 66.0119.

c. Buildings initially constructed over 40 years prior to the current calendar year.

d. Residential dwellings that contain residential rental units.

e. Any documented cases of retaliation, as defined in 16.08.180, or any documented cases of violations of Wisconsin Landlord-Tenant law by a property owner within the city of Eau Claire or with regard to a property within the City.

3. Violations identified during the residential dwelling unit inspection shall be abated within the time ordered to prevent re-inspections and associated re-inspection fees.

4. Inspection Fee. An owner of any residential dwelling unit inspected or re-inspected under this section shall pay an inspection or re-inspection fee established by the City Council as stated in the City of Eau Claire Fees and Licensing Schedule.

5. Non-exclusivity. None of the inspection provisions in this Chapter shall prohibit, condition, or otherwise limit any inspection conducted pursuant to this code or other applicable law.

6. Notice of Inspection.

a. The housing inspector shall serve written notice of the date and time of any inspection to be conducted under this Chapter, by mailing such notice by first class mail at least 21 calendar days prior to the date of inspection. The housing inspector shall mail the notice to the occupants of each residential dwelling unit, the owner, and the authorized contact person to the addresses provided on the registration application, as described in Section 16.08.160. In the case of multiple owners of the same property, notice to any one of the owners or the authorized contact person shall comply with the notice requirement under this section.

b. Should the tenant, owner, or authorized contact person of the owner of the residential rental dwelling unit refuse admittance to the department the City of Eau Claire staff may proceed to obtain a special inspection warrant pursuant to Wis. Stat. 66. 0119.

16.08.180 Retaliatory Eviction and Other Retaliation Prohibited. A. No person or tenant may be retaliated against for complaining against violations of the City Code of ordinances, City-County Board of Health regulations, or any state or local regulation related to landlord-tenant law or housing conditions.

B. Retaliation shall include, but not be limited to, eviction, inconsistent rent payment increases, failure to perform promised repairs, refusal to renew a lease or other harassment of the tenant committed by the landlord or his or her agents, or threatening any of the preceding. Any such acts shall be presumed to be retaliatory if committed within six months after the tenant has complained to any state or local investigatory or enforcement agency of violations of this chapter or other violations related to landlord-tenant law or housing conditions. In order to overcome the presumption that such acts are retaliatory, the landlord must show by a preponderance of evidence that such acts were based upon good cause.

16.08.185 Authorized Contact Person. Each owner of rental housing property shall designate an Authorized Contact Person with full authority to act on behalf of the owner for all purposes under this Chapter. The owner of the rental housing property may act as authorized contact person. All official notices served on the Authorized Contact Person shall be deemed to have been served on the owner.

16.08.190 Housing Advisory Board. A housing advisory board shall be recommended by the

advisory committee on appointments and appointed by the city council. The board shall consist of five members serving terms of three years. The appointed board members shall designate one of themselves as chair. The city council may appoint for a term of three years an alternate member of the board in addition to the five members, who shall act, with full power, only when a member of the board is unable to vote because of interest or when a member is absent. A designated representative of the city manager shall serve as staff liaison to the board. A quorum shall consist of three members present in person at any duly convened meeting. In all cases not less than three members must vote for a proposal for it to carry. All meetings, transactions and records of action of the housing advisory board shall be open to the public. The board shall adopt its rules and regulations for the transaction of business. Meetings shall be held at the call of the chair and at such times as the board may determine. In addition to the powers otherwise granted in this chapter, the board shall have the power of interpretation where ambiguity or doubt may exist in any application of this chapter.

The board, in exercising the power and authority granted by this chapter, shall act on specific appeals and applications only. In exercising its power of interpretation, the board may act upon application, upon written request from the city council, from the department, or upon its own motion. Such action shall not, however, change or have the effect of changing, any rule, regulation, provision, department policy or procedure, or restriction of this chapter, but shall affect only its application to specific cases before the board.

16.08.200 Enforcement--Notices, Orders and Hearings. A. Whenever a housing inspector determines that there are reasonable grounds to believe that there has been a violation of any provisions of this chapter or of any rule or regulation adopted pursuant thereto, they shall give notice of such alleged violation to the person or persons responsible. Such notice shall:

1. Be in writing;
2. Include a statement of the reasons why it is being issued;
3. Allow a reasonable time for the performance of any act it requires;
4. Be served upon the owner or his agent or authorized contact person, or the occupant, as the case may require by any method authorized or required under the laws of this state.

B. Any person who shall fail or neglect to comply with any lawful order of the department issued pursuant to the provisions of this chapter for any residential dwelling unit is subject to re-inspection and shall be assessed a fee established by the City Council and stated in the City of Eau Claire Fees and Licensing Schedule for each compliance re-inspection performed.

1. Any unpaid inspection or re-inspection fees shall be entered in the tax roll as a special charge against said lot or parcel of land, and the same shall be collected in all respects like other special charges upon real estate, as provided in s. 66.0627 of the Wisconsin Statutes.

C. Any person affected by any notice which has been issued in connection with the enforcement of any provisions of this chapter or any rule or regulation adopted pursuant thereto, may request and, if timely filed along with a filing fee established by the City Council and stated in the City of Eau Claire Fees and Licensing Schedule, shall be granted a hearing on the matter before the housing advisory board pursuant to Section 16.08.190 and the rules of procedure adopted by the board.

D. After such hearing the housing advisory board may sustain, modify or withdraw the notice, depending upon its finding as to whether the provision of this chapter and the rules and regulations adopted have been violated. The board shall be guided by a policy of reasonable compliance in order to promote the public health and may, at its discretion, permit exceptions to provisions of this chapter so long as such exceptions are not contrary to the spirit of the chapter as a whole.

E. The proceedings at such hearing, including the findings and decision of the housing advisory board shall be summarized, reduced to writing and entered as a matter of public record in the office of the City Clerk. Such record shall also include a copy of every notice or order issued in connection with the matter. Any person aggrieved by the decision of the housing advisory board may seek relief therefrom in any court of competent jurisdiction as provided by the laws of this state.

F. The notice, order, and hearing requirements for City of Eau Claire staff found in this chapter are considered directory not mandatory, and substantial compliance with these requirements by City of Eau Claire staff shall be considered compliance with these provisions. Additionally, if it can be demonstrated that an owner of property or the agent for an owner of property has constructive notice or actual knowledge of any required notice or order the City of Eau Claire, the City of Eau Claire will be considered to be in compliance with any requirements related to any required notice or order.

16.08.210 Unfit Dwellings--Condemnation Procedure. The designation of residential dwellings or dwelling units as unfit for human habitation and the procedure for the condemnation and placarding of such unfit residential dwellings or dwelling units shall be carried out in compliance with the following requirements:

A. Any residential dwelling or dwelling unit which shall be found to have any of the following

defects shall be condemned as unfit for human habitation and shall be so designated and placarded by the building inspector, fire inspector or a housing inspector:

1. One which is so damaged, decayed, dilapidated, unsanitary, unsafe, or vermin-infested that it creates a serious hazard to the health or safety of the occupants or of the public;

2. One which lacks illumination, ventilation, or sanitation facilities adequate to protect the health or safety of the occupants or of the public;

3. One which because of its general condition or location is unsanitary or otherwise dangerous, to the health or safety of the occupants or of the public.

B. Any dwelling or dwelling unit condemned as unfit for human habitation and so designated and placarded, shall be vacated within a reasonable time as stated on the placard or other order.

C. No residential dwelling or dwelling unit which has been condemned and placarded as unfit for human habitation shall again be used for human habitation until written approval is secured from, and such placard is removed by the City. The City shall remove such placard whenever the defect or defects upon which the condemnation and placarding action were based have been eliminated or abated to its satisfaction.

D. No person shall deface or remove the placard from any dwelling or dwelling unit which has been condemned as unfit for human habitation and placarded as such, except as provided in subsection C.

E. Any person affected by any notice or order relating to the condemning and placarding of a dwelling or dwelling unit as unfit for human habitation may request and shall be granted a hearing on the matter before the housing advisory board, under the procedure set forth in Section 16.08.150.

16.08.220 Violation--Penalty. Any person who violates any provision of this chapter, or any provision of any rules or regulation adopted by the department pursuant to authority granted by this chapter, shall, upon conviction thereof, forfeit not less than $60.00 or more than $1,000.00 together with the costs of prosecution, and every day of violation shall constitute a separate offense. On default of payment of such forfeiture, any person so convicted shall be confined in the county jail of Eau Claire County for a term of not less than one day and not more than sixty days.

16.08.230 Prevailing Regulations and Severability. A. In any case where a provision of this chapter is found to be in conflict with a provision of any zoning, building, fire, safety, or health ordinance or code of the City or existing on the effective date of the ordinance codified herein, the provision which established the higher standard for the promotion and protection of the health and safety of the people shall prevail. In any case, where a provision of this chapter is found to be in conflict with a provision of any other ordinance or code of the city existing on the effective date of the ordinance codified herein which establishes a lower standard for the promotion and protection of the health and safety of the people, the provisions of this chapter shall be deemed to prevail, and such other ordinances or codes are declared to be repealed to the extent that they may be found in conflict with this chapter.

B. If any section, provision or part of this Ordinance shall be adjudged invalid or unconstitutional, such adjudication shall not affect the validity of the Ordinance as a whole or any section, provision or part thereof not adjudicated invalid or unconstitutional. (Ord. 7221, 2017)

Chapter 16.12

MOBILE HOME CODE

Sections:

16.12.010 Purpose--Scope.
16.12.020 Definitions.
16.12.030 Community design.
16.12.040 Park license--Application procedure.
16.12.050 Park inspections.
16.12.060 Parks--General requirements.
16.12.070 Water supply and distribution system.
16.12.080 Sewage disposal system.
16.12.090 Solid waste disposal system.
16.12.100 Gas distribution system.
16.12.110 Fuel oil distribution system.
16.12.120 Service buildings--Community facilities.
16.12.130 Responsibilities of management.

16.12.140 Responsibilities of the resident.
16.12.150 Violations--Penalty.
16.12.160 License revocation or suspension.
16.12.170 Exceptions.

16.12.010 Purpose--Scope. A. The purpose of this code is to provide the minimum regulations, provisions and requirements in the city to insure public health, safety and the general welfare by regulating and controlling the location, design, quality and maintenance of mobile homes and mobile home parks.

B. The sections contained in this code shall be binding alike upon every owner of a mobile home, every lessee, and every person in charge or responsible for a mobile home or mobile home park.

C. This code shall apply to all mobile homes and mobile home parks unless stated otherwise. (Ord. 3246 §I(part), 1971; Prior code §15.70).

16.12.020 Definitions. Whenever used in this chapter, unless a different meaning appears from the context:

A. "Mobile home" means a structure, transportable in one or more sections, which is over 400 square feet in area excluding the hitch, built on a permanent chassis, and designed to be used as a dwelling, with or without permanent foundation, when connected to the required utilities, and includes the plumbing, heating, air conditioning and electrical systems contained in it. In computing square footage, "length" means the distance from the exterior of the front wall, that is, the wall nearest to the exterior of the drawbar and coupling mechanism, to the exterior of the rear wall at the opposite end of the home where the walls enclose living or other interior space, and that distance includes expandable rooms but not bay windows, porches, drawbars, couplings, hitches, wall and roof extensions, or other attachments. In this section, "width" means the distance from the exterior of one side wall to the exterior of the opposite side wall where the walls enclose living or other interior space, and that distance includes expandable rooms but not bay windows, porches, wall and roof extensions, or other attachments.

A mobile home should not be confused with a travel trailer which is towed by an automobile, can be operated independently of utility connections, is limited in width to eight feet, in length to forty-five feet, and is designed to be used primarily as a temporary vacation dwelling.

B. "Dependent mobile home" means a mobile home which does not have complete bathroom facilities.

C. "Non-dependent mobile home" means a mobile home equipped with complete bath and toilet facilities, all furniture, cooking, heating, appliances and complete year-round facilities.

D. "Mobile home park" means a parcel of land which is owned by an individual, a firm, trust, partnership, public or private association or corporation, and has been developed for rental of lots and provision of facilities and services to tenants with mobile homes.

E. "Mobile home stand" means that part of a parcel of land (mobile home site) in a mobile home park which has been reserved for the placement of one mobile home unit and shall include all attachments and additions to such mobile home.

F. "Common area" means any area or space designed for joint use of tenants occupying the mobile home park.

G. "Accessory structure" means all structures constructed and used apart from the mobile home and shall include awnings, cabanas, storage cabinets (or sheds), carports, windbreaks, attached porches and garages.

H. "License" means a written license or certification issued by the city permitting the construction, alteration and extension of a mobile home park under the provision of the zoning ordinance of the city and regulations issued hereunder.

I. "Licensee" means any person licensed to operate and maintain a mobile home park.

J. "Power supply assembly" means the conductors, including the grounding conductors, insulated from one another, the connectors, attachment plug caps, and all other fittings, grommets or devices installed for the purpose of delivering energy from the service equipment to the distribution panel within the mobile home or sectional home.

K. "Sewer connection" means a connection consisting of all pipes, fittings and appurtenances from the drain outlet of the mobile home to the inlet of the corresponding sewer riser pipe of the sewerage system serving the mobile home park.

L. "Sewer riser pipe" means that portion of the sewer lateral which extends vertically to the ground elevation and terminates at each mobile home stand.

M. "Water connection" means a connection consisting of all pipes, fittings and appurtenances from the water riser pipe to the water inlet pipe of the distribution system within the mobile home.

N. "Water riser pipe" means that portion of the water supply system serving the mobile home park which extends vertically to the ground elevation and terminates at a designated point at each mobile home stand.

O. "Enforcing agency" means the health authority, zoning administrator, building inspector, fire inspector or any other agencies of the city charged by law with the duty to enforce the provisions of this chapter.

P. "Open space distance" means the minimum open space distance away from a mobile home stand at any point. It is measured perpendicular to each stand line at any point. Required distances are defined in sections 18.13.030 and 18.13.060.

Q. "Mobile homesite" means a parcel of land in a mobile home park which has been reserved for the placement of one mobile home stand. (Ord. 5280 §1, 1992; Ord. 3246 §I(part), 1971; Prior code §15.72).

16.12.030 Community design. A. The general pattern of development shall fit topography, requirements for circulation, and requirements for provision of community facilities and utilities. Areas for churches, schools, major parks and community facilities should be located appropriately with respect to the population to be served and the street and walkway nets. As appropriate, residential areas should merge into or be insulated from areas devoted to other purposes. They should be insulated from heavy traffic, concentrations of parking, noise, lights, commercial and industrial activities. They should merge with parks and other suitable open areas.

B. The street pattern should serve, not shape, the lots in their small neighborhood groupings. Land devoted to streets should be held to a minimum compatible with performance of street-related functions. Minor streets should discourage use by through traffic, and no single minor street should serve so many homes that local traffic is likely to become a problem. Minor streets should feed at well-spaced intervals and well-designed intersections into collector streets and arteries for fast moving traffic. Neither collector nor arterial streets should have direct entrances from residential lots.

C. Blocks should be oriented generally with the long axis in the direction of principal automotive and pedestrian movement. Blocks should be large enough and wide enough to provide desirable lot depths plus interior walkways, commons, and easements for such utilities as are to be located within the block.

D. The mobile home park should be set in its own environment, rather than merely running into surrounding uses. It is desirable that it be bordered in a manner which insulates it from surrounding uses and sets it apart as a community.

E. These standards shall apply to all mobile home parks. Likewise, it will be necessary to obtain the approval of the plan commission and the city council for the location and design of any mobile home park on the basis of its compliance with these standards. (Ord. 3246 §I(part), 1971; Prior code §15.71).

16.12.040 Park license--Application procedure. A. It is unlawful for any person to construct, maintain, operate, alter, or extend any mobile home park within the limits of the city unless he or she holds a valid license issued by the city clerk in the name of such person for the specific construction, alteration or extension proposed.

B. All applications for a license shall be filed with the city clerk, reviewed by the plan commission and shall contain the following:

1. Name and address of applicant;
2. Location and legal description of the mobile home park;
3. Complete plans and specifications prepared by a registered engineer of the proposed park showing, but not limited to, the following:
   a. The area and dimensions of the tract of land,
   b. The number and location of all mobile home sites, stands, and the location of common areas, setback lines,
   c. The location and width of roadways and walkways,
   d. Plans and specifications of all utilities including sewage collection and disposal, storm water drainage, water distribution and supply, refuse storage and collection, lighting, electrical, telephone and TV antenna systems, off-street parking,
   e. Landscaping plans for the entire park, including a planting plan for the buffer strip,
   f. Plans, specifications and site plans of all buildings to be located within the park,
   g. Such other plans and specifications and information as may reasonably be required by the enforcing agency.

C. No license shall be issued for a mobile home park established after the effective date of this ordinance (August 14, 1983) unless said development shall contain a minimum of fifteen acres, but not to exceed fifty acres. A mobile home park existing on the effective date of this ordinance (August 14, 1983) may be expanded even if such expansion results in a mobile home park of less than 15 acres in size, provided the expanded portion complies with this chapter and all other applicable provisions of the code of ordinances, and further provided that no such park shall exceed 50 acres in size.

D. Application for new or renewable licenses shall be accompanied by a fee as stated in the City of Eau Claire Fees and Licenses Schedule for each space in the existing or proposed park, together with a surety bond of two thousand dollars for parks with less than 100 mobile home units and three thousand dollars

for parks with 100 or more mobile home units as a guarantee of the collection by the licensee of the monthly parking fees of the mobile home occupants and payment of such to the city treasurer. There shall be a fee as stated in the City of Eau Claire Fees and Licenses Schedule for the transfer of a license. Such parks shall comply with Wisconsin Administrative Code HSS 177.

E. Applications for renewal of licenses shall contain any change in the information submitted since the original license was issued, or the latest renewal granted.

F. Licensees of mobile home parks and owners of land on which are parked any mobile homes shall furnish information to the city clerk and city assessor on such homes added to their park, within five days after arrival of such home, on forms prescribed by the Wisconsin Department of Revenue and furnished by the city clerk in accordance with Section 66.058 (3)(c) and (e) of the Wisconsin Statutes. All information required on the form, including the full purchase price including sales tax and furnishings, shall be provided to the fullest extent possible and no person shall omit any of such information. No person shall knowingly falsify any such information.

G. Each mobile home located in the city shall pay a monthly parking fee as determined in accordance with Section 66.058 of the Wisconsin Statutes. Said fees shall be paid to the city treasurer on or before the tenth day of the month following the month for which such fees are due.

H. The monthly parking fees referred to in G above shall not be charged for the parking of any mobile home for a period of one week or less, nor for any space occupied by a mobile home accompanied by an automobile for an accumulating period not to exceed sixty days in any twelve months, if the occupants are tourists or vacationists. The licensee of such park shall keep a record of persons claiming exception pursuant to this section, containing the signature of such claimant and in a form approved by the city comptroller.

I. No person shall park, locate or place any mobile home outside of a licensed mobile home park in the city except unoccupied mobile homes may be parked on the lawfully situated premises of a vehicle service business for purposes of servicing or making necessary repairs or on a lawfully zoned premises for purposes of sales display.

No person shall stop, stand or park a mobile home on any street, alley or highway within the city in violation of Chapters 340 to 348 of the Wisconsin Statutes or the traffic ordinances and regulations of the city.

J. Licenses shall expire each year at the end of the month of June. (Ord. 6363 §36, 2002; Ord. 5280 §2, 1992; Ord. 4849, 1988; Ord. 4564, 1985; Ord. 4515 §18, 1984; Ord. 4392, 1983; Ord. 3677, 1976; Ord. 3246 §I(part), 1971; prior code §15.73).

16.12.050 Park inspections. A. No mobile home park license shall be issued until the city clerk has notified the police, health officer, fire department and building inspector, or the authorized agents, of the application and these officials shall inspect or cause to be inspected each application and the premises to determine whether the applicant and the premises on which the mobile homes are or will be located comply with the regulations, ordinances and laws applicable thereto. These officials shall furnish to the city clerk the results of their inspections and a statement as to whether the applicant and the premises meet all applicable requirements.

B. No license shall be renewed without a reinspection of the premises.

C. The enforcing agency shall have the power to enter at reasonable times upon any private or public property for the purpose of inspecting and investigating conditions relating to the enforcement of this chapter.

D. The enforcing agency shall have the power to inspect the register containing a record of all residents of the mobile home park.

E. It is the duty of every resident of a mobile home park to give the management thereof or his designated agent access to any part of the mobile home stand or common area at reasonable times for the purpose of making such repairs or alterations as are necessary to effect compliance with this chapter.

F. Whenever, upon inspection of any mobile home park, the enforcing agency finds that conditions or practices exist which are in violation of this chapter, the enforcing agency shall give notice in writing to the person to whom the license was issued that unless such conditions or practices are corrected within a reasonable period of time specified in the notice by the enforcing agency, the license shall be suspended. The enforcing agency shall furnish to the city council the information derived from such investigation. At the end of such period, the enforcing agency shall reinspect such mobile home parks and, if such conditions or practices have not been corrected, he shall with the approval of the city council cause suspension of the license and give notice in writing of such suspension to the person to whom the license is issued. Upon receipt of notice of such suspension, such person shall cease administration of such mobile home park. (Ord. 5280 §3, 1992; Ord. 3246 §I(part), 1971; Prior code §15.74).

16.12.060 Parks--General requirements. Any individual making application for a license to construct a mobile home park shall meet the following design and system requirements:

A. Site Location: A mobile home park shall be located only upon property designated for that use by the plan commission and the city council.

B. Restrictions upon mobile home parks shall be:

1. No part of any mobile home park shall be used for nonresidential purposes except such uses that are required for the direct servicing and well being of park residents, and for the management and maintenance of the park;

2. No dependent mobile home shall be permitted in the mobile home park unless a suitable building is provided for housing of toilets, showers and laundry facilities;

3. The condition of soil, ground water level drainage and topography shall not create hazards to the property or the health or safety of the occupants. The mobile home or mobile home park shall not be exposed to objectionable smoke, noise, odors, contaminated liquids or solids, or other adverse influences, and no portion of the park subject to predictable sudden flooding or erosion shall be used for any purpose which would expose persons or property to hazards;

4. No part of any mobile home park shall be used for the storage or sale of mobile homes.

C. Mobile home stand regulations are as follows:

1. The area of the mobile home stand shall be improved to provide adequate support for the placement and tie-down of the mobile home, thereby securing the superstructure against uplift, sliding, rotation and overturning;

2. Anchors and tie-downs shall be installed on all mobile homes as per manufacturer's specifications or federal guidelines. The mobile home park owner shall ensure that all mobile homes are anchored and tied down.

D. Streets. All mobile home parks shall be provided with safe and convenient vehicular access from abutting public streets or roads to each mobile home stand. Such access shall be provided by streets, driveways or other means.

1. Entrances. Entrances to mobile home parks shall have direct connections to a public street and shall be designed to allow free movement of traffic on such adjacent public streets. No parking shall be permitted on the entrance street for a distance of one hundred feet from its point of beginning.

2. Internal streets shall have the following specifications:

a. Internal streets shall have dust-proof surface and provide adequate drainage; no street grade shall be more than eight percent.

b. Roadways shall be of adequate width to accommodate anticipated traffic and in any case shall meet the following minimum requirements:

i. Two-way streets must be at least thirty-two feet wide if parking is permitted on both sides; twenty-four feet wide if parking is permitted only on one side, and eighteen feet wide if parking on the street is prohibited.

ii. A one-way street shall be at least 24 feet wide if parking is permitted on both sides; 18 feet wide if parking is permitted on one side; and 14 feet wide if parking on the street is prohibited.

iii. Dead end streets (cul-de-sacs) shall be limited in length to five hundred feet, and shall be provided at the closed end with a turn-around having an outside roadway diameter of at least sixty feet.

iv. Street intersections should generally be at right angles. Offsets at intersections and intersections of more than two streets at one point should be avoided.

v. Street Surface. All streets shall be provided with a smooth, hard and dense surface which shall be durable and well drained under normal use and weather conditions. The surface shall be maintained free of cracks and holes.

3. Adequate lighting shall be provided for all streets within the mobile home park so as to protect motorists, pedestrians and the residents of the park.

E. Walkways. All parks shall be provided with safe, convenient, all-season surfaced walkways, durable and convenient to maintain, between individual mobile homes and the adjacent park street and to all community facilities provided for park residents.

1. Common Walk System. A common walk system shall be provided and maintained between locations where pedestrian traffic is concentrated. Such common walks shall have a minimum width of three and one-half feet.

2. Individual Walks. All mobile home stands shall be connected to common walks, to paved streets, or to paved driveways or parking spaces connected to a paved street or roadway. Such individual walks shall have a minimum width of two feet.

F. Accessory Structures. Accessory structures shall not be used as complete, independent living units with permanent provisions for sleeping, cooking and sanitation. Such structures shall be erected, constructed or occupied in a mobile home park as directed by the management of the mobile home park, as required by the local enforcing agency, and as specified herein:

1. Accessory structures shall be designed in a manner that will enhance the appearance of the mobile home park.

2. Accessory structures shall not obstruct required openings for light and ventilation of the mobile home, and shall not prevent inspection of mobile home equipment and utility connections.

3. Construction and electrical installations, unless otherwise specified, shall comply with the building and electrical codes for the city.

4. Electrical circuits supplying the accessory structure shall be independent of the circuit supplying the mobile home.

G. Fire protection precautions shall be as follows:

1. Fires shall be made only in barbecue pits, fireplaces, stoves or other equipment intended for such purposes. Incinerators shall be prohibited.

2. Portable fire extinguishers rated for ABC type fires shall be kept in service buildings and shall be maintained in good operating condition. Their rating shall not be less than 2A10BC.

3. Fire hydrants shall be located within three hundred feet of any mobile home, service building or other structure in the park.

H. Public Utility System. All utility service systems shall be installed and maintained in accordance with applicable state or local codes and regulations governing such systems.

1. Mobile home service outlets shall be provided at each mobile home stand for electricity, telephone and gas, unless other fuels are being used.

2. All utility service lines shall be located underground within the mobile home park except in existing parks these utility service lines may be above ground. (Ord. 5280 §4, 1992; Ord. 3246 §I(part), 1971; Prior code §15.75).

16.12.070 Water supply and distribution system. An adequate supply of pure water supplied through a pipe distribution system connected with a public water main shall be provided, except as noted below:

A. A separate valved service shall be provided to each site, so constructed that it will not be damaged by the parking of a vehicle.

B. The water distribution system shall consist of piping capable of supplying eleven gallons per minute at a minimum pressure of twenty pounds per square inch at each mobile home stand. Also, the system shall be capable of supplying the following water demand for mobile homes:

Number of Mobile Home Spaces	Demand Load (gpm)
50	165
75	225
100	267
150	348
200	432
250	468
300	561

C. All water piping, fixtures and other equipment shall be constructed and maintained in accordance with state and local regulations and requirements, and shall be of a type and in locations approved by the health authority.

D. Individual water riser pipes shall be located within the surface area of the mobile home stand approximately thirty feet from the front of a mobile home stand. They shall extend at least six inches above ground elevation and the pipe diameter shall be at least three-quarter inch. The water outlet shall be capped when a mobile home does not occupy the stand.

E. A shutoff valve below the frost line shall be provided near the water riser pipe and shall conform to Section ILHR 82.51 of the Wisconsin Administrative Code. (Ord. 5280 §5, 1992; Ord. 3246 §I(part), 1971; Prior code §15.76).

16.12.080 Sewage disposal system. A. An adequate sewer system shall be constructed and maintained according to standards set by the Department of Industry, Labor and Human Relations (Chapter 82, Wisconsin Administrative Code).

B. All sewer lines shall be adequately vented, have watertight joints, and be so constructed that they can be closed when not connected to a mobile home.

C. Each mobile home stand shall be provided with a four inch diameter sewer riser pipe. The sewer riser pipe shall be located within the surface area of the mobile home stand, and approximately forty feet from the front of such stand. The rim of the riser pipe shall extend at least four inches above ground elevation, and provisions shall be made for sealing the sewer riser pipe when a mobile home does not occupy the stand. (Ord. 5280 §6, 1992; Ord. 3246 §I(part), 1971; Prior code §15.77).

16.12.090 Solid waste disposal system. A. Solid waste collection stands shall be provided for all waste containers. Such shall be so designed as to prevent containers from being tipped, to minimize spillage and container deterioration and to facilitate cleaning around them.

B. Garbage and trash collection shall be by means of a public or private system at least two times per week. Where suitable collection service is not available from municipal or private agencies, the management shall provide this service. All refuse shall be collected and transported in covered vehicles or covered containers. (Ord. 3246 §I(part), 1971; Prior code §15.78).

16.12.100 Gas distribution system. Gas equipment and installations within a mobile home park shall be designed and constructed in accordance with the applicable codes adopted by the state or local enforcing agency.

A. The minimum hourly volume of gas required at each mobile stand outlet or any section of the mobile home park gas piping system shall be calculated as follows:

	Natural	L.P.G.
For the most remote mobile home lot outlet on any branch or main	125 CFH	50 CFH
For the second most remote outlet on any branch or main	100 CFH	40 CFH
For the third most remote outlet on any branch or main	75 CFH	30 CFH

After the third most remote outlet subsequent branch or main line loadings may be computed using a value of fifty cubic feet per hour for natural gas and twenty cubic feet per hour for liquified petroleum gas.

B. All gas piping shall be installed below ground and shall have a minimum earth cover of eighteen inches. Gas piping shall not be installed under any mobile home. (Ord. 3246 §I(part), 1971; Prior code §15.79).

16.12.110 Fuel oil distribution system. Distribution systems shall be installed and maintained in accordance with the applicable codes adopted by the state or local enforcing agency. (Ord. 5280 §7, 1992; Ord. 3246 §I(part), 1971; Prior code §15.80).

16.12.120 Service buildings--Community facilities. A. The requirements of this section shall apply to service buildings, recreation buildings and other community service facilities such as:

1. Management offices, repair shops and storage areas;
2. Sanitary facilities;
3. Laundry facilities;
4. Indoor recreation areas.

B. All portions of a permanent structure shall be properly protected from damage by ordinary uses and by decay, corrosion, termites and other destructive elements. Exterior portions shall be of such material and be so constructed and protected as to prevent entrance or penetration of moisture and weather.

C. All rooms containing sanitary or laundry facilities shall:

1. Have sound-resistant walls extending to the ceiling between male and female sanitary facilities. Walls and partitions around showers, bathtubs, lavatories and other plumbing fixtures shall be constructed of dense, nonabsorbent, waterproof material or covered with moisture-resistant material.

2. Have at least one window or skylight facing directly to the outdoors. The minimum aggregate gross area of windows for each required room shall be not less than ten percent of the floor area served by them.

3. Have at least one window which can be easily opened, or a mechanical device which will adequately ventilate the room.

D. Toilets shall be located in separate compartments equipped with self-closing doors. Shower stalls shall be of the individual type. The rooms shall be screened to prevent direct view of the interior when the exterior doors are open.

E. Illumination levels shall be maintained as follows:

1. General seeing tasks - 5 foot-candles;
2. Laundry room work area - 40 foot-candles;
3. Toilet room, in front of mirrors - 40 foot-candles.

F. Hot and cold water shall be furnished to every lavatory, sink, bathtub, shower and laundry fixture, and cold water shall be furnished to every water closet and urinal. (Ord. 3246 §I(part), 1971; Prior code §15.81).

16.12.130 Responsibilities of management. A. The park management shall maintain an office in the park. A copy of the park license and of the ordinance codified herein shall be posted therein and the park register shall at all times be kept in the office.

B. It is the duty of the park owner or operator, together with any attendants or persons in charge, to:

1. Keep a register of all guests or occupants, to be open at all times to inspection by local, county, state and federal officers which shall show for all guests or occupants:

a. Name and address;
b. Number of children of school age;
c. State of legal residence;
d. Date of entrance and departure;
e. License numbers of trailers and other vehicles;
f. State issuing such licenses;
g. Expected length of stay;
h. Place of last location and length of stay;
i. Place of employment of each occupant;
j. Persons claiming exemption from parking fees;

2. Maintain the park in a clean, orderly and sanitary condition at all times;

3. Report to the local health department any persons or animals infected or suspected of being infected with any communicable diseases;

4. Insure that the provisions of this chapter are complied with and enforced and report promptly to the proper authorities any violation of this chapter or other violations of law which may come to his attention;

5. All homes shall install and maintain smoke detectors as required by state law;

6. Collect and pay to the city treasurer the monthly parking fees called for in Section 16.12.040 and shall keep a record of the persons paying such fees and the amount paid. (Ord, 5280 §8, 1992; Ord. 4717, 1987; Ord. 3246 §I(part), 1971; Prior code §15.82).

16.12.140 Responsibilities of the resident. It is the duty of the occupants of mobile homes to:

A. Maintain their site in a clean, orderly and sanitary condition at all times;

B. Abide by all applicable state and city regulations and rules established by the park management. (Ord. 3246 §I(part), 1971; Prior code §15.83).

16.12.150 Violations--Penalty. Any person who violates any provision of this chapter shall, upon conviction, be subject to a forfeiture not exceeding $500 for each offense. Each day during which any violation continues shall be deemed to constitute a separate offense. (Ord. 5280 §9, 1992; Ord. 3246 §I(part), 1971; Prior code §15.84).

16.12.160 License revocation or suspension. The city council is authorized to revoke any license or permit issued pursuant to the terms of this chapter in accordance with Section 66.058 of the Wisconsin Statutes. (Ord. 4580, 1985; Ord. 3246 §I(part), 1971; Prior code §15.841).

16.12.170 Exceptions. Mobile home parks which, at the time of adoption of the ordinance codified herein, existed lawfully with sites which do not comply with the requirements of the ordinance codified herein, may continue to operate; however, expansion or modification of such parks shall be in accord with these regulations. (Ord. 3246 §I(part), 1971; Prior code §15.85).

Chapter 16.16

ON-PREMISE SIGNS

Sections:

16.16.005 Scope.
16.16.010 Purpose and intent.
16.16.020 Administration and enforcement.
16.16.030 Definitions.
16.16.040 Permits for signs.
16.16.050 Permits not required.
16.16.060 Maintenance and repair.
16.16.070 Requirements by type of sign.
16.16.080 Provisions for signs by zoning district.
16.16.090 Special district sign regulations.
16.16.100 Special use signing.
16.16.110 Temporary signs.
16.16.120 Signs exempt from sign permits.
16.16.130 Prohibited signs.
16.16.140 Non-conforming signs.
16.16.150 Removal of certain signs.

16.16.160 Appeal authority.
16.16.170 Licensing and insurance requirements.
16.16.180 Signs not regulated by ordinance.
16.16.190 Interpretation.
16.16.200 Conflicting codes and ordinances.
16.16.210 No vested right.
16.16.220 Violations and penalties.

16.16.005 Scope. This code provides the legal frame-work to regulate all on-premise signs in the city except those considered as poster panels. All signs considered as poster panels shall be regulated in accordance with the provisions of Chapter 16.18. (Repealed and recreated Ord. 7246, 2017; Ord. 4823, 1988).

16.16.010 Purpose and Intent. Exterior signing has a clear impact on the character and quality of the city. As a prominent part of the urban environment, signs may attract or repel the viewing public, affect the safety of pedestrian and vehicular traffic, and help set the tone and legibility of the neighborhood and the city. This code establishes minimum standards to promote life, health, safety, welfare, convenience, and enjoyment of the public by regulating the design, quality of materials, construction, location, electrification and maintenance of all on-premise signs, bulletin boards, and advertising devices visible from public rights-of-way, including such signs and devices not contained within a building and such interior signs as may be regulated herein.

This code is intended to achieve the following:

A. Promote the safety of persons and property by providing that signs neither create hazards due to collapse, fire, decay, or abandonment, nor obstruct fire-fighting or police surveillance.

B. Promote safe, efficient and enjoyable vehicular traffic by providing that signs do not create traffic hazards by confusing or distracting motorists, impairing a driver's ability to see pedestrians, obstacles, other vehicles, or to read traffic signs.

C. Encourage efficient sign display to enhance business and industry by the effective identification of businesses and services for customers and other persons.

D. Promote the effective and equitable transfer of information by providing that persons exposed to signs are not overwhelmed by such factors as sign size, height, number, illumination or setback and are able to exercise freedom of choice to observe or ignore said message, according to the observer's purpose.

E. Improve the quality of community life by encouraging signs compatible with the overall street setting and neighborhood character, appropriate and in harmony with the principal activities and structures being served, and legible in the circumstances in which they are seen.

F. Encourage a desirable urban system of signage with a minimum of clutter.

G. Protect the public welfare and enhance the appearance and economic value of the urban landscape by providing that signs do not create a nuisance by brightness, size, height, number or movement for users of public rights-of-way or contiguous properties.

H. Enhance the special character of particular areas or districts within the city by helping the observer understand the unfolding order of the city and to orient within it.

I. Promote the public order and welfare by encouraging the proper maintenance of signs throughout the life of the sign.

16.16.020 Administrative and Enforcement. The administration and enforcement of this Chapter shall be the responsibility of the Director. (Ord. 4823, 1988).

16.16.030 Definitions. In this Chapter and Chapter 16.18, the following words shall have the meaning defined below, unless it is apparent from the context that different meanings are intended.

Abuts. Used in reference to determining when an exterior building wall abuts a street which is adjacent the premise. A wall facing a street abuts the street if its exterior face is parallel to or 45º or less of being parallel to such street.

Animated Sign. A sign which displays a rapid sequence of images by flashing, changing appearance, or changing color in a manner that creates an illusion or appearance of movement, change, or motion of symbols, letters, characters, illustrations, images, video, or messages.

Animation. The appearance or illusion of movement, change, or motion by a sequential display of images, motion picture video, or other means; excluding, however, text message transitions and static images, pictures, logos, and icons.

Architectural Detail. Any projection, relief, change of material, window or door opening which is on the facade of a building.

Awning. A type of hood or covering over doors or windows, and including two categories:

A. Fixed Awnings. Awnings constructed of light metals or plastics mounted on frames which are not adjustable or movable.

B. Adjustable Awnings. Awnings constructed of light metals, plastics, fabric, or equivalent material mounted on frames which are adjustable and movable.

Awning Sign. A sign which is painted, sewn or similarly affixed on an awning.

Building. A structure having a roof supported by columns or walls.

Building Permit-Active Sign. A temporary sign which warns or informs persons of construction or demolition for a project.

Building Wall. A wall of a principal building as defined by the building code. Where separate facades of a building are oriented in the same direction or in the direction within 45 degrees of one another, such facades are to be considered as one building wall.

Canopy. A permanent roof-like structure extending from part or all of a building face, constructed of some durable material such as metal or wood, and which is supported from the ground.

Canopy Sign. A sign which is attached to or painted on a canopy.

Changing Sign. A changing sign shall include: electronic message center signs, public service informational signs, readerboard signs, and time and temperature signs.

Copy. The lettering, representations, emblems, or other figures used to convey a message.

Directional or Instructional Sign. A sign which provides direction or instruction to guide persons to facilities intended to serve the public, including but not specifically limited to those signs identifying restrooms, public telephones, public walkways, parking areas, and other similar facilities.

Director. The Director of Community Development or designee.

Election Campaign Period Sign. A temporary sign expressly permitted by Wis. Stats. §12.04 that is otherwise consistent with Federal, State, and local laws.

Electrical Sign. Any sign which contains electric wiring. This shall not include reflectively illuminated signs.

Electronic Message Center Sign. A sign which is designed so that messages, characters, symbols, letters, images, video, or illustrations are displayed and changed through the use of electronics or computers.

Erect. To build, construct, structurally alter, display, relocate, attach, hang, place, suspend, or affix any sign, and shall also include painting of a sign.

Feather banner. A display consisting of a piece of vertically elongated, flexible material such as cloth or vinyl which is affixed to one or more poles driven or anchored to the ground or attached to a building. Also referred to as a feather sign or bow flag.

Flag. A fabric or other flexible material, typically rectangular or triangular shaped, attached to a pole or mast along the shorter side of the fabric. Such pole or mast shall be affixed to a building or ground to comply with the wind load standards defined in s. 16.16.070.

Flashing Sign. A sign other than an animated sign which is varied with time in color or brightness.

Ground Sign. A sign supported by one or more uprights, poles, pylons, or braces placed in or upon the ground surface, and not attached to any part of any building. Such sign may also be referred to as a freestanding sign, pole sign, detached sign or pylon sign.

Illuminated Sign. A sign designed to give forth any artificial light, or designed to reflect such light deriving from any source which is intended to cause such light or reflection. Such signs are divided into three categories.

A. Reflected Lighting. Lighting, which is from a source which reflects light from the surface of the sign to the eyes of the viewer.

B. Internal Lighting. Lighting for which the source of light is located in such manner that the light must travel through a translucent material other than the bulb or tube necessary to enclose the light source, which material has the effect of dispersing the light before it strikes the eye of the viewer.

C. Direct Lighting. Lighting where the source of the light, such as the bulb, is visible to the viewer.

Mansard. A permanent sloped structure attached to a wall of a building having an interior angle greater than 45 degrees from the horizontal and which derives part or all of its support from the building wall to which it is attached.

Marquee. A permanent roof-like shelter extending from part or all of a building face, constructed of some durable material such as metal or wood, and which is not supported from the ground.

Marquee Sign. A sign which is attached to or painted on a marquee.

Monument Sign. A ground sign generally having a low profile with no open space between the ground and the sign and having a sign structure constructed of masonry, wood, or materials similar in appearance as approved by the Director.

Motor Fuel Pump Island Canopy. A roof-like shelter which may be either attached or unattached to the principal building and is supported by one or more uprights or poles mounted in or upon the ground which is erected over a fuel pump island where motor fuel is dispensed for retail sale.

Motor Fuel Pump Island Canopy Sign. A sign which is attached to or painted on the side of the canopy of a motor fuel pump island canopy.

Non-conforming Sign. A sign which does not comply with one or more of the provisions of this Chapter, Chapter 16.18 or Title 18 of the City Code of Ordinances.

Off-premise Sign. A sign which directs attention to a business, profession, person, activity, commodity, or service which is conducted, sold, or offered at a location other than the premises on which the sign is located.

On-premise Sign. A sign which directs attention to a business, profession, person, activity, commodity, or service located on a premise where the sign is installed and maintained.

Parcel. An individual piece of land given a separate parcel number by the city assessor. Contiguous pieces of land with separate numbers which are under unified control and are in use by the same business enterprise shall be treated as one parcel.

Portable Sign. A sign mounted on wheels or on a trailer with removable wheels, or other signs which are not permanently affixed to the ground, a building, or other structure and which may be readily moved from place to place but excluding sidewalk signs identified in this chapter.

Poster Panel. A sign erected, constructed or maintained for the purpose of displaying changeable advertising or off-premise outdoor advertising by means of posters, or pictorial or reading matter, when such sign is supported by uprights or braces, or attached to a building, except that a poster panel shall not include a changing sign.

Premise. A designated lot, parcel, tract, or area of land established by plat, subdivision, or otherwise permitted by law to be used, developed, or built upon under single or joint control.

Principal Building. The main or principal building located upon a premise in which the principal use or uses of the premise is conducted. A shopping center shall be considered as one principal building.

Projecting Sign. A sign other than a wall, canopy, marquee, or awning sign which projects from and is supported by a wall of a building, with the face or faces of such sign oriented on a plane perpendicular with the building wall.

Reader Board Signs. A sign which is constructed as a wall or ground sign and designed so that individual letters, characters, or illustrations can be changed or rearranged either manually or mechanically.

Roof Line. The top of the building wall or the top of the parapet. For buildings with sloped roofs, roof line shall include that which forms the top line of the building silhouette, excluding any projections such as chimneys.

Roof Sign. A sign erected upon or above any portion of a roof or parapet wall of a building, and which is wholly or partially supported by said building.

Shopping Center. Two or more retail or service businesses which are located within the same building or within buildings that are connected and which tenants share private, off-street customer parking areas.

Sidewalk Sign. A type of temporary sign placed on a premise or in front of a business on the public sidewalk and not attached to the ground or any structure. Sidewalk signs shall include sandwich board signs, A-frame signs, T-frame signs, three-dimensional signs, and menu boards.

Sign. Any object, device, display, or structure, or part thereof, situated outdoors or visible from outdoors, which is used to advertise, identify, display, direct, or attract attention to an object, person, institution, organization, business, product, service, event or location by any means, including words, letters, figures, design, symbols, fixtures, colors, illumination, or projected images.

Sign Area or Copy Area. The entire area within a single continuous perimeter enclosing the extreme limits of the sign. Structural members which are not an integral part of the display or not used as a background for the display shall not be included for the purpose of this definition.

For signs having more than one face, the sign area shall be determined by totaling the square footage of the signs faces which can be seen from any one direction at a time. For signs having two sign faces and where such sign faces are oriented in opposite directions (180°), the side having the largest area shall be used to calculate sign area. For the purpose of calculating sign area for a three dimensional figure or symbol, the area of the silhouette of such figure or symbol which is the largest shall be used.

Sign Face. The copy area portion of a sign.

Sign Height. The distance measured vertically from highest point of the sign. For ground signs this shall include visual appurtenances which may extend above the sign.

Sign Structure. Any structure which supports, has supported, or is capable of supporting a sign.

Street. A public thoroughfare within the public right-of-way which affords principal means of access onto abutting property, but not including thoroughfares within any right- of-way less than 20 feet in width.

Temporary Sign. A banner, pennant, poster, or advertising display intended to be displayed for a limited period of time and listed in s. 16.16.110. A sign physically attached to a building through devices such as bolts, nails, and screws is not considered temporary.

Tenant. For the purposes of this Chapter, a tenant shall be a firm, partnership, corporation, or other business entity which is an occupant of a non-residential building.

Wall Sign. A sign which is attached directly to or painted upon a building wall, with the exposed face of the sign in a plane approximately parallel to the building wall. A canopy, marquee, window, projecting or awning sign shall not be considered as a wall sign. A sign mounted upon a sloped roof of a commercial building which is an integral part of the design of such roof and building shall be considered a wall sign.

Window Sign. A sign affixed to, in contact with, painted upon the exterior or interior of a window or located or placed in such a manner in proximity to a window, for the purpose of viewing from outside the premises. The term does not include merchandise located in a window.

Vision Triangle. The area formed by measuring from the intersection of two property lines at the intersection of two streets to points 20 feet along said property lines and then connecting these two points with a straight line. (Repealed and recreated Ord. 7246, 2017; Ord. 6809 §1, 2008; Ord. 6627, §1, Ord. 5933 §1, 1999; Ord. 5032 §1, 1990; Ord. 4823, 1988).

16.16.040 Permits For Signs. Signs may be erected, moved, enlarged, or reconstructed within the city upon issuance of a permit for such sign subject to the provisions herein.

A. Permit Required. Except as otherwise provided in this Chapter, it shall be unlawful for any owner, tenant, or agent of such owner or tenant to erect, construct, enlarge, move, modify, or convert any sign as regulated by this Chapter in the city, or cause the same to be done without first obtaining a sign permit for such sign from the Director as required by this Chapter.

B. Application for Permit. Application for a permit shall be made to the Director upon a form provided by the Director and shall be accompanied by such information as may be required to assure compliance with all appropriate laws and regulations of the city and state including:

1. Name and address of owner of the sign.
2. Name and address of owner and person in possession of the premises where the sign is located or to be located.
3. Clear and legible drawings accurately showing the location of the sign which is the subject of the permit and all other applicable signs on the same premises and all ground signs within 100 feet of the proposed sign if the permit is for a ground sign.

4. Information regarding any applicable items such as: the dimensions, colors, height, copy, construction supports, materials of the sign and method of attachment and character of structural members to which attachment is to be made. Any additional information needed to determine whether a sign complies with all codes may be required.

C. Permit Issuance. It shall be the duty of the Director, upon the filing of an application for permit, to examine such plans and specifications and other data and the premises upon which it is proposed to erect the sign or other advertising structure, and if it appears that the proposed structure is in compliance with all the requirements of this code and all other laws and ordinances of the city, the permit shall be issued. The Director shall issue or deny the permit within five working days of when the application has been filed. This time may be extended by the Director if additional actions or information is required. If the work authorized under a permit has not been completed within 180 days after date of issuance, the permit shall become null and void. The validity of a permit may be extended beyond 180 days for extenuating circumstances to be determined by the Director.

D. Permit Fees. All fees shall be as stated in the City of Eau Claire Fees and Licenses Schedule.

E. Inspection. The Director may require that the footings for a ground sign be inspected prior to erecting such sign or supports. As soon as a sign has been erected, the permittee shall notify the Director, who shall inspect such sign and approve the same if it is in compliance with the provisions of this Chapter. The Director may inspect all signs or other structures regulated by this Chapter for the purpose of ascertaining whether it is secure or whether it is in need of removal or repair.

F. Permit Revocable at Any Time. All rights and privileges acquired under the provisions of this Chapter, or any amendments thereto, are revocable at any time by the Director upon proof of a violation of this chapter in accordance with the Municipal Administrative Procedure Act, Wisconsin Statutes, Chapter 68. All such permits shall contain a statement of this limitation. If a permit is revoked or canceled or application is withdrawn, the applicant is not entitled to a refund of all or any part of the fee.

G. Substitution. Any sign authorized by this chapter may contain a noncommercial message.

16.16.050 Permits Not Required. Permits shall not be required for:

A. Change of copy, including the replacement of sign panels in an existing sign cabinet, provided no structural change is made.

B. Painting, repairing, cleaning or maintaining of an existing sign unless a structural change is made. Maintenance or repainting of signs painted directly on a building shall be subject to s. 16.16.140 A. 1.

C. Signs subject to the provisions of s. 16.16.120. (Ord. 5184 §1, 1991; Ord. 4823, 1988).

16.16.060 Maintenance and Repair. All signs, including their supports, braces, guys and anchors, shall be kept in good repair at all times. Any sign which is not maintained properly shall be subject to the provisions of 16.16.150. (Ord. 4823, 1988).

16.16.070 Requirements by Type of Sign. The provisions set forth below shall apply to all applicable signs unless otherwise specified in this Chapter.

A. General Provisions.

1. Wind Pressure. All non-temporary signs shall be designed, constructed, erected, and maintained to withstand horizontal wind pressures of not less than 30 pounds per square foot. All temporary signs shall be attached to supports so as to withstand horizontal wind pressures of not less than 30 pounds per square foot.

2. Securing Signs. Cables, anchors, guys, fasteners, lag screws, bolts, or other equipment or materials used in securing any non-temporary sign to its mounting shall be made of galvanized metal or of equal corrosion resisting metal or metal treated so as to be equally corrosion resistant. Supports and braces used to secure or support a sign shall be designed as an integral part of the sign design or sign structure, or be screened from public right-of-way whenever possible.

3. Identification. Every sign requiring a permit hereafter erected shall have marked, in a conspicuous place thereon, the name of installer and manufacturer, and the voltage of any electrical apparatus used in connection therewith.

4. Obstructing Access. No sign or sign structure, or any anchor, brace, guide wire or guide rod shall be attached, fastened or anchored to any fire escape, fire ladder, chimney or stand pipe, and no such structure or any part of such structure or anchor brace, guide wire or guide rod shall be erected, put up or maintained so as to cover a required doorway, required window or other opening of any building so as to prevent or hinder ingress or egress through such required door, doorway, window, exit or other opening, or so as to prevent or hinder the raising or placing of ladders against such building for rescue or fire suppression purposes.

5. Signing Plans. Signing for any shopping center, hotel or motel development, business with a drive-up window, planned development, multiple tenant office building, business park, or industrial park, shall be in conformance with an overall sign plan approved by the Plan Commission which

addresses signing design and requirements for the development. Such plan shall set forth requirements pertaining to size, location, height, and illumination of all exterior signs to assure compatibility between all such signs within the development. Standards contained in this plan shall run with all leases, or sales of property which are a part of the development. Such sign plan shall be a component of a required site plan review for such development. In the case that such development is submitted as a planned development under Title 18, the zoning code, such sign plan shall be made part of the General Development Plan of such development.

6. Signs Adjacent to Residential Districts.

a. Front Yard Setbacks. Any sign or sign structure located on a lot abutting a residentially zoned lot which fronts on the same street as said lot shall be set back so as to meet the front yard requirements of the residentially zoned lot as set forth in Title 18 if such residential setback requirement exceeds that of the zoning district in which such sign is to be located.

b. Side and Rear Yard Setbacks. Except for temporary and exempt signs, no sign surface or area facing the side or rear lot lines of a residentially zoned lot shall be located within 50 feet of such side or rear lot line.

c. Flashing Signs. No flashing signs or directly illuminated signs shall be located within 100 feet of a dwelling located within any residential district.

7. Signs Extending into Public Right-of-Way. Upon application to the Director for an encroachment, awnings, awning signs, marquee signs and wall signs may extend into the public right-of-way in accordance with the provisions of this section. Such structures and signs shall not be subject to the provisions of Chapter 13.24, "Encroachments". The provisions of Wisconsin Statutes, s. 66.0425(1) are deemed to be applicable to such structures and signs, provided that such structures and signs shall be subject to all remaining provisions of Wis. Stats. s. 66.0425 except for sections 66.0425(3), (6) and (9), and the application process and requirement of a bond under Wis. Stats. s. 66.0425(2).

B. Illuminated Signs.

1. Electrical Codes. Electric signs shall be considered as electrical fixtures, and the signs as well as the electrical parts thereof shall comply with Chapter 16.24 of the Code of Ordinances, the provisions of which are incorporated herein by reference. All electric signs shall meet the listing requirements of the state of Wisconsin Department of Safety and Professional Services Chapter 316. All electrical equipment, wiring, materials, and wiring methods used in connection with such signs shall comply with the electrical codes. All ballasts used in connection therewith shall have a 90 percent power factor or better. All lights not attached to a sign shall comply with the specifications of the electrical code.

2. Glare. All signs shall be so designed, located, shielded, and directed to prevent the creation of a public nuisance or safety hazard resulting from the casting of glare or direct light from artificial illumination upon the adjacent street and surrounding property.

3. Use of Direct Illumination. Incandescent light bulbs utilized in directly illuminated signs shall not exceed 11 watts, except for bulbs utilized in changing signs in which case such bulbs shall not exceed 33 watts.

4. Exposed Neon Lighting. Neon lighting shall be subject to the following provisions:

a. Installation. Such lighting shall be installed and serviced by firms licensed by the City of Eau Claire pursuant to the provisions of this Chapter and Chapter 16.24.

b. Clearance. Neon lighting installed on the exterior of a building or on a sign structure shall be a minimum of 8 feet above grade unless it extends into the public right-of-way, in which case the minimum shall be 10 feet above grade.

c. Wiring. All electrodes shall be covered with insulating caps manufactured for that purpose. Transformers other than window-type transformers which are cord connected having no exposed electrical terminals and with a pull chain shall be installed in vented metal boxes and transformer leads shall be enclosed in conduit from the transformer box to within 12 inches of the neon electrode. All leads other than crossover links up to a maximum of 48 inches shall be enclosed in plastic or metal conduit. No high voltage lead shall be spliced.

d. Decorative Use. Neon lighting used primarily for decorative purposes for a building shall be exempt from the provisions relating to number of permitted signs and allowable copy area.

5. Flashing Signs, Animated Signs and Building Illumination.

a. Flashing signs, animated signs and building illumination shall not be used in such a manner that they will be confused with traffic devices or emergency vehicle services. Such signs or building illumination shall not employ lights of a color which is used in a traffic signal when they are in the vicinity of a traffic signal. The determination as to whether a traffic hazard has been created shall be made by the Director.

b. Flashing signs, animated signs, or building illumination, which flashes or changes brightness or color in any manner, shall be allowed only within the Central Business District Sign District upon approval of a conditional use permit by the Plan Commission pursuant to Chapter 18.35. The Plan Commission shall further consider whether such sign, or building illumination is consistent with

the architecture, scale, and design of the building and compatible with the appearance of neighboring buildings, character of the street setting, and the sign district as a whole.

C. Wall Signs.

1. Compatibility. No wall sign shall interrupt or conceal the architectural details of a building.

2. Projection from Wall. No wall sign shall extend more than 12 inches from the building wall to which it is attached. Lighting fixtures providing reflected illumination for a wall sign may extend into the public right-of-way and have a maximum projection of 36 inches from the building wall to which the sign is attached, but in no case extend closer than 2 feet to the curb. A wall sign and its appurtenances shall be at least 10 feet above grade before extending into the public right-of-way.

3. Sign Height. No wall sign shall extend above the roof line or parapet wall of the building to which it is attached.

4. Signs Attached to Mansards. A sign attached to a mansard shall be considered as a wall sign. Such signs shall either be mounted flat against the mansard or parallel with the building wall which supports the mansard. In no case shall such sign extend above the top of the mansard.

5. Design. A wall sign may consist of either individual letters mounted on a building wall or one sign structure attached to a building wall. Such sign structure may consist of one sign panel or cabinet or a combination of two or more sign panels, modules, or cabinets which have no more than 8 inches between such sign panels, modules, or cabinets, and which appear to be an integral part of the total sign and are compatible in terms of construction design and materials, illumination, color, and lettering style. A display consisting of a combination of individual letters and a sign structure shall be considered as one sign provided the separation between the sign structure and at least one of the individual letters is no more than the height of the tallest individual letter used in such sign.

6. Sign Area. Sign area for a wall sign shall include the entire area within a single continuous perimeter which encloses the message, including any background materials, designs, or background colors which are used to differentiate or highlight the message from the wall to which it is attached.

D. Ground Signs.

1. Spacing. A ground sign shall be no closer than 100 feet from any other ground sign unless a conditional use permit is granted by the City Plan Commission as provided in Title 18 of the City Code of Ordinances. Signs on the opposite side of a street shall not be considered in this measurement.

In granting a conditional use permit, the Plan Commission must find one of the following:

a. the placement of such sign more than 100 feet from another ground sign is not reasonably practicable;

b. complying with the 100 foot requirement would require the placement of such sign in a location that would obstruct or block buildings, or conflict with traffic circulation parking areas, or drives;

c. or that clustering such signs closer than 100 feet would provide for a more unified signage theme within the area.

If the Plan Commission makes a finding that one of the above situations exist, a conditional use may be granted subject to the provisions set forth below:

a. the sign will not adversely affect or inhibit the safe and efficient movement of pedestrians and motorists;

b. the sign will not create or add to sign clutter due to the display of an inordinate number of signs which overwhelms those viewing an area;

c. the sign will be compatible with the street setting and neighborhood character and enhance the appearance of the streetscape;

d. the sign will be compatible with surrounding ground signs in terms of height, location, copy area, type of illumination and will not obstruct the view of any surrounding signs.

In granting such a conditional use permit, the Plan Commission may impose appropriate conditions in keeping with the purpose and intent of this Chapter pertaining to but not limited to the sign's height, location, design, copy area, removal of non-conforming signs on the property and appropriate site improvements.

2. Construction. Ground signs over 10 feet in height or which are electrical signs shall be constructed of non-combustible materials, provided however, that facings, letters, figures, decorations, and structural trim thereof may be made of approved combustible materials. If, at the time of application for a sign permit, it is the opinion of the Director that a sign less than 10 feet in height may create a fire hazard due to its size or location, the Director shall require that such sign be constructed of non-combustible materials.

3. Clearance. If the location or design of a ground sign may result in a conflict with pedestrian or vehicular movement or circulation on the premise, the Director may require a clearance of up to 10 feet from the finished grade level or curb elevation to the lowest part of such sign.

4. Vision Triangle. No ground sign which exceeds 3 feet above the curbs to which it is adjacent shall be erected within the vision triangle unless such sign provides at least 10 feet of clearance from the curb elevations to the lowest part of the sign and the sign structure of such sign is of a design that

minimizes any vision restriction within this area. The street grade shall be used where no curb exists to determine sign height.

5. Extending Over Right-of-Way. No ground sign shall extend over any property line into a public right-of-way.

6. Landscaping. All ground signs erected after the effective date of this Chapter shall be located within a landscaped yard or a curbed or similarly delineated landscaped area which extends a minimum of three feet in all directions of the base of the sign, or which is 5 square feet in area, whichever is deemed most appropriate by the Director in order to protect and preserve the health, safety, and welfare of the public.

7. Design. All sign panels, modules, and representations attached to a sign structure shall have an integrated design. Such integrated design shall consider construction design and materials, illumination, color, and message design to assure compatibility of each panel, module, and representation attached to such sign structure.

8. Setback & Height. Ground signs shall comply with the setback and height requirements as set forth in this Chapter. Required setbacks for ground signs shall be measured from property line to either the sign or sign structure, whichever is nearest.

E. Canopy and Marquee Signs.

1. Sign Design. Canopy and marquee signs shall follow the design provisions of s. 16.16.070 C. 5. Illumination shall be subject to the provisions of the zoning district or sign district in which such sign is located.

2. Height. No canopy or marquee, or canopy sign or marquee sign, shall have less than 10 feet of vertical clearance from the lowest point of said canopy, marquee, canopy sign, or marquee sign to the finished grade level. A canopy sign or marquee sign shall not extend above the roof line or parapet wall, and if over the public right-of-way, shall not exceed three feet in height, measuring from the lowest edge of the canopy or marquee to the top edge of the sign, except as provided in s. 16.16.090 A. 6.

3. Projection from Building Wall. A canopy or marquee, or canopy sign or marquee sign shall comply with the setback requirements of Title 18. Where no street setback is required, a marquee or marquee sign may extend into the right-of-way to within one foot of the curb line.

4. Building Permit. No canopy or marquee may be erected without first obtaining a building permit.

5. Special Review for Marquees and Marquee Signs. If deemed appropriate by the Director, a permit shall not be issued for the erection or maintenance of a marquee or marquee sign which would be located within the right-of-way until an application and plan which sets forth in detail the plans and specifications and location of said marquee, or marquee sign has been filed with the Director for such permit. Such application and plan must be prepared by a registered architect or engineer.

When required by the Director, the applicant shall furnish complete proof in the form of engineering calculations, stress diagrams, that the building to which the marquee or marquee sign is to be attached is so built that the addition of the marquee or marquee sign to the building will not stress the materials in the building beyond the limits established in the state building code for these materials.

F. Awning Signs.

1. Illumination. May be illuminated by reflected or internal sources of light, and shall not flash.

2. Height and Construction. An awning shall be supported by a metal bracket or metal framework attached firmly to the building. The frames and supports for all such awnings shall be securely mounted to the walls of the building upon which such awning is placed. The lowest rigid portion of any awning shall not be less than 8 feet above the sidewalk if over public right-of-way and the lowest part of the curtain scallop or valance, made of fabric or equivalent material, shall be no less than 7 feet above such sidewalk if over public right-of-way when in use. No awning shall extend above the roofline of the building to which it is attached. A sign attached to an awning shall not exceed 40 percent of the area of such awning or the maximum copy area allowed for an individual sign in the zoning district or sign district it is located; whichever is less. An awning sign shall consist of only letters, emblems, or insignia painted, sewn or similarly affixed upon the awning.

3. Projection from Building Wall. An awning shall comply with the setback requirements of Title 18. Where no street setback is required, an awning may extend 10 feet beyond the property line into the right-of-way but no closer than 1 1/2 feet to the adjoining curb line.

4. Building Permit. No awning may be erected without first obtaining a building permit. Recovering an existing awning shall not require a building permit; however, the Director shall be notified prior to any change in covering to ensure compliance with this Chapter.

5. Sign Design. The design provisions of s. 16.16.070 C. 5. shall apply to the signs affixed to an awning.

G. Roof Signs.

1. Construction. All roof signs shall be constructed entirely of noncombustible materials as defined in city and state codes. Uprights, supports and braces which support roof signs shall be of

noncorrosive metal. No sign shall be placed upon any roof so that the stresses set up in any portion of the roof and supporting structure are greater than permitted for such material under state material under state building code. No roof sign shall be placed on the roof of any building so as to prevent the free passage from one part of the roof to any other part thereof or interfere with any openings in such roof.

2. Clearance from Roof. If it is the determination of the Director or City Fire Chief that a roof sign may impede accessibility to the roof for fire suppression purposes, such sign shall be constructed so as to leave a clear space of not less than 4 feet between the roof level and the lowest part of the sign and at least 5 feet of clearance between the vertical supports thereof.

3. Projection from Building Wall. No roof sign, attachments, thereof, or sign structure of such sign shall project beyond the exterior building wall or parapet.

4. Illumination. A roof sign may be reflectively illuminated, internally illuminated, or directly illuminated through the utilization of neon lighting. No roof sign or part thereof shall be a flashing sign.

5. Height. The height of any roof sign shall not exceed 12 feet above the roof line of the building.

H. Projecting Signs.

1. A projecting sign is permitted only within the special sign districts identified in s. 16.16.090.

2. One projecting sign per business in lieu of a permitted wall sign for a single business tenant building. For multiple business tenant buildings, one projecting sign may be allowed per business in addition to the number of wall signs that are permitted; subject to approval of a signing plan as provided in 16.16.070 A. 5. The combined square footage of signs for a business shall not exceed the square footage allowed for the wall frontage of such business. Businesses abutting more than one street frontage may erect an additional sign as a projecting sign along each additional frontage subject to the approval of the signing plan. A spacing of at least 15 feet shall be provided between any projecting signs an any sign that requires a sign permit that is on an abutting parcel.

3. A projecting sign shall have a maximum of 2 sign faces oriented parallel to one another, with each sign face not exceeding 20 square feet in area.

4. Signs may be lighted using reflected illumination, with such fixtures not extending further than the street side edge of the sign from the building wall and designed with shielding that directs the light only onto the sign face and which prevents any glare along the street or sidewalk. Other types of illumination may be approved upon review of a signing plan by the plan commission pursuant to the provisions of s. 16.16.070 A. 5.

5. Projecting signs may project into the public right-of-way and have a maximum projection of 5 feet from the building wall, but in no case closer than 2 feet to the curb.

6. A minimum clearance of 8 feet from the bottom of any portion of the sign or structure to the sidewalk shall be provided. The highest point of the sign and its supporting frame shall be no higher than the top of the second-story windowsill of the building. The second floor windowsill of adjacent buildings shall be the maximum height for buildings of 2 or more stories not having second floor windows. For a single story building, the sign and supports shall not extend above the top cornice line of the building.

7. A sign shall be attached to the building wall in such a fashion that it shall not swing. In addition, guy wires shall not be utilized in its installation, and any brackets, supports, or bracing shall be an integral part of the design of the sign or sign structure. If deemed necessary by the director, an additional plan may be required which sets forth the detail of the wall anchoring specifications for a sign that certifies that the sign and building wall will withstand required wind loads.

8. The sign face shall be made of a solid material such as wood, metal, high-density urethane, sign foam, or similar type material, with the sign structure made of finished metal. The sign shall not be designed in a manner having replaceable sign faces that are inserted or affixed to a sign cabinet.

9. The plan commission may approve a conditional use permit pertaining to the reduction of the spacing between signs, the height of the sign in relation to the second-story windowsill, an additional sign face on the street facing side of the sign, or exceeding the size provisions only if the applicant can demonstrate that the standard is not adequate due to the unique characteristics of the building, such as the building's scale, design, height, desire to list multiple businesses on one sign, or number of commercial tenants.

10. At the time a sign permit application is submitted, the owner or tenant of the building shall provide proof of property and comprehensive liability insurance in an amount and form approved by the city attorney.

I. Changing Signs.

1. Construction. Changing signs shall be constructed as either a wall or ground sign. If constructed as a ground sign, it shall be permitted in conjunction with a permitted business or identification

sign subject to the provisions for ground signs and the respective zoning district or sign district, but shall not exceed 50 percent of the total sign area of such sign.

2. Electronic Message Center Signs.

a. Electronic message center signs are permitted on parcels zoned C-2, C-2P, C-3, C-3P, CBD, CBDP, I-1, I-1P, I-2, I-2P, and P subject to the provisions of 16.16.080 and, as set forth below, and subject to health, safety, and welfare standards applicable to any such sign in any district, and on parcels zoned residential, as set forth in s. 16.16.080 A. 8.

i. A text message may scroll or appear to travel horizontally or vertically on the sign face at a constant speed, but no part of the message or display shall flash, blink, or use any other form of animation, nor shall the background for such message use any form of animation.

ii. Static displays on such signs shall be displayed for at least two seconds and the change or transition from one display or message to the next shall occur as quickly as possible.

iii. No such sign shall be illuminated to a degree of brightness that constitutes a nuisance or public safety hazard. Between dusk and dawn, the brightness of such sign shall be set at no more than 50% of the sign's maximum brightness, and the city reserves the right to require that the brightness of the sign be adjusted if it is deemed to be a public nuisance or a distraction to motorists.

b. A conditional use permit shall be required if any of the following circumstances apply. After application pursuant to s. 18.35.020, the plan commission may grant a conditional use in accordance with the provisions contained in chapter 18.35. The commission, as set forth in s. 18.35.030, may attach certain conditions to the conditional use relating to the operation of such signs.

i. <u>If an electronic message center sign is proposed to be located within the Downtown Eau Claire Sign District, Washington Street Sign District, or Water Street Sign District.</u> The plan commission shall consider whether such sign is compatible and consistent with the architecture, scale, and design of the building, is appropriate for the character of the street setting in which it is to be located, and does not diminish the appearance or integrity of neighboring buildings, signs, or the sign district as a whole.

ii. <u>If more than one electronic message center sign is proposed for a parcel.</u> When considering such conditional use, the plan commission shall consider whether the size or scale of the parcel or building is of such exceptional size that more than one such sign is warranted and will not create or add to sign clutter in the area or conflict with signs in the area. Additionally, the committee may consider the following factors: sign size, height, setback, location on the building relative to its architectural design (for walls signs), proximity of the message center signs, and need for multiple signs as identified by the applicant. Signs using a message center display which shows only time and temperature information, motor fuel pricing, or are classified as informational and directional signs as set forth in s. 16.16.120, are permitted in addition to the number limitations for primary wall or ground signs set forth above.

iii. <u>If any electronic message center sign is located closer than 200 feet to another electronic message center sign or closer than 100 feet to any traffic control signal.</u> The applicant shall satisfy to the plan commission that such sign will not interfere with or confuse motorists, and will not create any traffic safety problem along the street on which it is located.

iv. <u>If any electronic message center sign erected as a wall sign exceeds 50 square feet in size.</u> When reviewing such conditional use, the plan commission shall consider whether such sign is compatible and consistent with the architecture, scale, and design of the building, is appropriate for the character of the street setting in which it is to be located, and does not diminish the appearance or integrity of neighboring buildings and signs.

v. For a temporary commercial attraction as set forth in s. 16.16.110 N. The Plan Commission may grant a conditional use permit for a changing sign attached to a stationary vehicle or trailer which advertises such events. In addition to the provisions of Chapter 18.35, the Plan Commission will consider such factors as size of the sign, setback, orientation in relation to the right-of-way, traffic volumes, compatibility with neighboring properties, hours of operation of the sign, and number of days of the event.

c. An electronic message center sign existing on January 22, 2008 which is not in conformance with these provisions shall be considered a legal, non-nonconforming sign subject to s. 16.16.140. (Repealed and recreated Ord. 7246, 2017; Ord. 7216, §1 2017; Ord. 7165, 2015; Ord. 7058 §§1, 3, 2013; Ord. 7057 §2, 2013; Ord. 7018, §1, 2012; Ord. 6989, §1, 2011; Ord. 6965, 2011; Ord. 6809 §2, 2008; Ord. 6590 §1, 2005; Ord. 6538 §1, 2004; Ord. 5933 §§3, 4, 5, 1999; Ord. 5674 §1, 1996; Ord. 4823, 1988).

<u>16.16.080 Provisions for Signs by Zoning District</u>. On-premise signs shall be permitted as set forth below by zoning district. Additional on-premise signs may be allowed as set forth in s. 16.16.090 through s. 16.16.120.

A. Signs in the Residential Districts. Within the R-1A, R-1B, R-1R, R-1, R-2, RM, R-3, R-4 and NCD Residential districts identified in Title 18 of the City's Municipal Code, signs shall be allowed as follows. Such signs shall be either wall or ground signs and, if illuminated, may be illuminated by only reflective or internal sources of light. Any ground sign shall not exceed 6 feet in height and not be located closer than 10 feet to

any property line. These provisions shall apply unless otherwise stated herein or in any other section of this Chapter.

1. Day Care Centers. One non-illuminated sign not exceeding 3 square feet in area ~~for~~ at any day care center.

2. Community Based Residential Facilities. Signs at a community based residential facility (CBRF) shall be as follows:

a. CBRF's licensed for 5 or less residents may install one non-illuminated sign not exceeding 3 square feet in size.

b. CBRF's licensed for 6 or more residents may install one non-illuminated sign not exceeding 9 square feet in size.

3. Fraternities and Sororities. One non-illuminated sign not exceeding 3 square feet in area at a fraternity or sorority house.

4. Multiple Family Residential Projects. One sign per street frontage not exceeding 9 square feet in area for a multiple family building containing more than 5 residential units. For multiple family developments which consist of multiple buildings or more than 15 residential units, one sign per street frontage not exceeding 32 feet in area may be erected.

5. Mobile Home Parks. One sign not exceeding 32 square feet in area at each major entrance to any mobile home park.

6. Other Non-Residential Principal Uses. One sign may be erected on a premise that has non-residential principal uses which are permitted by right or by conditional use permit within the respective zoning district and which are being conducted on such premise. If a premise abuts more than one street, one sign may be erected along each street frontage, if each sign is designed to be seen primarily from a different street frontage. The copy area of any sign shall not exceed 32 square feet in area; however, for any use approved by conditional use permit, the Plan Commission may require a sign having a smaller copy area as a condition of approval.

7. The Plan Commission may grant a conditional use permit in accordance with the provisions for granting such permits in Title 18 for: additional signs; a sign exceeding 32 square feet in copy area; or a ground sign exceeding 6 feet in height. The Plan Commission may grant such conditional use permit only if the applicant can demonstrate that the standards set forth for number of signs, copy area, or height are not adequate due to unique characteristics of the premise, such as the location and orientation of buildings on the site, large size of the premise, multiple entries to the premise or building, and scale of the building on the site.

8. The Plan Commission may grant a conditional use permit to allow a light emitting diode (LED) electronic message center sign as part of a permitted ground sign for a non-residential principal use that is allowed in the residential zoning districts by right or by conditional use only if the applicant demonstrates that the following standards are met.

a. The subject property must abut or be directly across a public right-of-way from a property zoned C-2, C-2P, C-3, C-3P, I-1, I-1P, I-2, or I-2P and such sign shall be located along the same street frontage as the abutting or adjacent commercially or industrially zoning property.

b. The subject property must abut a principal arterial street as identified in the Eau Claire comprehensive plan and such sign shall be located along the principal arterial street frontage that the premise abuts.

c. Between dusk and dawn, the brightness of the LED electronic message center sign shall be set at not more than 50% of the sign's maximum brightness. The plan commission can stipulate additional dimming of such sign if the sign's brightness or glare causes a disturbance or distraction.

d. The display or message of the LED electronic message center, which could include words, letters, use of color, symbols, or pictures shall remain fixed and not flash, scroll, travel, or appear to move in any fashion. Such display or message shall not change more frequently than once every two seconds, and change or transition from one display or message to the next shall occur as quickly as possible, with the entire display turned off at once and the following display appearing instantaneously, with no transition such as fading, dissolving, scrolling, or other effects to depict movement, animation, or any special visual effect. When considering such conditional use, the Plan Commission may require a greater length of time for the message to be displayed if the Commission determines that such two second minimum display time may have a negative effect on adjoining or abutting properties, will interfere with or distract traffic, or endanger public health or safety in any fashion.

e. The sign area of the LED electronic message center shall not exceed 50 percent of the total sign area of the ground sign to which it is attached.

f. Not more than one LED electronic message center sign is allowed per property.

g. The LED electronic message center will not interfere with or be distracting to traffic on or off the premise, or endanger public health or safety in any fashion, will not disturb or disrupt surrounding residential areas due to brightness or glare of the lighting mechanism and is in keeping with the size and scale of premise and principal building.

B. Signs in the C-1A District. Within the Office/Professional District identified in Title 18, signs shall be permitted subject to the provisions stated herein; such signs may be illuminated by reflected or internal sources of light.

1. Converted Residences. One wall sign not exceeding 20 square feet in copy area shall be permitted for any principal building which has been converted from a residential use to a non-residential use. A ground sign not over 20 square feet in copy area and 6 feet in height is permitted in lieu of a wall sign if a conditional use permit is granted by the Plan Commission in accordance with the provisions for granting a conditional use permit in Title 18.

2. Other Structures. One wall, awning or ground sign shall be permitted for each principal building where the building has been constructed for business use. Such sign shall not exceed 50 square feet in copy area and the height of a ground sign shall not exceed 15 feet subject to the setback requirements of Title 18. Such ground sign may be placed up to 10 feet within the setback required in Title 18 which is adjacent the street, provided the sign does not exceed 32 square feet in copy area and 6 feet in height, and is no closer than 10 feet to the property line.

3. Multiple Signs. A conditional use may be granted by the City Plan Commission in accordance with the provisions for granting a conditional use permit in Title 18 to permit more than one sign for each principal building in which a business is operated or for greater copy area than allowed herein.

4. Residential Uses. Signs for residential uses located within this zoning district shall conform to the provisions of s. 16.16.80 A.

C. Signs in the C-1 and C-2 districts. Within the C-1 and C-2 zoning districts identified in Title 18, signs shall be permitted subject to the provisions stated herein and may be illuminated by reflected, internal, or direct sources of light.

1. Wall Signs.

a. Number of Signs. Number of wall signs permitted for a premise shall be as follows: (1) Single Tenant Buildings. Principal buildings constructed for occupancy for one tenant are allowed the following number of wall business signs:

i. Two signs for each street frontage the principal building abuts;

ii.One additional sign may be erected on a building wall exceeding 150 feet in length which abuts a street;

iii. One additional sign may be erected on a building wall having a public entrance which does not abut a street.

(2) Multiple Tenant Buildings. The following number of wall signs and their placement shall be as set forth below or as approved by a signing plan in s. 16.16.070 A. 5 for principal buildings constructed for occupancy for two or more business tenants;

i. Tenants which have a public entrance only by means of a hallway, corridor, or mall thus having no public entrance in an exterior wall providing direct access to such tenant shall be permitted one wall sign for each street frontage which the owned or leased premise abuts. Tenants whose occupancy does not have an exterior building wall abutting a street may be permitted one sign as approved by a signing plan in s. 16.16.070 A. 5.;

ii. Tenants having a public entrance in an exterior wall which provides direct access to such tenant shall be permitted one sign for each such public entrance on such wall, plus one wall sign for any exterior wall abutting a street which has no public entrance;

iii. A tenant having exterior walls exceeding 150 feet in length and which abut a street may erect one additional sign on such wall; sign on such wall;

iv. A shopping center having more than four tenants may erect one sign at each public entrance which provides access to a hallway, corridor, or mall from which access to the tenants is provided.

b. Copy Area. The total copy area of all wall signs on a building wall shall not exceed 2 square feet for each lineal foot of building wall to which the signs are to be attached, and in no case shall any individual sign exceed 150 square feet in area.

c. Signs Erected in Lieu of Wall Signs. A canopy sign, marquee sign, awning sign, or projecting sign may be erected in lieu of a wall sign. The maximum copy area of such signs shall be calculated the same as for a wall sign.

d. Signs Erected in Lieu of Ground Signs. In addition to the wall signs permitted herein, upon approval of a sign plan by the Plan Commission as provided in s. 16.16.070 A. 5., one additional wall sign may be erected in lieu of a ground sign which would be permitted on the premise. This provision shall not be applicable within the Downtown Eau Claire Sign District and Water Street Sign District or where the Plan Commission makes a determination that placement of a ground sign on the premise is not practical due to such factors as: building coverage or location on the parcel, required setback standards, proximity from other ground signs and buildings, vehicle parking and circulation on the premise, and topography of the parcel. The owners or tenants of the premise shall waive the right to erect a permitted ground sign if a wall sign is erected in accordance with this provision.

2. Ground Signs. One ground sign may be erected for each principal building. Principal buildings on lots abutting more than one street may have one ground sign located on each street frontage if such signs are designed to be read from only one frontage.

Ground signs shall not exceed 25 feet in height and 150 square feet in copy area. Except as provided below, such signs shall comply with the setback provisions set forth in Title 18.

A monument style sign may be erected up to 10 feet within the setback required in title 18 which is adjacent a street for a building occupied solely by any principal permitted or conditional use identified in the C-1A district under Title 18. Such sign shall be in lieu of any ground sign permitted for the street frontage, shall not exceed 32 square feet in copy area or 6 feet in height, and in no case shall be closer than 10 feet to the property line adjacent the street.

3. Residential Signs. Signs for the residential uses located within such zoning districts shall conform to the provisions of s. 16.16.80 A.

D. Signs in the C-3, I-1, I-2, CBD and CBDP Districts. Within the C-3, I-1, I-2, CBD and CBDP zoning districts identified in Title 18, signs shall be permitted subject to the provisions stated herein and may be illuminated by reflected, internal, or direct sources of light.

1. Wall Signs.

a. Number of Signs. The provisions of s. 16.16.080 C. 1. a. shall apply.

b. Copy Area. The total copy area of all wall signs on a building wall shall not exceed 2.5 square feet for each lineal foot of building wall to which the signs are to be attached, but in no case shall any individual sign exceed 250 square feet in area.

c. Signs Erected in Lieu of Wall Signs. A canopy sign, marquee sign, awning sign, or projecting sign may be erected in lieu of a wall sign. The maximum copy area of such signs shall be calculated the same as for a wall sign.

d. Signs Erected in Lieu of Ground Signs. The provisions of s. 16.16.080 C. 1.d for an additional wall sign in lieu of a permitted ground sign shall apply subject to the copy area provisions set forth herein.

2. Ground Signs. Ground signs shall be set back from all property lines as provided within Title 18 except as set forth herein and shall be subject to the following:

a. Number of Signs. One ground sign may be erected for each principal building. Principal buildings on lots abutting more than one street may have one ground sign located on each street frontage if such signs are designed to be read from only one frontage.

b. Copy Area. A ground sign shall have a maximum copy area of 200 square feet. Ground signs may be allowed up to 400 square feet in copy area if a conditional use permit is approved by the Plan Commission in accordance with Title 18. The conditional use permit shall be approved only if the Plan Commission finds that such sign: will be compatible with surrounding ground signs and the street setting in which it is to be located; will not create or add to sign clutter within the area; will not interfere with or confuse motorists or pedestrians; and is consistent and compatible with the scale of the buildings on the premises. In the review of such conditional use permit application, the Plan Commission shall consider such factors as: proximity of the proposed sign to other ground signs, size of other ground signs in the vicinity, square footage, location, and height of the principal building on the premises, amount of frontage the premises has along the public right-of-way, and setback of the proposed sign from the public right-of-way.

c. Height. The maximum height for a ground sign erected less than 30 feet from the public right-of-way shall be 10 feet above the roof line of the principal building or 40 feet, whichever is less; but in no case shall the maximum height limit be less than 25 feet. Ground signs setback 30 feet or more from the public right-of-way shall not exceed 40 feet in height.

d. Setback allowance. A monument style sign may be erected up to 10 feet within the setback required in Title 18 which is adjacent a street for a building occupied solely by any principal permitted or conditional use identified in the C-1A district under Title 18. Such sign shall be in lieu of any ground sign permitted for the street frontage, shall not exceed 32 square feet in copy area or 6 feet in height, and in no case shall be closer than 10 feet to the property line adjacent the street.

3. Residential Signs. Signs for residential uses located within such districts shall comply with the provisions of s. 16.16.80 A.

E. Signs in the Highway District. Within the Highway District identified in Title 18 of the City Code of Ordinances, signs shall be permitted in accordance with the provisions of the underlying zoning district as set forth in this Chapter with the exception of setbacks for which the provisions of the Highway District shall apply. However, a setback allowance for monument style signs shall be permitted as provided in s. 16.16.080 D.2.d. for such uses listed therein.

F. Signs in the Public and Conservancy Districts. Within the Public and Conservancy Districts identified in Title 18 of the City Code of Ordinances, permitted signs shall be only those duly authorized and erected by a public agency for the purpose of information, regulation, warning, or direction.

G. Signs in the Planned Development District. Within the Planned Development District identified in Title 18, signs shall be permitted in accordance with such requirements as made part of the General

Development Plan and final implementation for the development. However, in no case shall the sign area and height of any sign within a planned development exceed the maximum sign area and height established in the underlying district for that type of sign. (Repealed and recreated Ord. 7246, 2017; Ord. 7216, §2 2017; Ord. 7057 §1, 2013; Ord. 7006 §1, 2012; Ord. 6830, 2008; Ord. 6681, 2006; Ord. 6389, 2003; Ord. 5184 §§2, 3, 1991; Ord. 4823, 1988).

16.16.090 Special District Sign Regulations. The City Council may establish sign regulations which differ from the provisions of this Ordinance for a designated area within the City. Such districts shall be of substantial size, and possess certain unique characteristics to warrant sign regulations which differ from one or more of the provisions of this Chapter. A map defining the district and special regulations, which may modify certain defined provisions of this Chapter, will upon approval by the City Council, be made part of this Chapter and shall be kept on file in the office of the Department of Community Development.

If, and to the extent that, special district regulations are approved by the City Council, such regulations shall be observed by the persons affected in lieu of compliance with the provisions of this Chapter. However, those provisions of this Chapter which are not affected by the special district sign regulations shall continue to apply in the designated district. Nothing in this section or elsewhere in this Chapter shall prevent the establishment of special district sign regulations which are more stringent than those set forth in this Chapter.

A. Central Business District Sign District. In accordance with the above provisions, there is hereby established a special sign district known as the Central Business District Sign District (CBD). The boundaries of the CBD shall be defined on the map titled Central Business District Sign District which is adopted as part of this Chapter. Said maps shall be kept on file in the office of the Department of Community Development and open to inspection during normal business hours. Except as modified below or otherwise specified, the provisions of this chapter shall apply to the area defined by this special district.

1. Illumination. Signs within the Central Business District Sign District may be illuminated by reflected, internal, or direct source of light, except as provided in s. 16.16.070 H. Flashing signs and animated signs shall be permitted in accordance with the provisions of s. 16.16.070 B. 5.

2. Wall Signs. The total allowable copy area of wall signs on a building wall shall not exceed 3 square feet for each lineal foot of building wall to which the signs are to be attached, with no individual sign exceeding 100 square feet in area. Wall signs greater in size may be allowed if a conditional use permit is approved by the plan commission in accordance with Title 18. The conditional use permit shall be approved only if the plan commission finds that such sign: will be compatible with surrounding signs and the street setting in which it is to be located; will not create or add to sign clutter within the area; will not interfere with or confuse motorists or pedestrians; and is consistent and compatible with the scale of the buildings on the premise. In the review of such conditional use permit application, the plan commission shall consider such factors as: proximity of the proposed sign to other signs, size of other signs in the vicinity, location on the building, scale and height of the building, and setback of the proposed sign from the public right-of-way. The number and placement of wall signs for each principal building shall be as provided in s. 16.16.080 C. 1. a. A canopy sign, marquee sign, awning sign, or projecting sign may be erected in lieu of a wall sign and the allowable copy area and maximum copy area thereof shall be calculated as a wall sign.

3. Ground Signs. One ground sign not exceeding 150 square feet in area and 35 feet in height may be erected for each principal building. Such sign shall be subject to the setback requirements of Title 18. If a ground sign is located within the vision triangle, the provisions of s. 16.16.070 D. 4. shall not apply; however, such sign shall not be erected in such a manner as to obstruct free and clear vision at such street intersection.

4. Roof Signs. One roof sign not to exceed 100 square feet in area may be erected for each principal building in lieu of a ground sign.

5. Residential Signs. Signs for residential uses located within this district shall conform to the provisions of 16.16.80 A.

6. Theater Signs. The Plan Commission may grant a conditional use permit in accordance with the provisions of Title 18 to allow a marquee sign or projecting sign for a theater which reflects documented historic elements of signing used for the building prior to 1950. Such marquee sign or projecting sign may exceed the copy area limitations set forth for an individual sign in the Central Business District Sign District and the height provisions for marquee signs set forth in s. 16.16.070 E. 2. In review of such conditional use permit, the applicant must provide the Commission with photographs of the facade of the building which illustrates the historic signs which the applicant proposes to duplicate in some manner. A projecting sign may extend above the roof line of the building to which it is attached and extend in to the public right-of-way no more than 8 feet or within one foot of the curb, whichever is less.

B. Downtown Eau Claire Sign District. In accordance with the provisions of this section, there is hereby established a special sign district known as the Downtown Eau Claire Sign District. The boundaries of the district shall be defined on the map titled Downtown Eau Claire Sign District, which is adopted as part of this chapter and kept on file in the office of the Department of Community Development. Except for the

allowances listed below, the underlying sign code requirements that are applicable within the boundary of the district shall continue to apply.

1. Projecting signs shall be permitted in the Downtown Eau Claire Sign District in accordance with the provisions set forth in s. 16.16.070 H. Such signs shall be permitted in areas zoned C-3, CBD, and CBDP, as set forth in Title 18.

2. Decorative Building Lighting. Wall mounted sconces or gooseneck style lighting fixtures used primarily for decorative building lighting purposes may extend into the public right-of-way and have a maximum projection of 36 inches from the building wall to which it is attached, but in no case extend closer than 2 feet to the curb. Such lighting shall be designed to prevent any glare visible from the street or prevent any public safety hazard, and shall be at least 10 feet above grade before extending into the public right-of-way.

3. Sidewalk Signs. Sidewalks signs shall be permitted in the Downtown Eau Claire Sign District in accordance with the provisions set forth in s. 16.16.110 B. Such signs shall be permitted in areas zoned C-3, CBD, and CBDP, as set forth in Title 18.

4. Flags. Wall mounted flags, as set forth in s. 16.16.120 B., may extend into the public right-of-way in the Downtown Eau Claire Sign District, but in no case closer than 2 feet to the curb. The flagpole or mast and fabric thereof shall be at least 8 feet above grade before extending into the public right-of-way. Such flags shall be permitted to extend into the public right-of-way only in those areas zoned C-3, CBD, and CBDP, as set forth in Title 18.

C. Water Street Sign District. In accordance with the provisions of this section, there is hereby established a special sign district known as the Water Street Sign District. The boundaries of the district shall be defined on the map titled Water Street Sign District, which is adopted as part of this chapter and kept on file in the office of the Department. of Community Development. Except for the allowances listed below, the underlying sign code requirements that are applicable within the boundary of the district shall continue to apply.

1. Projecting signs shall be permitted in the Water Street Sign District in accordance with the provisions set forth in s. 16.16.070 H. Such signs shall be permitted in areas zoned C-2, C-2P, CBD, and CBDP, as set forth in Title 18.

2. Decorative Building Lighting. Wall mounted sconces or gooseneck style lighting fixtures used primarily for decorative building lighting purposes may extend into the public right-of-way and have a maximum projection of 36 inches from the building wall to which it is attached, but in no case extend closer than 2 feet to the curb. Such lighting shall be designed to prevent any glare visible from the street or prevent any public safety hazard, and shall be at least 10 feet above grade before extending into the public right-of-way.

3. Sidewalk Signs. Sidewalk signs shall be permitted in the Water Street Sign District in accordance with the provisions set forth in s. 16.16.110 B. Such signs shall be permitted in areas zoned C-2, C-2P, CBD, and CBDP, as set forth in Title 18.

4. Flags. Wall mounted flags, as set forth in s. 16.16.120 B., may extend into the public right-of-way in the Water Street Sign District, but in no case closer than 2 feet to the curb. The flagpole or mast and fabric thereof shall be at least 8 feet above grade before extending into the public right-of-way. Such flags shall be permitted to extend into the public right-of-way only in those areas zoned C-2, C-2P, CBD, and CBDP, as set forth in Title 18.

D. Washington Street Sign District. In accordance with the provisions of this section, there is hereby established a special sign district known as the Washington Street Sign District. The boundaries of the district shall be defined on the map titled Washington Street Sign District, which is adopted as part of this chapter and kept on file in the office of the Department of Community Development. Except for the allowances listed below, the underlying sign code requirements that are applicable within the boundary of the district shall continue to apply.

1. Projecting Signs shall be permitted in the Washington Street Sign District in accordance with the provisions set forth in s. 16.16.070 H.

2. Decorative Building Lighting. Wall mounted sconces or gooseneck style lighting fixtures used primarily for decorative building lighting purposes may extend into the public right-of-way and have a maximum projection of 36 inches from the building wall to which it is attached, but in no case extend closer than 2 feet to the curb. Such lighting shall be designed to prevent any glare visible from the street or prevent any public safety hazard, and shall be at least 10 feet above grade before extending into the public right-of-way.

3. Sidewalk Signs. Sidewalks signs shall be permitted in the Washington Street Sign District in accordance with the provisions set forth in s. 16.16.110 B.

4. Flags. Wall mounted flags as set forth in s. 16.16.120 B. may extend into the public right-of-way in the Washington Street Sign District, but in no case closer than 2 feet to the curb. The flagpole or mast and fabric thereof shall be at least 8 feet above grade before extending into the public right-of-way. (Repealed and recreated Ord. 7246, Ord. 7058 § 2, 2013; Ord. 7018 §2, 2012; Ord. 6989 §3, 2011; Ord. 6912,

2010; Ord. 6627 §2, 2005; Ord. 6590 §2, 2005; Ord. 6538 §2, 2004; Ord. 5933 §§6, 7, 1999; Ord. 5032 §§2, 3, 4, 5, 6, 7, 8, 1990; Ord. 4823, 1988).

16.16.100 Special Use Signing. This additional signing shall be allowed subject to the following requirements, and shall be illuminated as set forth in the zoning district or sign district such sign is located, unless otherwise provided herein.

A. Businesses with drive up windows. For any business having a drive-up window; additional ground or wall signs shall be permitted in conjunction with such service upon approval by the Plan Commission in accordance with s. 16.16.070 A. 5. Such sign(s) shall not exceed 40 square feet in area and, if a ground sign, shall not exceed 8 feet and in height. The sign(s) shall comply with all provisions pertaining to wall or ground signs for the district in which it is to be located, except for the spacing requirement set forth in s. 16.16.070 D. 1.

B. Barber Shops. One wall mounted barber pole shall be permitted for each barber shop or hair salon. Such device may not exceed 3 feet in length and 1 foot in width. Such device may project over public right-of-way a distance not to exceed 18 inches, provided that it is located at least 7 feet or more above the sidewalk grade.

C. Overhead Street Banners. Overhead banners or signs made of fabric or canvas or other cloth or plastic materials may be erected temporarily across or along streets and alleys or parts thereof only upon approval by the City Manager.

It is the purpose and intent to permit only such banners or signs which are in connection with civic and charitable undertakings or conventions of a community-wide interest. The type, height, and manner of installation of any such banner or sign shall be reviewed and approved by the Administrator prior to granting of the permit required hereunder so that the general health, safety and welfare is protected.

Such permit shall be issued only upon application in writing filed with the City Clerk or the City Clerk's designee at least 10 days prior to the proposed installation, which shall prescribe the terms and conditions thereof. Application for permit shall be accompanied by a public liability insurance policy as specified in s. 16.16.170.

D. Motor Vehicle Dealerships. 1. Upon application, the Plan Commission may consider one additional ground sign for any motor vehicle dealership. When considering the application, the commission shall consider such factors as:

a. Proximity of the proposed sign to other ground signs.

b. Square footage, location and height of the principal building(s) on the premises.

c. Parcel size and amount of frontage along the public right-of-way; and

d. Setback of the proposed sign from the right-of-way.

2. The commission may grant the application by conditional use permit for the additional sign if the commission finds that the applicant has demonstrated that the additional sign:

a. Will not create or add to sign clutter in the area.

b. Is consistent and compatible with the scale of the building(s) on the motor vehicle dealer's premises.

c. Is warranted due to the size of the parcel occupied by the dealership.

d. Complies with the regulations in section (3.) herein.

3. The additional sign permitted shall not exceed 100 square feet in area and shall comply with all provisions pertaining to ground signs and the zoning district or sign district in which it is located.

E. Motor Fuel Pump Island Canopy Signs. For any motor fuel pump island canopy, one sign may be displayed flat against each side of the canopy of such structure. Such signs may not extend above or below such canopy.

F. Theaters. Theaters, public meeting halls, convention centers, arenas and auditoriums may erect one changing sign not exceeding 60 square feet in area, except as provided in s. 16.16.090 A. 6., as a wall or marquee sign. Such sign shall be in addition to allowable wall sign area provisions of the respective zoning district or sign district.

G. Plat-Subdivision-Planned Developments. A sign for a residential subdivision, office park, business park, industrial park, or planned development shall be permitted provided the sign:

1. May only be erected at a maximum of two major entrances of the development. "Major entrance" means a public or private street that provides access to more than 10 residential lots or premises or more than 5 non-residential lots or premises.

2. Shall be approved by the Director with appeal to the Plan Commission or in the case of a planned development; shall be made part of the Final Implementation Plan of such development.

3. For residential developments shall be only of a monument style, shall not exceed 32 square feet in copy area and 6 feet in height, shall be illuminated only by reflected white lighting which is located on the ground and concealed by appropriate landscaping, and which does not shine or glare upon any adjacent dwelling or right-of-way. Such sign shall not be closer than 5 feet from any property line, subject to the provisions for vision triangle.

4. For developments other than residential or mixed use, shall not exceed 15 feet in height, with a sign or copy area not greater than 100 square feet in area and may be illuminated internally or by reflected white lighting which is located on the ground and concealed by appropriate landscaping, and which does not shine or glare upon any adjacent building or right-of-way. Such sign shall comply with the setback provisions of the district it is located in.

H. Businesses with Outside Product Displays. Within the C-3 and C-3P zoning districts, the plan commission may grant a conditional use permit for one or more additional signs or permanent banners for a premise that has a product display that is located outside of the principal building. To grant the conditional use permit, the applicant must prove to the plan commission's satisfaction that the additional sign will not create sign clutter on the premise or abutting premises, the size and scale of the premise and principal building warrants the additional sign, the number of signs requested is the minimum necessary to denote the display area, the sign will not interfere with traffic circulation on or off premise or endanger public health or safety, and applicant's need to erect a sign for an outside product display outweighs the burden on the public. Such signs granted a conditional use permit shall be subject to the following conditions and such other conditions reasonably imposed by the plan commission:

1. The display area where the product is displayed must exceed 20,000 square feet in size;

2. The sign shall be located within the perimeter of the display and subject to all setback provisions of the premise;

3. The sign shall not be illuminated and shall not exceed 24 square feet in size; and

4. The sign shall be secured to prevent it from moving from the wind or other means. If deemed necessary by the director, the applicant must verify that the addition of such sign to an existing structure will comply with wind load requirements of this chapter.

I. Shopping Centers. Upon approval of a sign plan by the Plan Commission as set forth in s. 16.16.070 A. 5., additional wall signs may be erected at each major entrance of a shopping center where such entrance provides access to an interior hallway, or common area for the center's tenants. Such additional signs shall not exceed the maximum copy area for wall signs individually or cumulatively as set forth in s. 16.16.080 C. 1. b. and s. 16.16.080 D. 1. b.

J. Under Canopy or Marquee Sign. One sign per business establishment may be suspended from or attached to the underside of a canopy or marquee which abuts such business provided said sign extends no more than 1 foot from the underside of the canopy or marquee or closer than 9 feet from the sidewalk grade and does not exceed 8 square feet in area. Such sign may be illuminated by reflective or internal means. (Repealed and recreated Ord. 7246, Ord. 7018 §2, 2012; Ord. 7006 §2, 2012; Ord. 6956, 2011; Ord. 6590 §3, 2005; Ord. 5933 §8, 1999; Ord. 5845, 1998; Ord. 5757 §1, 1997; Ord. 4823, 1988).

16.16.110 Temporary Signs. The following temporary signs shall be permitted as wall or ground signs unless otherwise noted in addition to the signs allowed within other sections of this Chapter according to the provisions and table herein. Such signs shall be subject to all provisions of this Chapter unless otherwise specified herein and any such sign erected as a ground sign shall be exempt from the landscaping and spacing requirements pertaining to such signs. Sign permits shall be required for those temporary signs indicated in the table herein. Such permits shall be issued in accordance with the provisions set forth in 16.16.040.

A. Public Safety or Governmental Related Temporary Signs. The following temporary signs provide some form of public safety-related function or provide information pertaining to a governmental function or interest:

1. Building Active Permit Signs. Such sign may be erected on the premise where a building permit has been issued and construction activity is taking place. Such sign shall not be erected prior to issuance of a building permit or other appropriate permits for the proposed construction. It shall be removed upon completion of said construction.

2. Election Campaign Period Signs. Election campaign period signs shall be removed within 10 days following such election to which it relates. The owner of the property upon which said signs are placed shall be responsible, together with the person or entity authorizing and paying for such sign, for the compliance of these provisions These provisions shall not restrict the use of election campaign advertising on existing poster panels, in which case the provisions of Chapter 16.18 apply.

3. Plat Development Signs. A sign may be displayed in a subdivision that is under development which contains ten or more lots or development areas, provided such sign is removed upon the development of 75 percent of the lots or areas within the subdivision or development.

B. General Purpose Temporary Signs.

1. Sale, rental, or lease. A sign may be erected on a premise that is for sale, lease, or rent provided such sign is removed within 10 days after the closing, lease, or rental of such property.

2. Residential Event Yard Sign. One sign may be erected on a residentially zoned property to accommodate limited duration events taking place on the property such as thrift sales, and open houses.

Thrift sales, rummage sales, garage sales, auctions, or other similar sales shall be limited to three times per year with each period not exceeding nine consecutive calendar days.

3. Grand Opening Decorations. Pennants, ribbons, spinners, search lights, balloons, and other similar devices may be displayed for a period not to exceed 16 calendar days while a business is conducting a grand opening. Balloon signs as described in paragraph 5 of this section may be displayed for a grand opening subject to the time limit stated herein.

4. Banners. A banner made of flexible materials, such as cloth, plastic, or vinyl may be displayed by a business at such business location. Such banners must be displayed flat on the wall of a principal building and only one banner may be displayed per building at any one time. The owner and tenants of a building shall limit the use of all banners on their building to a cumulative total of no more than 60 days per calendar year.

5. Balloon Signs. Helium, hot air, mechanically inflated or similar types of balloons may be displayed by a business at such business location not more than four times per year with each period not exceeding 3 calendar days. Such signs shall be placed on or affixed to the ground and meet the setback provisions from all overhead utility lines as well as from all property lines.

6. Special Event Signs. A sign or banner may be displayed by civic, educational, or religious organizations during the time such organizations are sponsoring a special event provided such sign or banner is displayed for a period not to exceed 16 calendar days.

7. Temporary Window Signs. Such signs shall be permitted except in the residential and C-1A zoning districts for each ground floor business establishment. The total area of such signs plus any permanent window signs shall not exceed a maximum of 40 percent of the window area to which such signs are attached.

8. Seasonal Sales Signs. A sign or banner may be displayed at the location of a sale of seasonal items such as fireworks, lawn and garden nursery stock, vegetable and fruit produce, and Christmas trees.

9. Temporary Commercial Attraction Signs. A sign or banner may be displayed for temporary events or attractions of a commercial nature such as carnivals, circuses, rodeos, flea markets, car shows, and other similar events. Such sign~~s~~ or banner may be displayed not more than seven days prior to such event or attraction and removed at its conclusion.

10. Outdoor Sales. Package labeling on goods and products displayed outside of a building is permitted provided such outdoor display is in compliance with Title 18. In addition, for any approved outdoors sales lot or area for such products as motor vehicles, boats, machinery and other similar products, information may be displayed directly on or within such products.

11. Sidewalk Signs. Sidewalk signs are permitted only within the special sign districts identified in s. 16.16.090 and are subject to the following:

a. One sign is permitted for each public entrance of a principal building and not more than one such sign per business establishment per street frontage. Sidewalk signs shall be placed directly adjacent to such public entrance. Such signs may be placed on either the public sidewalk or on private property.

b. Signs shall not exceed 10 square feet in size per side, and not more than 4 feet in height and 30 inches in width. The sign or parts thereof shall not be designed to move by any means, and windblown devices, including balloons and streamers, may not be attached or otherwise be made part of the sign.

c. Placement of such signs on a public sidewalk shall not interfere with or obstruct pedestrian and vehicular movement or obstruct designated ingress, egress, or fire exits from or to the building and, at a minimum, must provide at least 5 feet of contiguous clear or unobstructed pedestrian passage along the public sidewalk between the building and edge of the curb. For the purpose of this minimum clearance, parking meters, traffic signs, landscape planters, trees, hydrants, and all similar objects shall be considered obstructions.

d. Such signs shall not be placed closer than 2 feet to the curb and shall not block any handicapped ramp, driveway, alley, or crosswalk or be placed within any landscaped area. On corner lots such signs shall not be placed within an area bounded by the curbs along the intersecting streets and a line tangent to the intersection of the property lines abutting the street corner and extending to the curbs, with a tangent angle of 45 degrees with such property lines.

e. If placed on private property, such signs shall not be placed within a driveway or required parking space or interfere with pedestrian or vehicular circulation on the premise.

f. Signs shall not be anchored to the sidewalk or building in any fashion or attached or chained to poles, trees, hydrants, parking meters, newspaper vending boxes, or other structures or appurtenances.

g. Signs shall only be displayed during times that the business it is advertising is open and must be removed when the business is closed.

h. Signs shall not be lighted or electrified and shall not be affixed to or mounted

on wheels.

i. Signs shall be made of weather-resistant, durable materials and finish, and shall be kept in a good state of repair.

j. A temporary sign permit shall be obtained in accordance with the provisions of s. 16.16.040 prior to the display of any sidewalk sign. Such permit shall be effective for up to a three-year period, with the first such period commencing on January 1, 2014. To qualify for a three-year permit the applicant must, in addition to all other code requirements, have had no confirmed violations, permit revocations, or sign code related citations during the 12 month period prior to the start of the permit period, otherwise applicant shall obtain a permit on an annual basis.

k. The city reserves the right to immediately remove a sidewalk sign found to be in violation of any of these requirements. In addition, the city reserves the right to temporarily order the removal of a sidewalk sign from the public right-of-way for special events, including, but not limited to parades, sponsored runs or walks, or for public health and safety.

l. Any person, business, or organization erecting a sidewall sign shall indemnify and hold harmless the city and its officers, agents, and employees from any claim arising from the presence or placement of such sign. The person, business, or organization placing the sign shall sign an indemnification agreement, approved by the city attorney, prior to the issuance of a sign permit. The agreement shall be accompanied by evidence of property and comprehensive liability insurance in an amount and form approved by the city attorney covering the liability assumed by the display of the sign.

12. Residential Non-commercial Message Sign. One sign is permitted on a residentially zoned property to provide a non-commercial message. Such sign shall be either a wall, window, or ground sign. The display of such sign(s) shall be limited to a cumulative total of no more than 60 days per calendar year. (Repealed and Recreated 7246, 2017; Ord. 7058 §4, 2013; Ord. 6957, 2011; Ord. 6916, 2010; Ord. 6627 §3, 2005; Ord. 5993 §9, 1999; Ord. 5674 §2, 1996; Ord. 4823, 1988).

TEMPORARY SIGN REQUIREMENTS

Sign	Max. Sign Area	Min. Setback*	Max. Height	Illuminated	No. of Signs	Sign Permit Required
Building Permit Active						
Residential zones	12 sq. ft. for remodeling 32 sq. ft. for new construction	height of sign	6 feet	non-illuminated	1	No
Other zones	1 sq. ft. for each 2 ft. of frontage up to a max. of 128 sq. ft. per sign	10 feet	15 feet	non-illuminated reflected	1 per street frontage	No
Election Campaign Period	12 sq. ft. per sign**	height of sign	as specified for wall or ground signs	non-illuminated	no limit	No
Plat Development						
10 to 15 lots or development areas	32 sq. ft.	10 feet	10 feet	non-illuminated	1	Yes
16 or more lots or development areas	64 sq. ft.	10 feet	15 feet	non-illuminated	1	Yes
Sale, rental, or lease						
Residential uses	12 sq. ft. per sign	height of sign	6 feet	non-illuminated	1 per street frontage	No
Other uses	32 sq. ft. per sign	10 ft. unless a wall or window sign	15 feet	non-illuminated reflected	1 per street frontage	No
Residential Event Yard sign	12 sq. ft	height of sign	6 feet	non-illuminated	1 per street frontage	No
Grand Opening Decorations	not applicable	height of sign when ground mounted	as specified for wall or ground signs	non-illuminated reflected internal direct	no limit	Yes
Banner	10% of the area of the wall such banner is attached up to a max. of 100 sq ft.	as specified for wall signs	as specified for wall signs	non-illuminated reflected	1 per principal building	No

Sign	Max. Sign Area	Min. Setback*	Max. Height	Illuminated	No. of Signs	Sign Permit Required
Balloon Signs	no limit	height of balloon from ground	no limit; subject to setback requirements	non-illuminated reflected	1	Yes
Special Event	16 sq. ft. per sign	10 feet	6 feet	non-illuminated reflected	1 per street frontage	No
Temp. Window	such signs shall not occupy more than 40% of any one window, inclusive of all permanent window signs	not applicable	not applicable	non-illuminated reflected	no limit	No
Seasonal Sale	32 sq. ft. per sign	as specified for wall or ground signs	as specified for wall or ground signs	non-illuminated reflected internal	1 per street frontage	No
Temp. Commercial Attraction	66 sq. ft. per sign	as specified for wall or ground signs	as specified for wall or ground signs	non-illuminated reflected internal direct	1 per street frontage	No
Outdoor Sales	attached to product	as specified for wall or ground signs	not applicable	non-illuminated	no limit	No
Sidewalk Sign	10 sq. ft.	See standards	4 feet	non-illuminated	See standards	Yes
Residential Non-commercial Message Sign	12 sq. ft	height of sign	6 feet	non-illuminated	1 per street frontage	No

* No temporary sign shall be located within the vision triangle except as provided in s. 16.16.090 A.3. and all setbacks required herein shall apply to ground signs and be from any property line. There shall be no minimum setback for temporary signs within the Central Business District Sign District. No temporary sign may be placed within the public right-of-way, except as set forth for sidewalk signs.

** No copy area restriction shall apply if such sign is affixed to a permanent structure and does not extend beyond the perimeter of the structure.

16.16.120 Signs Exempt From Sign Permits. Except as otherwise specified herein, the following signs shall be permitted in addition to the other allowed signs and shall not require the issuance of a sign permit for their erection. Such signs shall not be exempt from any requirements stated herein or from any structural, electrical, or material specifications or permits set forth in this or other applicable codes or other requirements of this Chapter, including maintenance and repair, and general design and construction. The provisions pertaining to landscaping, spacing, and setbacks as they relate to ground signs shall not apply unless otherwise specified herein. If the following signs are to be illuminated, such signs are to be illuminated only by reflective means unless otherwise specified.

A. Public Safety or Governmental Related Signs. The following exempt signs provide some form of public safety-related function or provide information pertaining to a governmental function or interest.

1. Historic Landmark Signs. Plaques either wall mounted or ground for designated historic landmarks or historic districts as provided in City Code of Ordinances, Chapter 2.65, or under federal law. Such plaques located within a residential zoning district shall be set back at least 10 feet from all property lines.

2. Plaques. Plaques, nameplates, dates of construction, monumental citations, commemorative inscriptions, and the like which are engraved in, or attached to the exterior of a building, monument, or wall.

3. Memorial Signs. Memorial plaques, tablets, grave markers, statuary, or other remembrances of persons or events that are non-commercial in nature.

4. Directional or Instructional Signs. Signs, not exceeding 4 square feet in area, which provide direction or instruction to guide persons within a premise, providing that such signs contain no advertising of any kind. Examples of such signs include those identifying restrooms, public telephones, public walkways, service bay entrances, loading areas, affiliation with motor clubs, parcel pick-up areas, acceptance of designated credit cards, ATMs, and other similar signs providing direction or instruction to persons using a facility but not including parking lot directional and instructional signs as set forth under subsection 5. For unique situations where the copy area of 4 square feet is not sufficient to adequately direct or instruct the public, the Director may allow an increase in copy area of such signs to a maximum size of 20 square feet. Such signs may be illuminated by reflective or internal light source. Within the commercial and industrial zoning districts, such signs may also utilize direct lighting and may be a projecting sign within the sign districts identified in 16.16.090.

5. Parking Lot Directional and Instructional Signs. Parking lot directional and instructional signs may be illuminated by reflective or internal light sources. Such signs may include the name or logo of the owner or lessee which controls the parking lot. Such signs are subject to the following requirements:

a. Directional Signs. Signs designating parking lot entrances and exits shall be limited to one sign for each entrance and/or exit and not exceeding 6 square feet in area. Parking lot directional signs shall not exceed 5 feet in height for ground signs, as measured from the established grade of the parking lot or adjacent drive to which such signs are accessory.

b. Instructional Signs. Signs designating the conditions of use or identity of parking lots shall be limited to one sign for each entrance and not exceeding 18 square feet in area. Parking lot instructional signs shall not exceed 7 feet in height for ground signs, as measured from the established grade of the parking lot or adjacent drive to which such signs are accessory. The number of such signs shall be approved by the Director with appeal to the Plan Commission. In addition, instructional signs not exceeding 3 square feet in size and 5 feet in height may be displayed to designate the use or restrictions for parking spaces within a parking lot.

6. Governmental Signs. Signs duly authorized and erected by a governmental agency which serves to inform, regulate, direct, or warn the public. The type, number, area, height, location, and illumination of governmental signs may vary from the standards of this ordinance. However, any such departure from these standards shall be limited to the minimum variation necessary to achieve the objective of such sign.

7. Nameplate Signs. For single-family and two-family dwelling units, one nameplate sign per dwelling unit is permitted, not exceeding 2 square feet in area which identifies the name of the occupant(s) of the dwelling unit.

8. Address. A maximum of two signs are permitted which identify the address of a residence or building. Such signs shall not exceed 2 square feet in area.

9. Warning Signs. "No trespassing", "no dumping", "no parking", "beware of dog", and other similar signs are permitted, not exceeding 3 square feet in area and not exceeding two in number for each premise. However, under special circumstances, the Director may permit additional signs if reasonably required to protect the health, safety or welfare of the applicant.

10. Utility Signs. Signs placed by public utilities are permitted indicating the location of utility lines or facilities.

11. Bulletin Signs or Kiosk. One exterior bulletin sign or kiosk per principal building for a school, public agency, church or institution in which notices, bulletins, and announcements may be attached. The surface area of such bulletin sign or kiosk shall not exceed 24 square feet. The setback of the respective zoning district shall apply.

B. General Purpose Exempt Signs.

1. Flags. A maximum of three flags may be displayed for each principal building. Additional flags may be allowed if a conditional use permit is approved by the plan commission in accordance with Title 18. The conditional use permit shall be approved if the plan commission finds that the additional flags do not create or add to visual clutter within the area; will not interfere with or confuse motorists or pedestrians; does not conflict with or obstruct the view of signs or buildings on adjacent premises: and is consistent and compatible with the scale of the buildings on the premise. The maximum number of flags requirement shall not apply on State or National holidays; provided the flags otherwise comply with local, State, and Federal law and do not constitute a public nuisance.

Flags may be attached to a pole or mast which is affixed to the wall or roof of a principal building or to the ground. The maximum height of any pole or mast shall be 10 feet above the roof line of the building. Any flag shall maintain a minimum clearance of at least 8 from the ground. Placement of a flag pole shall comply with the setback requirements of the respective zoning district and the flag shall not extend over a property line when it is fully extended; except as provided in s. 16.16.090.

If attached to the roof, such pole or mast for such flag must be affixed to the top of the architectural element or feature of the roof line of the building such as column, pilaster, turret, balustrade, tower, cupola, finial, spire or castellated parapet.

2. Permanent Window Signs. Permanent window signs shall be permitted. The total area of such signs plus any temporary window signs shall not exceed a maximum of 40 percent of the window area to which such signs are attached. Such signs may be illuminated pursuant to the provisions of the zoning district or sign district in which such sign is located. Permanent window signs shall not be allowed within the residential and C-1A zoning districts except as provided for home occupations.

3. Interior Signs. Signs other than window signs are permitted which are fully located within the interior of any building or stadium, athletic field, or within an enclosed lobby, court, or yard which cannot be readily seen or be distinguishable from any abutting street, and signs located within the inner or outer lobby, court, or entrance of any theater which are intended solely for information relating to the interior operation of the building in which they are located. Such signs which are visible from the public right-of-way may be illuminated by reflective or internal means, and all other internal signs may be illuminated by reflective, internal, or direct means.

4. Architectural Features. Integral decorative or architectural features of buildings, including statues and sculptures.

5. Home Occupation and Family Day Care Home Signs. One non-illuminated sign is permitted not exceeding 1 square feet in area and mounted flat against the wall of the dwelling or accessory building or visible through a window for a home occupation or family day care home, as defined in Title 18.

6. Occupational Sign. One occupational sign for each major entrance of a commercial building or public institutional building is permitted for the occupants of such building. Such sign shall not to exceed 2 square feet in area per occupant up to a maximum of 12 square feet for a multiple listing. Such sign may be a wall sign or a window sign.

7. Signs on Vehicles. Signs placed on or affixed to vehicles and/or trailers where the sign is incidental to the primary use of the vehicle or trailer are permitted, subject to the provisions of s. 16.16.130 G.

8. Vending Machine Signs. Signs affixed to and designed as an integral part of vending machines, gasoline pumps, ice or milk containers, newspaper machines, or other similar machines are permitted. Such sign may be illuminated by reflective or internal means, and shall not extend from or project from such devices.

9. Temporary Signs. Temporary signs listed in s. 16.16.110 are permitted for which no sign permit is required and as regulated therein.

10. Residential Signs. Signs as set forth in s. 16.16.080 A. which are less than 6 square feet in copy area subject to the provisions set forth therein. (Repealed and Recreated 7246, 2017; Ord. 7216 §3, 2017; Ord. 7058 §5, 2013; Ord. 6809 §3, 2008; Ord. 5757 §2, 1997; Ord. 5674 §3, 1996; Ord. 4823, 1988).

16.16.130 Prohibited Signs. The following signs are prohibited except as otherwise provided within this Chapter:

A. Signs in the Public Right-of-Way. Any sign, picture, poster, or advertisement of any description erected or placed within the public right-of-way including upon any curb, sidewalk, boulevard, telephone pole, electric pole, street light pole or other pole, bridge, tree, fire hydrant, or other similar object except official public signs which have been duly authorized by a governmental agency and wall, marquee canopy, barber pole, and public service informational signs as authorized by this Chapter.

B. Painted Building Signs. Signs painted directly onto a building.

C. Nuisance Posters. Signs or posters which are visible from the public right-of-way which are tacked, posted, or otherwise affixed to trees, poles, posts, fences, and other similar structures.

D. Signs Reducing Traffic Safety. No sign or other advertising structure shall be erected at the intersection of any streets in such manner as to obstruct free and clear vision, or at any location where, by reason of the position, shape or color, it may interfere with, obstruct the view of, or be confused with any authorized traffic sign, signal or device, or which makes use of the words the words, "stop", "danger", or any other word, phrase, symbol or character in such manner as to interfere with, mislead or confuse traffic.

E. Portable Signs.

F. Rotating Lights or Beacons. Any device or sign which incorporates a light or beacon which revolves or rotates or appears to revolve or rotate. This is not intended to prohibit such devices when used in conjunction with the operation of such facilities as hospitals and airports.

G. Signs on Parked Vehicles. The parking of any vehicle or trailer on a public right-of-way, or public property, or on private property so as to be visible from a public right-of-way, which has attached thereto or located thereon, any sign or advertising device for the apparent purpose of providing advertisement of products or directing people to a business or activity located on the same premises or any other premise. This is not intended to prohibit vehicular signage on construction vehicles or trailers while in use at construction sites. In addition, it is not intended to prohibit any form of vehicular signage which is incidental to the primary use of a vehicle or trailer unless such vehicle or trailer is clearly visible from the public right-of-way and is not moved from its location for a period exceeding 5 calendar days.

H. Projected Signs. Any lighted message, lettering, picture, or similar advertising display projected on a surface but originating from another source.

I. Moving Signs. Any device or sign which moves, revolves or swings whether by a mechanical means or as a result of wind pressure.

J. Feather Banners.

16.16.140 Non-Conforming Signs. Signs in existence upon the enactment of this Chapter shall be subject to the following provisions:

A. Legal Non-Conforming Signs. Any sign lawfully existing or under construction on the effective date of this Chapter which does not conform to one or more of the provisions of this Chapter shall be considered as a legal non-conforming sign and may be continued in operation and maintained as a legal non-conforming sign except as follows:

1. Alteration of a Legal Non-Conforming Sign. If a legal non-conforming sign or sign structure including a temporary sign or sign exempt from obtaining a sign permit is altered, enlarged, moved, or modified in any way, such sign shall be altered or removed so as to conform with all the provisions of this Chapter.

Normal maintenance, the replacement of sign panels or the change of copy for an existing sign cabinet, or incidental repairs shall not be considered as an alteration or modification to a sign. Signs painted directly on a building may be partially or completely repainted, provided that the repainted sign duplicates the original exactly, and a sign permit is obtained in accordance with s. 16.16.040 prior to the repainting. Such permit shall be conditioned by a maximum time period for the sign to be repainted.

In the case where a principal building is occupied by more than one tenant and when a tenant wishes to alter, enlarge, move, modify, or change a wall, canopy, marquee, or projecting sign, only signs applying to such tenant must conform to the provisions of this Chapter. The allowable copy area and number of signs for such altered, enlarged, moved, modified, or changed signs shall be determined by the standards set forth in this Chapter applied to the lineal footage of building wall to which the sign is attached which abuts the tenant.

2. Site Plan Approval. If there is an addition or alteration to an existing building or the construction of a new building either of which would require site plan approval as provided in Title 18, all non-conforming signs existing on such premise shall be altered or removed so as to conform with the provisions of this Chapter. This provision may be modified by the Plan Commission in its review of the site plan if the cost of altering or removing such non-conforming signs exceeds 10 percent of the cost of the addition or change proposed on the site plan or if it finds that the alteration of such signs would be an unreasonable requirement or an owner, or tenant and would not be consistent which the purpose and intent sections of this Chapter or of the Site Plan Chapter in Title 18.

Ground signs erected prior to the effective date of this Chapter which are located closer than 100 feet to any ground sign shall not be considered as non-conforming to the 100 foot spacing provisions set forth in s. 16.16.070 D.1. when a site plan is required for a property.

3. Damage to Sign. If a legal non-conforming sign is structurally damaged by any means to the extent of 50 percent or more of its value at that time, such sign shall be altered or removed so as to conform with all the provisions of this Chapter. Damage to sign panels within a sign cabinet shall not be considered as structural damage.

B. Illegal Non-Conforming Signs. Any sign which was not a lawfully existing sign on the effective date of this Chapter or which can no longer be classified as a legal non-conforming sign shall be classified as an illegal non- conforming sign and shall be subject to the provisions of s. 16.16.150 A.

16.16.150 Removal Of Certain Signs. The Director may remove or cause to be removed any and all defective, unsafe, abandoned, unmaintained, or illegal non-conforming signs when the owner or agent has failed to comply with all orders issued by the City. Such removal shall be completed by the City or the City's agent, and such cost shall be billed to the owner of the premises.

A. Illegal Non-Conforming Signs. If the Director finds that any illegal non-conforming sign specified in s. 16.16.140 B. is displayed, written notice shall be given to the owners, agent, or person having the beneficial interest in the building or the premises on which such sign is located. Alteration of the sign so as to conform with the provisions of this Chapter or the removal of the sign shall be completed within 30 days after receipt of the notice from the Director. If such sign is not in conformance with this Chapter or removed after the conclusion of such 30 day period, the Director is hereby authorized to cause the sign to be removed.

B. Abandoned Signs. Any sign, whether existing on or erected after the effective date of this Chapter, which advertises a business no longer being conducted or a product no longer being offered for sale in or from the premises on which the sign is located, shall be removed within 60 days upon the cessation of such business or sale of such product by the owner, agent, or person having the beneficial interest in the building or premises on which such sign is located, except as provided in s. 16.16.100 H.

If the Director finds that any such sign advertising a business no longer being conducted or a product no longer being offered for sale in or from the premises on which the sign is located has not been removed within 60 days upon the cessation of such business or sale of such product, written notice shall be given to the owner, agent, or person having the beneficial interest in the building or the premises on which such sign is located. Removal of the sign shall be completed within 30 days after receipt of the notice from the Director. If such sign is not removed after the conclusion of such 30 day period, the Director is hereby authorized to cause the sign to be removed.

The sign structure is considered part of a sign and is subject to the provisions of this subsection.

C. Unsafe and Unmaintained Signs. If the Director finds that any sign is unmaintained, unsafe or insecure, as specified in s. 16.16.060, or is a menace to the public, he shall give written notice shall be given to the owner, agent, or person having the beneficial interest in the building or the premises on which such sign is located. Correction of the condition which caused the Director to give such notice shall be completed within 30 days after receipt of the notice. If such condition is not corrected after the conclusion of such 30 day period, the Director is hereby authorized to cause the sign to be removed. Notwithstanding the foregoing provision, the Director is authorized to cause any sign to be removed summarily and without notice, at the expense of the owner, agent, or person having the beneficial interest in the building or premises on which such sign is located, whenever he or she determines that such sign is an immediate peril to persons or property.

16.16.160 Appeal Authority. The Board of Appeals as created in Title 18 shall have the authority to review and make determinations on all appeals, applications for variance, and requests for interpretation pertaining to the provisions set forth in this Chapter. All such review, decisions, and determinations made by the Board shall be made in strict accordance with the purpose and intent of this chapter. The Board is hereby vested with the following jurisdiction and authority:

A. Appeals. The Board shall hear and decide appeals where it has been alleged there is an error in any order, requirement, decision or determination made by the Director in the enforcement or administration of this Chapter:

1. Submission of Appeal. Appeals to the Board may be made by any person aggrieved, or by any officer, department, board or bureau of the city affected by any decision of the Director. Such appeal shall be made within 30 days by filing with the Director, and with the Board a written notice specifying the grounds of the appeal. The Director shall transmit to the Board all the papers constituting the record upon which the appeal was made. Any person filing an appeal must also make payment to the City Treasurer, a fee as stated in the City of Eau Claire Fees and Licenses Schedule. Such fee shall be refunded if the Board shall reverse, vary or modify the order, requirement, decision, or determination which has been appealed.

2. Stay of Proceedings. An appeal shall stay all legal proceedings of the action appealed, unless the Director certifies to the Board that, by reason of facts in the certificate, a stay would cause imminent peril to life or property. In such cases, proceedings shall not be stayed except by a restraining order from the Board or a court of law.

3. Decision on Appeal. The concurring vote of four members of the Board shall be necessary to reverse any order, requirement, decision or determination of the Director. The final disposition of an appeal shall be in the form of a written resolution or order signed by the secretary of the Board. Such resolution or order shall state the specific facts which are the basis for the Board's determination, and shall either affirm, reverse, vary or modify the order, requirement, decision or determination appealed, in whole or part, or shall dismiss the appeal for lack of jurisdiction or prosecution.

B. Variances. The Board shall have the power to grant variances to the terms of this Chapter, when special conditions unique to a property will not allow the property owner to meet the dimensional standards pertaining only to setback or height. To be granted a variance, the property owner must show unnecessary hardship as herein defined and the Board must uphold the purpose and intent of this chapter and deliver substantial justice in its decision.

1. Submission of Application for Variance. Applications for a variance to the terms of this Chapter shall be filed by the owner, agent, or other persons having beneficial interest in the property for which the variance is being requested on forms provided by the Director. Such application shall be submitted to the Director not less than 15 working days prior to the scheduled meeting of the Board and accompanied with such application shall be a fee as stated in the City of Eau Claire Fees and Licenses Schedule payable to the City Treasurer. Upon receipt of an application, a Class I notice shall be given and property owners within 175 feet of the subject property shall be notified of the meeting by mail.

2. Review Criteria. The variance shall not conflict with the purpose or intent of this Chapter or with other policies of the city. A variance must, by standard, be the minimum necessary to grant relief and must not be detrimental to adjacent properties. "Unnecessary hardship" shall be defined as an unusual or extreme decrease in the adaptability of the property related to the provisions of this Chapter, caused by factors such as topography, elevational differences between the lot and adjacent public right-of-way, lot configuration or other factors uniquely applicable to that particular piece of property, as distinguished from all other property in the same district. Factors which are not considered as grounds for "unnecessary hardship" shall include but shall not be limited to:

a. loss of profit or pecuniary hardship;
b. self-imposed hardship;
c. variances granted to neighboring properties;
d. existing legal non-conforming signs located on neighboring properties.

3. Approval of Variance. A concurring vote of four members of the Board shall be necessary to grant a variance. The final disposition of a variance shall be in the form of a written resolution or order signed by the secretary of the Board which shall state the specific findings which are the basis for the Board's determination. In granting variances, the Board may impose special conditions to ensure that the purpose of the ordinance is met. Violations of such conditions, when made part of the terms under which the variance is granted, shall be deemed a violation of this Chapter. If a variance is granted, it shall be permanently applicable to the property if all the conditions that are attached are met and all factors that warranted the variance remain.

C. Interpretations. The Director may, where there is doubt as to the meaning thereof, present to the Board for their interpretation the words, terms, rules, regulations, provisions and restrictions of this Chapter. In exercising its power of interpretation, the Board's action shall not change or have the effect of changing any rule, regulation, provision or restriction of this Chapter, but shall only affect its application to the specific case before the Board. Interpretation by the Board shall be made without hearing and shall require a concurring vote of four members.

16.16.170 Licensing and Insurance Requirements. No person shall install, erect, or maintain any sign set forth below in the City without first obtaining a license to do so from the City.

A. Ground signs greater than 10 feet in height or greater than 50 square feet in area;
B. Wall signs exceeding 100 square feet in area;
C. Canopy, marquee, projecting, or roof signs;
D. Electrical signs which require an electrical connection other than an electrical plug;
E. All signs except awning signs which extend over the public right-of-way by more than 2 inches.

F. The fee for such license shall be as stated in the City of Eau Claire Fees and Licenses Schedule. Application for such license shall be made in writing to the City Clerk or the City Clerk's designee. Applications for licenses shall be filed with the City Clerk or the City Clerk's designee, together with the license fee and a certificate of insurance. Such license shall be issued by the city clerk upon recommendation of the administrator and shall have a term of one year from July 1 to June 30. Such license may be revoked by the city council at any time, whenever in the opinion of said city council such sign or sign hanger has violated any of the provisions of this chapter or any ordinance of the city of Eau Claire pertaining to the business of sign hanging.

G. Each sign installer shall maintain insurance for, or provide other proof to the City's satisfaction of, protection against claims under workers compensation acts; claims due to personal injury or death of any employee or any other person; claims due to injury or destruction of property; and claims arising out of errors, omissions, or negligent acts for which the applicant is legally liable. The limits for such insurance shall be as follows: comprehensive general liability for personal (bodily) injury and property damage combined (including contractual liability, products, and completed operations) - $500,000 per occurrence; auto liability for personal (bodily) injury and property damage - $500,000 per occurrence. A certificate of insurance showing the amounts and extent of such insurance shall be submitted to the city clerk prior to the issuance of a license.

16.16.180 Signs Not Regulated By Ordinance. An application for any sign or advertising display or structure for which no regulation in this Chapter is applicable shall be considered by the Plan Commission under the conditional use permit procedure as outlined in Title 18, and such application shall be approved or denied in harmony with the purpose and intent of these regulations.

16.16.190 Interpretation. In their interpretation and application, the provisions of this Chapter shall be held to be the minimum requirements necessary for the promotion of the public health, safety, and general welfare.

16.16.200 Conflicting Codes and Ordinances. If any provision or requirement of this Chapter is found to be in conflict with any other provision or requirement of this Chapter or of any other applicable governmental law, ordinance, or rule, the regulations which establishes the more restrictive rule or higher standard shall govern.

16.16.210 No Vested Right. Nothing in this Chapter shall be interpreted or construed to give rise to any permanent vested rights in the continuation of any particular sign or sign structure of any kind. The provisions of this Chapter are hereby declared to be subject to subsequent amendment, change or modification as may be necessary to the preservation or protection of public health, safety, and welfare.

16.16.220 Violations and Penalties. Any person who violates or causes to be violated any provisions of this Chapter or fails to carry out the lawful order of the Director made pursuant to this Ordinance shall upon conviction thereof, be subject to a forfeiture of not less than $10 nor more than $100, together with the costs of prosecution, and in default of payment thereof shall be committed to the Eau Claire county jail for a term not to exceed 30 days. Each day such violation continues shall constitute a separate violation. (Repealed and recreated Ord. 7246, 2017; Ord. 4823, 1988).

CHAPTER 16.18

POSTER PANEL SIGNS

Sections:

16.18.010 Purpose and Intent.
16.18.020 Administration and Enforcement.
16.18.030 Definitions.
16.18.040 Permits for Poster Panels.
16.18.045 Lease of City-Owned Property.
16.18.050 Sign Permits Not Required.
16.18.060 General Provisions.
16.18.070 Non-Conforming Signs.
16.18.080 Removal of Signs.
16.18.090 Licensing and Insurance Requirements.
16.18.100 Interpretation.
16.18.110 Conflicting Codes and Ordinances.
16.18.120 Vested Right.
16.18.130 Violations and Penalties.

16.18.010 Purpose and Intent. This code provides the legal framework to regulate poster panels within the City of Eau Claire. Since exterior signing has a clear impact on the character and quality of life in a community, the purpose and intent of this chapter with respect to poster panels shall be consistent with those objectives stated for on-premise signs in 16.16.010. This code recognizes the provision of off-premise advertising by means of poster panels in contributing to the effective display and transfer of business and community information. The opportunity to erect poster panel signs, however, shall be balanced by the need for aesthetics as reflected in the location and physical features of such signs, their compatibility with surrounding land uses and existing signs, and the safety and public welfare of the residents of the city relative to the location, construction, and maintenance of such signs. Therefore, any such sign must comply with the provisions stated herein as well as all other applicable provisions of the municipal code. (Ord. 4823, 1988).

16.18.020 Administration and Enforcement. The administration and enforcement of this Chapter shall be the responsibility of the Director of Planning and Development. (Ord. 4823, 1988).

16.18.030 Definitions. In this Chapter and Chapter 16.16, the following words shall have the meaning defined below, unless it is apparent from the context that different meanings are intended. The definitions set forth in 16.16 shall also be applicable to this Chapter.

Non-conforming Sign. A sign which does not comply with one or more of the provisions of this Chapter or Title 18.

Off-premise Sign. A sign which directs attention to a business, profession, person, activity, commodity, or service which is conducted, sold, or offered at a location other than the premises on which the sign is located.

On-premise Sign. A sign which directs attention to a business, profession, person, activity, commodity, or service located on a premise where the sign is installed and maintained.

Poster Panel. A sign erected, constructed or maintained for the purpose of displaying changeable advertising or off-premise outdoor advertising by means of posters, or pictorial, or reading matter, when such sign is supported by uprights or braces, or attached to a building. A poster panel shall not be considered as a changing sign as defined in Chapter 16.16.

Sign Height. The distance measured vertically from the average grade of the finished ground elevation to the highest point of the sign. For ground signs this shall include visual appurtenances which may extend above the sign.

Sign Area or Copy Area. The entire area within a single continuous perimeter enclosing the extreme limits of the message delineated by lettering, representations, emblems, or other figures, together with any material or color forming an integral part of the display or used to differentiate the sign from the background against which it is placed. Structural members bearing no sign copy shall not be included. (Ord. 4823, 1988).

16.18.040 Permits for Poster Panels. Poster panels may be erected, moved, enlarged, or reconstructed within the city only upon the granting of a conditional use permit by the City Plan Commission according to the provisions set forth in this Chapter and according to the procedures and requirements set forth for conditional use permits in Title 18 except as otherwise provided in this Chapter. Such conditional use permits may be approved only for poster panels to be located within the "C-3" General Commercial District, "I-1" Light Industrial District, and "I-2" General Industrial District, identified in Title 18, and within any Highway District or Planned Development District identified in Title 18 which has an underlying zoning of "C-3", "I-1", or "I-2". Poster panels shall not be permitted within the Central Business District Sign District identified in Chapter 16.16 or within the Neighborhood Conservation District as set forth in Title 18.

Upon approval of a conditional use permit for a poster panel, such sign may be erected, moved, enlarged, or reconstructed upon issuance of a sign permit subject to the provisions of this Chapter in accordance with the permit provisions set forth in 16.16.040. (Ord. 4823, 1988).

16.18.045 Lease of City-Owned Property. A. Property owned by the city of Eau Claire shall not be leased for the purpose of construction, maintenance, or display of a poster panel sign, and any such lawful and valid lease shall be terminated at the expiration of its term, except as provided herein.

B. City-owned property may be leased for said purposes if the parcel is zoned “C-3”, “I-1”, or “I-2”. Any such lease shall only be approved by the city council following the granting of a conditional use permit to the applicant/lessee pursuant to Eau Claire Municipal Code s. 16.18.040 and compliance with the terms of this chapter. (Ord. 6892, §1, 2009)

16.18.050 Sign Permits Not Required. Sign permits shall not be required under the following conditions:

A. Change of Copy. For the changing, replacing, or altering of the changeable copy on such signs.

B. Maintenance. Normal maintenance such as painting, repairing, or cleaning, an existing sign provided no structure change to the sign or sign structure is made. (Ord. 4823, 1988).

16.18.060 General Provisions. The following provisions shall be applicable to all poster panels.

A. Construction. Poster panels shall be constructed of metal only. This requirement includes the entire sign structure, except for the display area and borders which may be constructed or finished in wood. Such signs shall be designed, constructed, or erected to withstand horizontal wind pressures of not less than 30 pounds per square foot and shall be constructed in accordance with all applicable building codes.

B. Sign Types Permitted. A poster panel shall be erected only as a ground sign and shall not be located within the vision triangle.

C. Height. The maximum height for a poster panel or sign structure shall be 40 feet above the grade of the street or highway which the sign is being directed towards or up to 20 feet above the grade at the base of the structure, whichever is greater. If deemed appropriate by the Plan Commission in the granting of a conditional use permit, the Commission may allow poster panels at greater heights than set forth by this ordinance or may require lesser height.

D. Copy Area. No poster panel shall exceed 400 square feet in copy area.

E. Setback. Poster panels shall comply with the setback provisions set forth in Title 18. Setbacks shall be measured from the appropriate property line to either the poster panel or sign structure, whichever is nearest the property line.

F. Number of Signs. Each sign structure may have a maximum of two sign faces attached to it. If two sign faces are oriented in opposite (180°) directions and parallel to each other, or if the interior angle at the apex of the intersection of the two sign faces is equal to or less than 60°, each sign face may be as large as the maximum size permitted. If such angle is greater than 60°, the total area of the two sign faces combined shall not exceed the maximum area for a single sign face.

G. Spacing. Each poster panel or sign structure for a poster panel shall be spaced at least the distances set forth below:

1. State Trunk Highway Network and Other Highways. Poster panels erected along a state trunk highway network roadway, or along Hastings Way, shall be at least 1,000 feet from all poster panel signs on the same side of the highway. State trunk highway network roadways include interstate highways, United States highways, and intrastate highways, in accordance with Chapter 84 of the Wisconsin Statutes and Trans 108 of the Wisconsin Administrative Code.

2. Other Streets. Poster panels erected along any other street or highway shall be at least 500 feet from all poster panel signs on the same side of the street;

3. Opposite Sides of Streets. No two poster panel sign structures on opposite sides of the street or on intersection streets shall be closer than 250 feet.

4. Other Ground Signs. No poster panel shall be closer than 100 feet from any other ground sign unless the Plan Commission finds that:

a. The placement of the poster panel more than 100 feet from another ground sign is not reasonably practicable or that complying with the 100 foot requirement would require the placement of such sign in a location that would obstruct or block buildings, or conflict with traffic circulation, parking, or access drives.

b. The poster panel will not adversely affect or inhibit the safe and efficient movement of pedestrians and motorists.

c. The poster panel will not have a substantial adverse effect on the street setting and neighborhood character.

d. The poster panel will not obscure the ground sign which is within 100 feet in terms of height or copy area, and will not obstruct the view of such sign.

These findings shall be made by the Plan Commission in accordance with the provisions for conditional use permit in Title 18. On-premise ground signs on the opposite side of a street shall not be a consideration of this 100 foot spacing provision.

H. Illumination. A poster panel may be illuminated only by a reflected or internal light source. The source of light shall be oriented or otherwise controlled to prevent glare towards any part of an existing residence, a residential area or district, or a public street or highway. No poster panel shall be constructed as a flashing, moving or animated sign. Illuminated signs shall be constructed in accordance with all applicable electrical codes.

I. Clearance. All poster panels constructed as ground signs shall have an open space of not less than 3 feet between the lowest edge of such sign and the ground level, which must remain open. If erected at a property on which a principal building is located, such poster panel shall be placed within a landscaped area which extends at least three feet in all directions from the base of the poster panel.

J. Poster Panels Adjacent to Residences.

1. Location from Residence. All poster panels shall be located at least 100 feet from any parcel that contains a dwelling unit or from the boundary of a residential zoning district, portion of a planned development district containing or proposed to contain residences, public districts, historic districts, or conservancy districts.

2. Appearance from Residences. If the back of a poster panel is visible from an adjacent residential zoning district, such sign shall have such back painted in a neutral color compatible with the background against which it is set. If the sign faces of such a sign poster panel are extended in a V-shaped orientation, they shall not be more than 20 feet apart at their furthest points.

K. Obstructing Access. No poster panel or sign structure, or any anchor, brace, guide wire or guide rod shall be attached, fastened or anchored to any fire escape, fire ladder, chimney or stand pipe, and no such structure or any part of such structure or anchor brace, guide wire or guide rod shall be erected, put up or

maintained so as to cover or obstruct any roof, required doorway, required window or other opening of any building so as to prevent or hinder ingress or egress through such required door, doorway, window, exit or other opening, or so as to prevent or hinder the raising or placing of ladders against such building for rescue or fire suppression as necessity therefore may require.

L. Maintenance. No person constructing, erecting, owning or controlling a poster panel shall fail, refuse, or neglect to remove all weeds, rubbish, or flammable waste or material within a distance of 10 feet on each side of the base of such structure, or fail to keep the sign and its structural supports in good repair and safe condition. Failure to comply with this section may result in action by the Plan Commission to rescind the conditional use permit, with subsequent removal of the entire structure as set forth in 16.18.080.

M. Identification. Every poster panel shall have marked, in a conspicuous place thereon, the name of installer and manufacturer, and the voltage of any electrical apparatus used in connection therewith.

N. Traffic Safety. No poster panel shall be erected at the intersection of any streets in such manner as to obstruct free and clear vision, or at any location where, by reason of the position, shape or color, it may interfere with, obstruct the view of, or be confused with any authorized traffic sign, signal or device, or which makes use of the words "stop", "danger", or any other comparable word, phrase, symbol or character in such manner as to interfere with, mislead or confuse traffic.

In addition, no poster panel shall create a conflict with pedestrian or vehicular circulation on the premise it is located.

O. Scenic Overlooks. No poster panel shall be erected in a manner that would obstruct or block the view of a designated scenic overlook or scenic vista.

P. Adjacent Buildings and Signs. The sign face of a poster panel shall not obstruct or obscure the view of any signs or buildings located on an adjacent premise. (Ord. 6892 §2, 2009; Ord. 6590 §4, 2005; Ord. 4823, 1988).

16.18.070 Non-Conforming Signs. Poster panel signs in existence upon the enactment of this Chapter shall be subject to the provisions set forth below.

A. Legal Non-Conforming Signs. Any poster panel sign lawfully existing or under construction on the effective date of this Chapter which does not conform to one or more of the provisions of this Chapter shall be considered as a legal non-conforming sign and may be continued in operation and shall be subject to the provisions set forth below:

1. Alteration. A legal non-conforming poster panel sign or sign structure shall not be altered or modified in any way except as provided in this section.

Normal maintenance and the changing, replacing, or altering of the changeable copy of a poster panel sign shall not be considered as an alteration or modification to such sign.

The elimination of a sign face from the sign structure of a legal non-conforming poster panel shall be permitted.

2. Damage to Sign. If a legal non-conforming sign is damaged by any means to the extent of 50 percent or more of its assessed value at that time, such sign shall be altered or removed so as to conform with all the provisions of this Chapter.

3. Site Plan Approval. If there is an addition or change to any property that would involve site plan approval as required in Title 18, all non-conforming signs existing on such property shall be altered or removed so as to conform with the provisions of this Chapter. Such alteration as required by this provision shall not require a conditional use permit. If any lease or agreement exists which prohibits this from occurring at the time of the site improvements, the Plan Commission can require conformance with this provision at the expiration of such lease or agreement.

Poster panels erected prior to the effective date of this Chapter which are located closer than 100 feet from an on-premise ground sign shall not be considered as non-conforming to the provisions of 16.18.060 G.4.

4. Exceptions and Credits. The owner of a legal non-conforming poster panel shall be eligible to receive one poster panel face credit, herein after called a credit, for each sign face of a legal non-conforming poster panel when such sign is removed and which the owner thereof receives no compensation of any kind for such removal. To reserve such credits, written notice shall be given by the owner or owner's agent to the Director that a legal non- conforming poster panel is to be removed. Such notification shall be made prior to any alteration of the poster panel and shall be accompanied by a fee as stated in the City of Eau Claire Fees and Licenses Schedule. The Director shall maintain a log of the credits and the name of the owner thereof.

Subject to the terms and conditions set forth below, a credit may be used to reconstruct or move a legal non-conforming poster panel on the same lot where it is located, or can be used to construct a new poster panel at a different location. Poster panels erected, moved, or reconstructed by the use of a credit shall not require the approval of a conditional use permit.

a. Poster panels erected, moved, or reconstructed through the use of a credit shall comply with the provisions of 16.18.060.

b. Poster panels erected, moved, or reconstructed pursuant to this section shall be located only within a zoning district or area in which poster panels are permitted pursuant to 16.18.040. Where the plan commission has previously denied a conditional use permit for a premises as provided in s. 16.18.040, such credits shall not be used to erect, move, or reconstruct a poster panel on said premises or within a distance from such premises as determined by the plan commission at the time of taking action on such conditional use permit. Such distance shall not exceed the applicable distances set forth for poster panel spacing in 16.18.060 G. In making such determination that a poster panel or panels shall not be located within a distance of the prescribed premises by use of a credit, the commission shall consider the following factors: number, size, setback and height of existing signs and buildings in the area; pedestrian and vehicle circulation on abutting streets and within properties in the area; and policies contained in both the comprehensive plan and zoning code. The plan commission's consideration of these factors shall relate to whether such sign would have an adverse effect on the safety and welfare of the public, or aesthetics of the area.

c. One credit shall be used for each sign face that is erected, moved, or reconstructed.

d. The construction, reconstruction, or relocation of poster panels pursuant to this subsection may be initiated upon receipt of a sign permit issued by the Director in accordance with the sign permit provisions set forth in 16.16.040.

e. A credit must be used by its owner within three years of when the credit is received from the Director. Construction of a poster panel which is approved by the Director shall constitute use of a credit.

f. The owner of a credit shall not transfer a credit to another person, firm, or business except through the sale of substantially all the assets of a company located within the City or through the liquidation of a company which owns a credit.

Poster Panel Face Credit--Repealed. On November 3, 2003, the provisions for the issuance of a poster panel face credit for the removal of a non-conforming poster panel shall be repealed. Any previously issued credit that has not been used shall remain in effect until used or expired, subject to the provisions of this subsection A. 4.

B. Illegal Non-Conforming Signs. Any sign which was not a lawfully existing sign on the effective date of this Chapter or which can no longer be classified as a legal non-conforming sign shall be classified as an illegal non- conforming sign and shall be subject to the provisions of 16.18.080. (Ord. 6445, 2003; Ord. 6363 §36, 2002; Ord. 5473, 1994; Ord. 4920, 1989; Ord. 4823, 1988).

16.18.080 Removal of Signs. The Director may remove or cause to be removed any and all defective, unsafe, abandoned, unmaintained poster panel signs, or illegal non- conforming signs when the owner or agent has failed to comply with all orders issued by the City. Such removal shall be completed by the City or the City's agent, and such cost shall be billed to the owner, agent or person having beneficial interest in such premises.

A. Illegal Non-Conforming Signs. If the Director finds that any illegal non-conforming sign specified in 16.18.070 B is displayed, written notice shall be given to the owner, agent, or person having the beneficial interest in such sign or the premises on which such sign is located. Alteration of the sign so as to conform with the provisions of this Chapter or the removal of the sign shall be completed within 30 days after receipt of the notice from the Director. If such sign is not in conformance with this Chapter or removed after the conclusion of such 30 day period, the Director is hereby authorized to cause the sign to be removed.

B. Unsafe and Unmaintained Signs. If the Director finds that any sign is unmaintained or unsafe, or is a menace to the public, written notice shall be given to the owner, agent, or person having the beneficial interest in such sign or the premises on which such sign is located. Correction of the condition which caused the Director to give such notice shall be completed within 30 days after receipt of the notice. If such condition is not corrected after the conclusion of such 30 day period, the Director is hereby authorized to cause the sign to be removed. Notwithstanding the foregoing provision, the Director is authorized to cause any sign to be removed summarily and without notice, at the expense of the owner, agent, or person having the beneficial interest in such sign or premises on which such sign is located, whenever he or she determines that such sign is an immediate peril to persons or property. (Ord. 4823, 1988).

16.18.090 Licensing and insurance requirements. A. No person shall install, erect, or maintain any poster panel sign in the city without first obtaining a license to do so from the city. The fee for such license shall be as stated in the City of Eau Claire Fees and Licenses Schedule. Application for such license shall be made in writing to the city clerk. Applications for licenses shall be filed with the city clerk together with the license fee and a certificate of insurance. Such license shall be issued by the city clerk upon recommendation of the director and shall have a term of one year from July 1 to June 30. Such license may be revoked by the city council at any time, whenever in the opinion of said board such sign or sign hanger has violated any of the provisions of this chapter or any ordinances of the city of Eau Claire pertaining to the business of sign hanging.

B. Each poster panel installer shall maintain insurance for, or provide other proof to the City's satisfaction of, protection against claims under workers compensation acts; claims due to personal injury or

death of any employee or any other person; claims due to injury or destruction of property; and claims arising out of errors, omissions, or negligent acts for which the applicant is legally liable. The limits for such insurance shall be as follows: comprehensive general liability for personal (bodily) injury and property damage combined (including contractual liability, products, and completed operations) - $500,000 per occurrence; auto liability for personal (bodily) injury and property damage - $500,000 per occurrence. A certificate of insurance showing the amounts and extent of such insurance shall be submitted to the city clerk prior to the issuance of a license.

C. In addition to such liability insurance requirement, the city council may require that such erection or maintenance be first approved by the city council under the provisions of Wisconsin Statutes, section 66.0425, and that the applicant comply with the provisions of those statutes. (Ord. 6363 §36, 2002; Ord. 5138 §6, 1991; Ord. 4823, 1988).

16.18.100 Interpretation. In their interpretation and application, the provisions of this Chapter shall be held to be the minimum requirements necessary for the promotion of the public health, safety, and general welfare. (Ord. 4823, 1988).

16.18.110 Conflicting Codes and Ordinances. If any provision or requirement of this Chapter is found to be in conflict with any other provision or requirement of this Chapter or of any other applicable governmental law, ordinance, or rule, the regulations which establishes the more restrictive rule or higher standard shall govern. (Ord. 4823, 1988).

16.18.120 Vested Right. Nothing in this Chapter should be interpreted or construed to give rise to any permanent vested rights in the continuation of any particular sign or sign structure of any kind. The provisions of this Chapter are hereby declared to be subject to subsequent amendment, change or modification as may be necessary to the preservation or protection of public health, safety, and welfare. (Ord. 4823, 1988).

16.18.130 Violations and Penalties. Any person who violates or causes to be violated any provisions of this Chapter or fail to carry out the lawful order of the Director made pursuant to this Chapter shall upon conviction thereof, be subject to a forfeiture of not less than $10 nor more than $100, together with the costs of prosecution, and in default of payment thereof shall be committed to the Eau Claire county jail for a term not to exceed 30 days. Each day such violation continues shall constitute a separate violation. (Ord. 4823, 1988).

Chapter 16.24

ELECTRICAL CODE

Sections:

16.24.010 Electrical inspector--Appointment.
16.24.020 Electrical inspector--Powers and duties.
16.24.030 Chief of fire department is electrical inspector.
16.24.080 Contractor--Insurance requirements.
16.24.090 City not liable for damages.
16.24.100 Permit required.
16.24.120 Permit--Issuance.
16.24.130 Permit--Fees.
16.24.140 Minimum standards.
16.24.145 Adoption of the Wisconsin state electrical code.
16.24.150 Wiring methods and installations.
16.24.160 Grounding.
16.24.180 Abandoned wiring.
16.24.190 Underground service requirement.
16.24.200 Conduit above roof line.
16.24.220 Inspector--Findings--Action.
16.24.230 Inspector--Right of entry.
16.24.240 Inspection--Certificate.
16.24.250 Emergency work.
16.24.260 Violations--Penalties.

16.24.010 Electrical inspector--Appointment. A. The position of electrical inspector is authorized and established. The electrical inspector shall be appointed by the city manager.

B. The electrical inspector shall be a person who is skilled in the installation, planning, designing, superintending and inspection of electrical wiring and equipment. He shall be well versed in approved methods of electrical construction for safety to life and property and the laws and ordinances pertaining thereto.

C. The electrical inspector shall not be interested as a partner or otherwise with any person or persons, or in any business dealing in electrical supplies, fixtures or material, or carrying on the trade or work of an electrician.

D. In all respects the city of Eau Claire electrical inspector shall comply with the provisions of the Wisconsin Administrative Code COMM Chapters 5 and 16 (subchapter IV). (Ord. 6163 §3, 2001; Ord. 5658 §1, 1996; Ord. 5484 §9, 1995; Prior code §10.01(a), (b)).

16.24.020 Electrical inspector--Powers and duties. A. The electrical inspector may make or cause to be made a thorough inspection of any wires or equipment within the city at any time.

B. The electrical inspector shall have the power to enter any building or premises at any reasonable hour in the discharge of his duties. He shall also have the power to enter any building used in whole or in part for the purpose of public assemblage when occupied by the public, or at any time in order to examine electrical equipment in such building.

C. He shall issue licenses and permits as provided in this chapter.

D. In all respects the City of Eau Claire electrical inspector shall comply with the provisions of Wisconsin Administrative Code ILHR Chapter 17. (Prior code §10.01(c)).

16.24.030 Chief of fire department is electrical inspector. The chief of the fire department or the electrical inspector shall have the power to cause the removal of all wires, and the discontinuance of all electrical current when the circuits interfere with the work of the fire department. (Prior code §10.02).

16.24.080 Contractor--Insurance requirements. Each electrical contractor shall maintain insurance for, or provide other proof to the City's satisfaction of, protection against claims under workers compensation acts; claims due to personal injury or death of any employee or any other person; claims due to injury or destruction of property; and claims arising out of errors, omissions, or negligent acts for which the applicant is legally liable. The limits for such insurance shall be as follows: comprehensive general liability for personal (bodily) injury and property damage combined (including contractual liability, products, and completed operations) - $500,000 per occurrence; auto liability for personal (bodily) injury and property damage - $500,000 per occurrence. A certificate of insurance showing the amounts and extent of such insurance shall be submitted to the city clerk prior to the issuance of a license. (Ord. 5138 §8, 1991; Prior code §10.05(b)).

16.24.090 City not liable for damages. This chapter shall not be construed as assuming any liability on the part of the city for damages to anyone injured, or any property destroyed by defective work, material or plan in any building or the permanent equipment thereof. (Prior code §10.06).

16.24.100 Permit required. A. No electrical wiring or other equipment shall be installed or repaired without securing a permit therefor from the electrical inspector. The application for such permit shall state clearly the work planned, alterations to be made and equipment and materials to be used.

B. Permits will not be required for:

1. Installing, altering or repairing equipment or appliances that merely plug into an existing electrical receptacle;
2. Adjustment or repair of highly specialized electrical apparatus or equipment such as, but not limited to, computers, elevators, dental and medical equipment and X-ray machines, when performed by company or factory authorized personnel;
3. Only minor routine repairs and maintenance of existing facilities;
4. Electrical work in or on federal or state owned buildings or property.

C. An electrical permit shall have lapsed and be void unless the electrical work is commenced within twelve months from the date of issuance thereof. Electrical permits may be renewed at a fee as stated in the City of Eau Claire Fees and Licenses Schedule within six months from the date of lapse. A permit shall expire if work on a project is ceased for a period of twelve months or if 36 months has elapsed since permit issuance. Expired permits may be reissued at the regular permit fee. All code and ordinance requirements in effect at the time of renewal or reissuance shall apply to the project. (Ord. 7358, 2020; Ord. 6363 §36, 2002; Ord. 6241 §1, 2001; Ord. 5385 §5, 1994; Ord. 4046 §3, 1980).

16.24.120 Permit--Issuance. Such permits shall be issued only to licensed electrical contractors, or to an owner to do the work on his homestead, and such permits shall not be transferable. For the purpose of

this chapter the word "homestead" shall be construed to mean a single family dwelling occupied or to be occupied by the owner. However, permits may also be issued to plants and/or manufacturing facilities for the installation, alteration and control of electrical equipment when such establishment has in its employ a full time registered electrical engineer or Wisconsin state certified master electrician supervising an established electrical maintenance department. (Ord. 5658 §2, 1996; Ord. 5193 §2, 1991; Ord. 4418, 1983; Ord. 4181 §2, 1981; prior code §10.07(c)).

16.24.130 Permit--Fees. A permit fee, as stated in the City of Eau Claire Fees and Licenses Schedule, shall be required for new construction, additions, services, service changes, alterations, and reinspections. (Ord. 6363 §36, 2002; Ord. 6241 §2, 2001; Ord. 6163 §4, 2001; Ord. 5859 §5, 1998; Ord. 5484 §11, 1995; Ord. 5385 §6, 1994; Ord. 5138 §9, 1991; Ord. 4814, 1988; Ord. 4789 §19, 1988; Ord. 4443 §1, 1984; Ord. 4181 §3, 1981; Ord. 4085 §1, 1980; Ord. 4046 §5, 1980; Ord. 3977 §§2, 3, 1979; Ord. 3951 §18, 1979; Ord. 3141 §I, 1970; Prior code §10.07(d)).

16.24.140 Minimum standards. All electrical work, including the installation and placing of wires and other electrical equipment, shall be done in conformity with minimum standards established by the National Electrical Code, the Wisconsin State Electrical Code, and this chapter. Said codes are by this reference incorporated herein. Copies thereof shall be on file in the office of the electrical inspector and be open to public inspection. All electrical work performed in the city shall be performed in such a manner as not to endanger life or constitute a fire hazard. (Ord. 5484 §12, 1995; Ord. 5400 §2, 1994; Ord. 5193 §3, 1991; Ord. 4804, 1988; prior code §10.08).

16.24.145 Adoption of the Wisconsin state electrical code. The Wisconsin Administrative Code, chapter SPS 316 and all amendments thereto, are hereby adopted by reference and made a part hereof. The city of Eau Claire hereby takes the responsibilities of electrical inspection of public buildings and places of employment pursuant to SPS 316, subchapter IV. The city of Eau Claire shall employ a state certified commercial electrical inspector (COMEL). Except as otherwise regulated by this chapter, all installations of electrical equipment shall conform to and comply with the state electrical code, the statutes of the state of Wisconsin, and any orders, rules and regulations issued by authority thereof, and with approved electrical standards for safety to persons and property. (Ord. 7358, 2020; Ord. 6163 §5, 2001; Ord. 5658 §3, 1996; Ord. 5484 §13, 1995).

16.24.150 Wiring methods and installations. Electrical wiring methods and installations within the city shall conform to and be made and performed pursuant to the provisions of the state of Wisconsin Electrical Code. (Ord 7358; 2020; Ord. 6485, 2004; Ord. 6163 §6, 2001; Ord. 5658 §5, 1996; Ord. 4640, 1986; Ord. 4447, 1984; Ord. 4443 §2, 1984; Ord. 4100, 1980; Ord. 4085 §2, 1980; Ord. 3345 §I, 1973; Prior code §10.09(a)).

16.24.160 Grounding. Except when special permission has been obtained from the electrical inspector, all electrical services shall be grounded on the street side of the water meter. (Prior code §10.09(e)).

16.24.180 Abandoned wiring. Old wiring that has been replaced and/or abandoned shall be removed from a building structure, raceway, support, etc., or left in a manner that renders the de-energized state of the conductors obvious. (Ord. 4579 §6, 1985).

16.24.190 Underground service requirement. Permission of the city engineer must be secured before placing any underground wiring in a public right-of-way. (Ord. 7358, 2020; Ord. 5385 §7, 1994; Ord. 4443 §3, 1984; Ord. 4181 §4, 1981; Ord. 4085 §3, 1980).

16.24.200 Conduit above roof line. Where the conduit is extended above the roof line as a service drop support, a minimum size of two inch rigid steel conduit shall be used. The weather head shall not extend more than thirty inches above the roof line. (Ord. 5859 §6, 1998; Ord. 4785, 1987; Ord. 4085 §4, 1980; Ord. 4284 §2, 1982; Prior code §10.09(k)).

16.24.220 Inspector--Findings--Action. A. Whenever the electrical inspector finds wires or equipment in a dangerous condition or so placed as to interfere with the work of the fire department, he may order the persons using or operating them to place them in a safe and noninterfering condition within forty-eight hours, and on failure to comply with such order or direction, the inspector shall have authority to order such wires disconnected. Failure to comply with such orders shall constitute a violation of this chapter. Any person who resists or obstructs any lawful exercise of authority by the inspector shall be subject to the penalty provided in this chapter.

B. Persons, firms or corporations associated with crafts other than electrical and functioning in their native pursuits shall in no way alter the approved character of an electrical installation by the placement of materials or equipment in too close proximity, by concealment, by making unaccessible, or in any way affecting said approved installation so as to render it in violation of this code. (Ord. 4046 §6, 1980; prior code §10.11(a)).

16.24.230 Inspector--Right of entry. The electrical inspector shall have the power to enter any building or premises at any reasonable hour in the discharge of his duties. He shall also have the power to enter any building used in whole or in part for the purpose of public assemblage when occupied by the public, or a t any time, in order to examine electrical equipment in such building. (Prior code §10.11 (b)).

16.24.240 Inspection--Certificate. Unless otherwise especially permitted by the inspector, all work shall be left uncovered for examination until examined and approved by the inspector. Whenever any work is ready for inspection, the inspector shall be notified by the person receiving permit specifying the permit number under which work is being done. The electrical inspector shall have the privilege of inspecting all electrical installations previous to and after completion and he is empowered to have removed any obstructions, such as laths, plastering, boarding or partitions which might prevent a perfect inspection. There shall be an electrical inspection card affixed to the building permit by the electrical inspector before any electrical work can be covered or concealed. Installations when completed, found to be in accordance with the ordinances and laws relating thereto, shall be so certified by the electrical inspector who shall issue a certificate of inspection to the owner containing a general description of the installation, the street number of the premises and the date of the final inspection, which shall authorize the connection with the electrical supply. It is unlawful to make such a connection until such a certificate of inspection shall have been issued. (Prior code §10.11(c)).

16.24.250 Emergency work. Any contractor doing or causing emergency work to be done shall report the same to the electrical inspector within one day after the beginning of the work. (Prior code §10.11(d)).

16.24.260 Violations--Penalties. Any person, firm or corporation violating any provision of this chapter shall, upon conviction thereof, be punished by a fine of not less than $20.00 nor more than $500.00, together with the costs of prosecution, and every day of violation constitutes a separate offense. On default of payment of such fine, any person so convicted shall be confined in the county jail of Eau Claire County for a term not to exceed thirty days, unless the fine and costs are sooner paid. (Ord. 5385 §8, 1994; Prior code §10.13).

Chapter 16.26

OUTDOOR LIGHTING

Sections:

16.26.010 Purpose and intent.
16.26.020 General provisions.
16.26.030 Violations and penalties.

16.26.010 Purpose and intent. A. The purpose of this ordinance is to permit reasonable uses of outdoor lighting for nighttime safety, utility, security, and enjoyment while preserving the ambiance of the night; curtail and reverse any degradation of the nighttime visual environment and the night sky; minimize glare and obtrusive light by limiting outdoor lighting that is misdirected, excessive, or unnecessary; conserve energy and resources to the greatest extent possible; and help protect the natural environment from the effects of night lighting.

B. On the effective date of this ordinance, all new lighting shall conform to the provisions as stated herein and as found in the City of Eau Claire's "City Outdoor Lighting Regulations" brochure.

C. It is the intent of this ordinance that all existing outdoor lighting shall eventually conform. All outdoor lighting which is replaced must meet or exceed the requirements of this ordinance.

16.26.020 General provisions. A. Wattage per square foot maximums. All lighting installations are limited to the watts per square foot allowances for the given activity as stated in the 2006 International Energy Conservation Code and the American Society of Heating, Refrigerating, and Air Conditioning Engineers 2004

which is part of the State Energy Code. Standards may be amended from time to time.

B. Maximum pole heights. All lighting installed on poles shall not exceed 40 feet in height as measured from the grade level. Pole heights should be optimally chosen to the extent possible to provide effective lighting and not create off-site glare. Pole heights shall not exceed 25 feet in height when within or adjacent to a residential district.

C. Fixture type. All lighting installations shall be designed and installed to be fully shielded (full cut-off or recessed) mounted facing 90º to the horizontal plane, except as provided herein:

1. In residential zoned areas, or for properties adjacent to residential zoned areas, light shall be shielded such that the lamp element is not directly visible outside the perimeter of the property or from the adjacent residential property. Light glare shall be shielded from any street or public way.

D. Canopy lighting. Canopy lighting for service station pump islands or similar areas shall be fully recessed into the lower surface of the canopy and shall be fully shielded utilizing flat lenses.

E. Signage. Sign illumination is regulated by the Sign Code. All signs with reflected lighting shall be fully shielded if cast down or if cast up shielded in such a way to concentrate light only on the sign.

F. Exceptions. The following lighting is exempt from these standards:

1. Public roadway lighting, following best practices of the Illuminating Engineering Society of North America.
2. Lighting within swimming pools and other water features.
3. Exit signs and other illumination required by building codes.
4. Lighting for stairs and ramps, as required by the building code.
5. Holiday and temporary lighting (less than thirty days use in any one year).
6. Football, baseball, and other field lighting, but only with plan commission approval and recognizing that steps have been taken to minimize glare and light trespass and to utilize sensible curfews.
7. Low voltage pedestrian, landscape, and building lighting, but such lighting shall be shielded in such a way as to eliminate glare and light trespass.
8. Public monuments and national, corporate, and institutional flags.
9. Other situations as specified in adopted electrical codes.

16.26.030 Violations and penalties. A. Any person, firm or corporation violating any provision of this chapter shall, upon conviction thereof, be punished by a fine of not less than $20.00 nor more than $500.00, together with the costs of prosecution, and every day of violation constitutes a separate offense. On default of payment of such fine, any person so convicted shall be confined in the county jail of Eau Claire County for a term of not to exceed thirty days, unless the fine and costs are sooner paid. (Ord. 6893, 2009).

Chapter 16.28

HEATING, VENTILATING, AND AIR CONDITIONING (HVAC) CODE

Sections:

I. ADMINISTRATION

16.28.010 Title.
16.28.020 Purpose.
16.28.030 Scope.
16.28.040 Definitions.
16.28.050 Board of heating examiners--Created.
16.28.060 Board of heating examiners--Membership.
16.28.070 Board of heating examiners--Appointment.
16.28.080 Board of heating examiners--Term of office.
16.28.090 Board of heating examiners--Duties--Appeals.
16.28.100 Heating inspector--Created--Appointment.
16.28.110 Inspections--Qualifications--Duties.
16.28.120 Inspections--Procedures.
16.28.130 Power to deem unsafe.
16.28.140 Existing buildings--Unsafe orders.
16.28.150 Heating, ventilating, and air conditioning (HVAC) permit fees.

II. GENERAL REGULATIONS

16.28.160 State of Wisconsin codes adopted.
16.28.170 Gas pipe installations.
16.28.180 Prohibited connections.
16.28.190 Prohibited installations.
16.28.200 Enforcement.
16.28.210 Equipment testing--Required.
16.28.220 Equipment testing--Procedure.
16.28.230 Test for leaks.
16.28.240 Inspector--Right of entry.
16.28.250 Inspector--Disconnection orders.
16.28.260 Municipal liability.
16.28.270 Codes on file.
16.28.275 Standards for outdoor waterstoves.
16.28.280 Violations--Penalties.

I. ADMINISTRATION

16.28.010 Title. These regulations and standards shall be known as the "Heating, Ventilating, and Air Conditioning (HVAC) Code of the City of Eau Claire", hereinafter referred to as "this code." (Ord. 6165 §1, 2001; Ord. 5393, 1994).

16.28.020 Purpose. The purpose of this code is to protect the health, safety and welfare of the public and employees by establishing minimum standards for the safe and stable design, installation, quality of materials, and maintenance of air conditioning and ventilating equipment and all accessories thereto installed or existing in all buildings and structures existing or built in the City of Eau Claire. (Ord. 5393, 1994).

16.28.030 Scope. This code shall include and apply to the installation, alterations, maintenance, conversion, replacement and inspection of all air conditioning and ventilating equipment, including cooling coils, solid fuel burning equipment, oil heating units, gas burners or gas equipment, or other forms of heating, ventilating, and air conditioning equipment and new mechanical work (i.e., ductwork, hydronic piping, etc.) or additions and alterations to existing systems. The provisions of this code or one of the adopted codes having jurisdiction shall apply to the above installations. (Ord. 6165 §2, 2001; Ord. 5393, 1994).

16.28.040 Definitions. Definitions contained in COMM Chapters 20 and 51 are hereby adopted by reference, along with the following definitions:

A. "Board" means the board of heating examiners and appeals.

B. "Building official" means the officer charged with the administration and enforcement of this code, or a duly authorized representative.

C. "Gas" means all forms of gaseous petroleum products, including natural gas, propane, and butane, whether or not mixed with air.

D. "Liquid" means a substance that, unlike a solid, flows readily, but, unlike a gas, does not expand indefinitely.

E. "Solid" means a substance neither liquid nor gas but having length, breadth, and thickness.

F. "Inspector" means the heating inspector of the city or designee.

G. "Hazardous occupancy" shall be those coming under the scope of COMM Chapter 59, Wisconsin Administrative Code.

H. "HVAC" shall mean heating, ventilating, and air conditioning;

I. “Outdoor waterstove” means any individual hand-fed furnace designed to burn wood and used for the purpose of heating water where the furnace is located outside the structure into which the hot water produced thereby is piped. (Ord. 6483 §2, 2004; Ord. 6165 §4, 2001; Ord. 5393, 1994).

16.28.050 Board of heating examiners--Created. There is created a board of heating examiners and appeals, whose duties are hereinafter enumerated. (Ord. 5393, 1994).

16.28.060 Board of heating examiners--Membership. A. Such board shall consist of seven members, five with voting rights and two in an advisory capacity. The five members with voting rights shall be the following: Two shall be licensed warm air heat heating contractors; two shall be licensed wet heat heating contractors; and the city fire chief. Should the occasion arise when there are not two licensed wet heat heating contractors available for service on the board, then in such event one or, if need be, two other persons otherwise reasonably qualified shall be appointed.

B. The two advisory members shall be the city heating inspector, who shall be an ex officio member, and a representative of the local gas utility nominated by the utility and approved by the city council. The heating inspector shall serve as secretary to the board. (Ord. 5393, 1994).

16.28.070 Board of heating examiners--Appointment. The four appointed members of the board shall be appointed by the city manager, approved by the city council. (Ord. 5393, 1994).

16.28.080 Board of heating examiners--Term of office. Initially, two of the appointive members of the board shall be appointed for a term of one year, and two shall be for a term of two years. Terms shall expire on the last day of June. Incumbents shall, however, hold over until their successors have been duly appointed and qualified. (Ord. 5393, 1994).

16.28.090 Board of heating examiners--Duties--Appeals. A. Examinations for licenses. The board shall examine and pass on all applications for licenses.

B. General duties. The board shall make such rules and prescribe such procedure as may be necessary for its operation in conformity with this chapter. A majority of the board shall constitute a quorum. Hearings or meetings of the board shall be held at a place in the city hall to be designated at the appropriate time by the inspector. Decisions of the board shall be concurred in by at least three members thereof. The board shall have authority to suspend or revoke any heating contractor's license granted under this chapter for violations as hereinafter stated and after due hearing as hereinafter specified, subject to review or appeal to the city council.

C. Appeals. The board shall also act as a heating appeals board. Any person directly interested, who is aggrieved by any decision of the heating inspector or by any requirement resulting from any enforcement of this chapter, may appeal from such decision to the board. The appeal shall be made by the person aggrieved upon service of a written notice of such appeal to the inspector, within forty-eight hours after the decision appealed from is made. Said appeals board shall meet within ten days after the service of such notice, and shall render its decision within five days thereafter. The aggrieved party may present his own case to the board, or may have the assistance of legal counsel. Appeal from determinations of the board made under this section shall be made to the administrative review board under the procedures specified in ch. 1.06. (Ord. 6572 §17, 2005; Ord. 5393, 1994).

16.28.100 Heating inspector--Created--Appointment. The office of heating inspector for the city is created. The inspector shall be appointed by the city manager. Upon request, when deemed to be necessary, the inspector may obtain the assistance of any of the other city inspectors. (Ord. 5393, 1994).

16.28.110 Heating inspector--Qualifications--Duties. A. The heating inspector shall have the necessary ability to supervise the installation, alteration, maintenance or replacement of all air conditioning and ventilation equipment in the city of Eau Claire.

B. The heating inspector shall be included within the surety bond covering city employees which is approved by the city council and which is conditioned upon the faithful performance of the duties of such employees.

C. The heating inspector shall have the general management and control of all matters pertaining to his or her office, subject to supervision and final approval of the administrator of inspection services, and shall enforce all state laws and city ordinances and lawful orders relating to the installation or alteration of all air conditioning and ventilation equipment.

D. The heating inspector shall have full power to pass upon any questions arising under the provisions of this chapter relating to heating, air conditioning, or ventilation installations or equipment, subject to conditions contained in this chapter. In case of dispute of anything pertaining to this code, the heating inspector shall first ask for the assistance of the administrator of inspection services. If the matter cannot be resolved, the inspection office shall have the privilege to ask for the assistance of a professional mechanical engineer.

E. The inspector shall examine, and approve when correct, all plans and specifications for the performance of any work governed by this chapter; point out in what respect such plans or specifications are deficient or in violation thereof; inspect work in the area for which permit is required, and see that all such work is performed in accordance with the provisions thereof; stop any work being done in violation thereof, and post "stop work" signs in such cases; order any such work removed or corrected to conform with this chapter; issue certificates of approval on satisfactory completion of projects; provided, however, that no "stop work" order so posted shall affect work not governed by this chapter except where the progress of any such work would interfere with inspection of work governed by this chapter. The inspector shall, by permission of the owner or occupant, or by due process of law consistent with the provisions of Wisconsin Statutes, s. 66.0119, enter during reasonable hours any building or premises to make an inspection of air conditioning equipment and to require the production of a heating permit where he has reasonable cause to believe work is being done or

has been performed in violation of this chapter. No person shall refuse to permit such entry in the case of an emergency, or in any other case after a valid special inspection warrant has been duly issued therefor under Wisconsin Statute ss. 66.122 and 66.123, nor shall any person interfere with said inspector in the performance of his or her duties. (Ord. 6165 §5, 2001; Ord. 5393, 1994).

16.28.120 Inspections--Procedure. In any new or existing building or addition, immediately upon completion of those portions of the installation which are thereafter to be concealed or covered, the heating contractor or homeowner shall notify the inspector, giving the location of the work, said portions of the installations ready for inspection, and it shall be unlawful for any person, firm or corporation to apply wall or ceiling coverings or cover up any heating work, including piping, outlet boxes or other parts of the mechanical equipment or system, before such work has been inspected and due notice has been given that the work has been approved. The inspector shall have the right and authority to order the removal of all such coverings which may have been placed over such work before same has been inspected. The inspector shall make such inspection within two working days after notice, excepting Sundays and holidays. Final inspection on new installations shall be made upon completion of such work. Inspection of replacement or conversion work shall be made upon completion of such work. Upon inspection or reinspection of a mechanical system, any defects or code violations which require repair to assure safe operation shall be rectified before the system is placed in use. (Ord. 6483 §2, 2004; Ord. 5393, 1994).

16.28.130 Power to deem unsafe. A system or any part thereof that is found to be unsafe to life or property, shall be deemed unsafe and shall not be restored to use until such system has been made safe and approved. (Ord. 5393, 1994).

16.28.140 Existing buildings--Unsafe orders. All existing mechanical equipment and systems shall be maintained and operated in accordance with the requirements of this code. Any such equipment which does not comply with the requirements, and the operation of which is deemed unsafe to the building occupants, shall be altered as ordered by the heating inspector to secure adequate safety. (Ord. 5393, 1994).

16.28.150 Heating, ventilating, and air conditioning (HVAC) permit fees. A. No installation, conversion, alteration, or replacement of air conditioning and ventilating equipment, including cooling units, solid fuel burning equipment, oil heating units, gas burners or gas equipment, other forms of heating and ventilation equipment and new mechanical work, (i.e., ductwork, hydronic piping, etc.) or additions and alterations to existing or the installation of miscellaneous gas and oil equipment or gas piping, shall be made or commenced without first obtaining a permit therefor from the inspector.

B. Application for an HVAC permit shall be made in writing upon a blank form furnished by the heating inspector stating the name and address of the owner of the building, the owner of the land upon which it is to be erected, the name and address of the architect or designer, shall describe the location of the building and purpose for which it is to be used, and shall contain such other information as the heating inspector may require. The inspector may also require submittal of a complete set of plans and specifications covering the proposed mechanical system or improvements.

C. The fees for mechanical permits shall be as stated in the City of Eau Claire Fees and Licenses Schedule.

D. The fees imposed under subsection B. of this section shall be doubled if work hereunder is commenced prior to the issuance of a permit.

E. A mechanical permit shall have lapsed and be void unless work authorized by such permit is commenced within six months from the date of issuance thereof. Permits may be renewed at a fee as stated in the City of Eau Claire Fees and Licenses Schedule within six months from the date of lapse. A permit shall expire if work on a project is ceased for a period of twelve months or if thirty-six months has elapsed since permit issuance. Expired permits may be reissued at the regular permit fee. All code and ordinance requirements in effect at the time of renewal or reissuance shall apply to the project. (Ord. 6363 §36, 2002; Ord. 6242 §1, 2001; Ord. 6165 §6, 2001; Ord. 5393, 1994).

II. GENERAL REGULATIONS

16.28.160 State of Wisconsin codes adopted. The below listed codes are adopted by reference, the content thereof to be administered and enforced in conjunction with this code by the inspection services division, department of community development.

A. Minimum standards -- One- and two-family dwellings and accessory buildings. All heating, ventilating and air conditioning equipment and systems shall be installed and maintained so as to be in conformity with the minimum standards established by COMM Chapters 22 and 23 of the Wisconsin Administrative Code.

B. Minimum standards -- Multi-family dwellings, public buildings and places of employment, and accessory buildings thereto, governed by the provisions of COMM chapters 61-65 and 66 of the Wisconsin Administrative Code. All heating, ventilating and air conditioning equipment and systems shall be installed and maintained so as to be in conformity with the minimum standards established by COMM Chapters 63 and 64 of the Wisconsin Administrative Code.

C. The following requirements shall apply to all buildings in the City and shall take precedence over the above adopted codes. (Ord. 6483 §2, 2004; Ord. 6165 §7, 2001; Ord. 5393, 1994).

16.28.170 Gas pipe installations. Gas piping shall conform to the standards set forth in the most recent edition of the "National Fuel Gas Code", designated as both ANSI Z223.1 and NFPA 54, as adopted by COMM Sections 23.16(3) and 64.23(5), Wisconsin Administrative Code. In addition to such standards, all gas piping shall meet all of the following minimum standards:

A. All exposed gas piping shall be labeled with a label clearly showing its use every 6 feet, and on each side of a wall or floor assembly;

B. Copper tubing shall not be used in a hazardous occupancy;

C. Gas piping shall only be installed by licensed contractors and their employees, or, within a single-family residence, such piping may be installed by the owner occupying or intending to occupy the residence; and

D. All gas piping three inch (3") size and larger shall be welded. All gas piping two inch (2") size and larger carrying gas at pressures of more than 3 PSI shall be welded. (Ord. 6165 §8, 2001; Ord. 5393, 1994).

16.28.180 Prohibited connections. It is unlawful for any person, firm or corporation, excepting an authorized representative of the gas supplier, to connect gas service to any premises where and when gas service (gas flow) is not at the time being rendered. Note: This provision applies to the premises and not to the connection and reconnection of particular equipment and appliances on the premises. In the latter cases regulation is provided for the heating code. (Ord. 5393, 1994).

16.28.190 Prohibited installations. It is unlawful for any person, firm or corporation to install any gas equipment or appliance for heating purposes without first determining from the gas supplier that gas is available in quantities that will assure reasonably safe and uninterrupted operation. (Ord. 5393, 1994).

16.28.200 Enforcement. The inspector is authorized to order disconnection by a licensed contractor of any gas equipment, appliance, accessory or gas piping which does not conform to the requirements of this chapter or which may be found defective and/or in such condition as to endanger life or property. Where such disconnection has been made, a notice shall be attached to such equipment, appliance, accessory or gas piping which shall state that it has been disconnected and the reason therefor, and such notice shall not be removed nor shall the equipment, appliance, accessory or gas piping be reconnected until it has been made to conform with the requirements of this chapter, and its reconnection has been authorized by the inspector. (Ord. 5393, 1994).

16.28.210 Equipment testing--Required. It is unlawful for any person, firm or corporation to place into operation any gas equipment installed or replaced until the installation has been tested as hereinafter prescribed. (Ord. 5393, 1994).

16.28.220 Equipment testing--Procedure. A. Upon completion of an installation or replacement, the heating contractor under whose license the work was performed, or the agent or employee of such contractor, or the home owner performing such work, shall notify the inspector that the installation is ready for inspection. The installation shall then be tested for leaks in accordance with s. 16.28.230. The inspector may require that a qualified representative of the city building inspections services division be present at the time of the test.

B. Following the testing, the installation shall be certified as satisfactory by the installer upon forms furnished by the gas supplier. Such forms shall be made in quadruplicate. One copy shall be given to the following: the gas supplier, the inspection services division, the customer, and the contractor.

C. The gas supply may then be turned on either by the authorized personnel of the utility supplying the gas or the licensed heating contractor under whose license the work was performed (or the employees of such contractor) if authorized to do so by the utility. (Ord. 6165 §9, 2001; Ord. 5393, 1994).

16.28.230 Test for leaks. A. The test for leaks in residences shall consist of a pressure test of not less than twenty pounds air pressure per square inch sustained for not less than ten minutes during and at the end of which time no drop in pressure shall have been detected.

B. In commercial and industrial uses, the testing pressure shall be a minimum of 20 PSI for ten minutes but not less than one and one-half times the maximum operating pressure of the gas supply lines. (Ord. 7052, 2013; Ord. 5393, 1994).

16.28.240 Inspector--Right of entry. The inspector is authorized and directed to cause inspections to be made of all consumer gas installations. Upon presentation of proper credentials, the inspector may enter any consumer's building or premises at any reasonable time for the purpose of making inspection or preventing violations of this chapter. (Ord. 5393, 1994).

16.28.250 Inspector--Disconnection orders. The heating inspector is granted the authority to order the disconnection of any gas appliance, accessory or gas piping which does not conform to the requirements of this chapter or which may be found to be defective or in such condition as to endanger life or property. Where such disconnection has been made, a notice shall be attached to such appliance, accessory or gas piping which shall state that disconnection has been effected and the reasons therefor, and such notice shall not be removed nor shall the appliance, accessory or gas piping be reconnected until all provisions of this chapter have been complied with and its reconnection authorized by the heating inspector. (Ord. 5393, 1994).

16.28.260 Municipal liability. This chapter shall not be construed to relieve from or lessen the responsibility or liability of any person supplying gas to, or selling, renting, leasing, owning, using, operating, controlling, installing, altering, repairing, removing, replacing, disturbing, connecting, disconnecting, or maintaining any gas equipment, for damages to persons or property caused by any defect therein or therefrom; nor shall the city be held as assuming any such responsibility or liability by reason of the issuance or revocation of any license, permit or certificate, or the inspection or reinspection authorized by this chapter, or by reason of the approval or disapproval of any gas equipment, sales, rentals, drawings, plans, specifications, materials, samples, test reports, literature, information or schedules authorized in this chapter. Nor shall the city be held liable for any damages resulting from the enforcement of this chapter. (Ord. 5393, 1994).

16.28.270 Codes on file. Copies of:

A. American Standards Association Manual entitled, "National Fuel Gas Code";

B. American Standards Association Manual entitled, "Requirements for Installation of Gas Equipment in Large Boilers," 1950 edition;

C. National Warm Air Heating Code for 1959, Fifth Edition;

D. American Standards Association Manual entitled, "Installation of Domestic Gas Conversion Burners," 1958 edition, and

E. "Code for the Installation of Heat Producing Appliances, Heating, Ventilating, Air Conditioning, Blower and Exhaust Systems - December, 1976," recommended by The American Insurance Association, referred to in this chapter, are on file in the office of the heating inspector, are incorporated herein by reference, and are open to the public for inspection and examination. (Ord. 6165 §10, 2001; Ord. 5393, 1994).

16.28.275 Standards for outdoor waterstoves. A. Design. 1. The outdoor waterstove shall be constructed with self-contained weather-proofing with no additional structure enclosing the fired unit.

2. The outdoor waterstove shall be listed by a nationally recognized testing laboratory acceptable to the Department of Commerce.

3. The outdoor waterstove shall be designed for operation at atmospheric pressure and be properly vented to prevent a positive pressure condition.

B. Code compliance. The outdoor waterstove and all parts accessory to it, including, but not limited to pressure safety controls, shall be installed to meet all applicable mechanical codes and the manufacturer's listing. All electrical wiring serving an outdoor waterstove shall be installed in accordance with Wisconsin Electrical Code.

C. Permit. A heating permit is required prior to installation per s. 16.28.150. A site plan indicating the outdoor waterstove's location on the property and information to determine compliance with applicable standards and codes shall be filed with the permit application. Plans and calculations showing structural adequacy, as required in subsection D. 2., shall be filed with the permit application, unless waived by the heating inspector. The installation shall be inspected by the heating inspector for compliance with all applicable standards and approved plans before it is placed in operation.

D. Requirements. 1. The outdoor waterstove shall have an attached permanent stack extending at least 3 feet higher than the highest portion of the roofline of any building regularly occupied by people and having any door, openable window, or air intake vent located closer than 50 feet from the outdoor waterstove. Regularly occupied by people shall mean used in whole or in part as a place of assemblage, lodging, trade, occupancy, or use by persons.

2. All stacks and chimneys shall be designed, constructed, and maintained to withstand horizontal wind pressures of not less than 30 pounds per square foot and also in accordance with the manufacturer's listing.

3. The outdoor waterstove shall be located at least 100 feet from any property line adjoining any developable lot and 150 feet from any door, openable window, or air intake vent of a building regularly occupied by people other than the building(s) served by the outdoor waterstove.

4. The outdoor waterstove shall not be located in any front yard or corner side yard.

5. The outdoor waterstove shall be enclosed by fencing or other barrier to prevent access by unauthorized persons.

E. Public nuisance. Dense smoke, noxious fumes, gas and soot, cinders, or live sparks produced by an outdoor waterstove that interfere substantially with the comfortable enjoyment of life, health, or safety of another person or the public may be declared a public nuisance by a properly designated authority and ordered abated.

F. Disconnection or removal. If an outdoor waterstove or any part thereof is deemed unsafe under s.16.28.130 or is in violation of this chapter, the heating inspector may order that the outdoor waterstove be permanently disconnected or removed.

G. Repairs. Repairs to the outdoor waterstove shall be made in accordance with the manufacturer's recommendations. (Ord. 6483 §2, 2004).

16.28.280 Violations--Penalties. Any person, firm or corporation violating any provision of this chapter shall, upon conviction thereof, be punished by a forfeiture of not less than $20.00 nor more than $500.00, together with the costs of prosecution, and every day of violation shall constitute a separate offense. On default of payment of such forfeiture, any person so convicted shall be confined in the county jail of Eau Claire County for a term not to exceed thirty days, unless the forfeiture and costs are sooner paid. (Ord. 5393, 1994).

Chapter 16.32

FIRE PREVENTION CODE

Sections:

16.32.010 State fire prevention code adopted.
16.32.015 Burning conditions.
16.32.017 Fire Performances.
16.32.020 Bureau of fire prevention.
16.32.030 Definitions.
16.32.035 Frequency of inspections.
16.32.040 Temporary inspectors.
16.32.050 Smoke detectors.
16.32.055 Storage tanks.
16.32.060 Violations--Penalty.

16.32.010 State fire prevention code adopted. A. The provisions of the Wisconsin Administrative Code of the Department of Safety and Professional Services, Chapter SPS 314, are adopted by reference, and the rules and regulations contained therein are made a part of this chapter as if they were fully set forth herein. Any act required to be performed or prohibited by the Administrative Code provisions incorporated herein by reference is required or prohibited by this chapter. A current copy of the Wisconsin Administrative Code containing the sections herein enumerated and all amendments thereto shall be kept on file in the office of the fire department administration. Any amendments to this chapter shall be adopted by reference as if they were fully set forth herein.

B. If any provisions, herein adopted by reference, are in conflict with or contravene each other, or are in conflict with or inconsistent with any provision of this chapter, the strictest provision shall be applied. (Ord. 7131 §1, 2015; Ord. 5904, 1998; Ord. 4989, 1989; Ord. 4947, 1989; Ord. 4268 §1, 1982).

16.32.015 Burning permits. A. It shall be unlawful for any person, firm or corporation to kindle or maintain an outdoor fire without first obtaining a permit from the fire department. Such permit shall be subject to the rules and conditions adopted by the department governing outside burning.

B. The following outside burning shall be allowed without a permit, but shall be subject to restriction by the department at any time:

1. Outdoor cooking.

2. Training for fire departments.

3. Campfires, to include an outdoor open fire that is kindled and maintained within a noncombustible receptacle made and designed for such purpose if the fire is contained entirely within the receptacle and does not pose a threat to health, safety and welfare. Under no circumstances will such receptacle be used to burn plastics, trash, garbage or other products that might produce noxious fumes. (Ord. 6020, 2000; Ord. 5104, 1990; Ord. 4619 §1, 1986).

16.32.017 Fire Performances. A. It shall be unlawful for any person, group, or organization to practice, perform or otherwise engage in a fire performance without first obtaining a permit from the fire department. Such a permit shall be subject to the rules and conditions adopted by the fire department governing fire performance.

B. For purposes of this section, “fire performance” shall include, but not be limited to, fire breathing, fire juggling, fire spinning, fire dancing and any other artistic display or performance involving an open flame. (Ord. 7042, 2013)

16.32.020 Bureau of fire prevention. A bureau of fire prevention in the fire department is established which shall be operated under the supervision of the chief of the fire department. (Ord. 4099 §2, 1980).

16.32.030 Definitions. A. "The chief of the bureau of fire prevention" shall be construed to mean chief of the fire department.

B. "Chief of the fire department" shall be construed to mean and include any officer, member or inspector of the fire department who shall have been deputized, delegated, appointed or ordered by the chief of the fire department to act for him. (Prior code §3.22(c), (d)).

16.32.035 Frequency of inspections. Pursuant to Wisconsin Administrative Code Chapter SPS 314.01(13)(b)(6), the chief of the fire department is authorized to reduce the frequency of fire inspections required under Wisconsin Administrative Code Chapter SPS 314.01(13)(b)(5) to at least once per calendar year, provided the interval between those inspections does not exceed 15 months. (Ord. 7131 §2, 2015; Ord. 6839, 2008).

16.32.040 Temporary inspectors. The chief of the fire department may detail such other member of the fire department and any other inspectors in the employment of the city as inspectors as shall from time to time be necessary. (Prior code §3.22(e)).

16.32.050 Smoke detectors. A. Scope. The requirements of this chapter shall apply to all new and existing apartment buildings, roominghouses, hotels, motels, dormitories, convents, monasteries, children's homes, homes for the aged and infirm, row houses, convalescent homes, jails, dwellings containing three or more rental units, and other places of abode or detention.

B. Definitions. As used in this section:

1. "Place of abode" means a building or part of a building, such as an apartment building, roominghouse, hotel, dormitory or convent:

a. Occupied as a residence by three or more families living independently or occupied by two such families and used also for business purposes; or

b. Occupied for sleeping or lodging purposes by three or more persons not members of the same family.

2. "Place of detention" means a building or part of a building used as a place of abode wherein persons are forcibly confined.

3. "Sleeping area" means the area of the unit in which the bedrooms or sleeping rooms are located. Bedrooms or sleeping rooms separated by another use area such as a kitchen or living room are separate sleeping areas, but bedrooms or sleeping rooms separated by a bathroom are not separate sleeping areas. Each individual room or suite of rooms in hotels or motels is considered a separate area.

4. "Smoke detector" means a device which detects particles or products of combustion other than heat, and as more specifically defined in Wisconsin Administrative Code Chapter SPS 321.09(2). Smoke detectors required by this section shall be continuously powered by the house electrical service or by a supervised detection system. Common or public area detectors shall be interconnected so that activation of one detector will cause activation of all detectors or other audible devices.

5. "Unit" means a building or that part of a building which is intended to be used as a home, residence or sleeping place by one person or by two or more persons maintaining a common household to the exclusion of all others.

C. Approval. A smoke detector required under this section shall be listed by Underwriters Laboratory or a nationally recognized testing agency.

D. Installation and Maintenance.

1. All smoke detectors required under this section shall be installed according to the directions and specifications of the manufacturer.

2. The owner shall be responsible for maintaining the smoke detectors and the smoke detection system in good working order.

3. Tenants shall be responsible for informing the owner, in writing, of any smoke detector malfunction. In addition to notifying the owner in writing, at the option of the tenant, communication may also be made via other commonly used forms of communication, such as telephone or email.

4. The owner shall have five days upon receipt of written notice from the tenant to repair or replace the smoke detector.

5. Tenants shall acknowledge to the landlord that detectors in the rental property are in working order at the time of taking occupancy and annually thereafter.

6. No tenant or other person shall disconnect, disable or otherwise render inoperative a functioning smoke detector installed pursuant to the provisions of this section.

7. The owner shall furnish to the tenant written notice of the responsibilities of the tenant and the obligations of the owner regarding smoke detector maintenance.

E. Requirement.

1. Provisions [F] 907.2.11.1 and [F] 907.2.11.2 of the International Building Code shall be adopted and are incorporated herein by reference as if fully set forth herein, including all existing and future amendments made thereto.

2. For all buildings within the scope of this section, owners shall install and maintain smoke detectors in accordance with the requirements of [F] 907.2.11.1 and [F] 907.2.11.2 of the International Building Code. (Ord. 7131 §3, 2015; Ord. 5143, 1991; Ord. 4268 §1, 1982; Ord. 4099 §3, 1980).

16.32.055 Storage tanks. A. Any person, firm or corporation removing any locally regulated storage tank governed by Wisconsin Administrative Code ILHR 10 shall first secure a permit from the Eau Claire fire department. The fee for such permit shall be as stated in the City of Eau Claire Fees and Licenses Schedule.

B. Any person, firm or corporation upgrading any storage tank governed by Wisconsin Administrative Code ILHR 10 shall first secure a permit from the Eau Claire fire department. The fee for such permit shall be as stated in the City of Eau Claire Fees and Licenses Schedule. (Ord. 6363 §36, 2002; Ord, 5334 §2, 1993; Ord. 5227, 1992; Ord. 5204, 1992).

16.32.060 Violations--Penalty. Any person who violates any of the provisions of sections 16.32.010 through 16.32.055 shall upon conviction pay a forfeiture of not less than 20 dollars nor more than 500 dollars, for each offense plus the costs of prosecution. Each day that a violation continues shall constitute a separate offense. (Ord. 5334 §3, 1993; Ord. 5155, 1991; Ord. 4628 §1, 1986; Ord. 4619 §2, 1986; Prior code §3.23).

Chapter 16.36

STANDARDS FOR PUBLIC AND PRIVATE DEVELOPMENT

Sections:

16.36.040 Erosion Control, Stormwater management and discharge.
16.36.050 Erosion and Sediment Control.
16.36.080 Parking lot and driveway surfaces.
16.36.100 Penalty.
16.36.120 Drive apron width--nonresidential use.

16.36.040 Erosion Control, Stormwater management and discharge. A. Erosion control best management practices shall be employed on all construction sites and areas of land disturbing activities pursuant to Chapter 19.20.

B. Stormwater management for public and private development shall be done in conformance with Chapters 19.20 and 19.30 of the Code of Ordinances of the City of Eau Claire.

1. All stormwater discharged to the City storm sewer system shall meet the standards of Chapter 19.40 and any future pretreatment standards applicable by stormwater Management Plan or development agreement.

C. Direct connection to the City stormwater system is prohibited without the prior written approval of the Director of Engineering and approval of a development agreement or other agreement to allocate cost and responsibilities of acceptance of such discharge. (Ord. 7239, §1 2017; Ord. 4456 §4, 1984; Ord. 4353, 1983).

16.36.050 Erosion and Sediment Control. Erosion and sediment control for public and private development shall be done in accordance with Chapter 19.30 of the Code of Ordinances of the City of Eau Claire. (Ord. 7239, §1 2017)

16.36.080 Parking lot and driveway surfaces.* A. Definitions: In this section, unless the context clearly requires otherwise:

1. "Drive apron" means the connection between a driveway and the traveled portion of the street, in the public right-of-way, including any sidewalk area abutting thereon.

2. "Driveway" means a surface maintained for motor vehicle access and parking, including those located from street entrance to garage or parking area, and those used specifically for circular turnaround or circular through traffic.

3. "Improved surface" means a surface of bituminous paving over a base course, Portland cement concrete, brick or block designed for this use and laid over a sand base, an oiled base course, or crushed rock, which provides a stable, hard driving surface which resists rutting, is impervious to erosion, does not result in blowing dirt or dust and the ponding of water, and which eliminates the accumulation of dust, dirt and mud.

4. "Parking area" means a surface which is not a driveway or drive apron, connected to a driveway, upon which motor vehicles are parked.

B. The parking of any motor vehicle on any lot shall be on a driveway or parking area having an improved surface. The term "motor vehicle" means a vehicle which is self-propelled, except a snowmobile.

C. All driveways and parking areas shall be provided with an improved surface, which shall be constructed and maintained in accordance with the provisions of this chapter. All drive aprons shall be surfaced with concrete when the adjacent street is or has been improved with curb and gutter. These requirements shall be in effect from and after November 1, 1984 and shall apply to all existing or future driveways, parking areas and drive aprons; provided that driveways serving 1- and 2-family dwellings shall comply with such improved surface requirement on and after November 1, 1985 and parking areas larger than 15,000 square feet shall comply with such improved surface requirement on and after November 1, 1987.

D. A parking surface permit shall be obtained prior to construction of any driveway or parking area having 1500 square feet or more. For multi-family residential projects, a parking surface permit shall be obtained for any project which covers more than 10% of the lot area or 1500 square feet, whichever is less. Application for such permit shall be made to the department of community development on forms provided by the department, accompanied by plans of the proposed driveway and/or parking area surface and payment of the fee provided under Section 16.04.090 A; provided, that no plans shall be required for a driveway or parking area serving only a one- or two-family dwelling. Such plans shall show appropriate grades, location of driveways, topography, manner of controlling storm water drainage, materials to be used and method of surfacing, landscaping and screening, parking stall striping, and pattern of pedestrian and vehicular circulation. If the division finds that the parking surface will have an improved surface and will comply with all ordinances of the city, the administrator of the division shall issue a permit for construction.

E. No parking surface permit shall be required under subsection D. if the driveway or parking area has been approved in a site plan under section 18.30.

F. The provisions of subsection C. may be waived by the Plan Commission upon a finding that: An unimproved surface and the resultant rutting, erosion, blowing dirt or dust, or ponding of water, do not and will not result in a public nuisance or pose a potential danger to adjacent properties or the public right-of-way. (Ord. 6685 § 1, 2006; Ord. 4647 §2, 1986; Ord. 4456 §5, 1984).

* See Section 18.25.080 for standards applicable to new or renovated parking lots.

16.36.100 Penalty. Any person who violates any provision of this chapter shall, upon conviction thereof, forfeit not less than $30.00 nor more than $200.00 for each offense. Each day, or part thereof, during which any such violation continues shall be deemed to constitute a separate offense. (Ord. 4456 §6, 1984).

16.36.120 Drive apron width--nonresidential use. A. In this section:

1. "Drive apron" means the connection between a drive-way and the traveled portion of a street, in the public right-of-way, including any sidewalk area abutting thereon.

B. A drive apron for access to any single parking space or to a parking lot shall not be less than 11 feet in width, nor more than 30 feet in width, measured at the inside edge of the sidewalk line or the street right-of-way line, and shall be so located as to minimize traffic hazard and congestion.

C. Provisions of subsection B. may be waived by the Plan Commission upon a finding that any one of the following conditions exist:

1. A wider driveway is needed for the turning movements of large trucks; or
2. A wider driveway is warranted by the volume of entering or exiting traffic; or
3. For other good reason directly related to traffic control and safety.

Driveways shall be no wider than necessary to safely accommodate entering and exiting traffic. Increasing driveway width shall not be used as a substitute for adequate site design. (Ord. 4647 §3, 1986; Ord. 4559 §2, 1984).

Chapter 16.38

AIRPORT BUILDING AND CONSTRUCTION STANDARDS

Sections:

16.38.010 Purpose.
16.38.020 When required.
16.38.030 Procedure.
16.38.040 Submittal requirements.
16.38.050 Review criteria.

16.38.010 Purpose. The purpose of these airport building and construction standards is: A. To administer effectively all adopted city ordinances and standards with respect to construction and site development;

B. To provide that development is approved and constructed in accordance with the availability of public facilities;

C. To identify and resolve potential site planning problems prior to the preparation of final building and construction plans;

D. To provide clear and uniform site plan submittal and review procedures and requirements for the development of the airport;

E. To provide the plan commission with the relevant information required to evaluate proposed site plans effectively;

F. To encourage the compatibility of the design and building of new development with surrounding land use. (Ord. 6320, 2002).

16.38.020 When required. Site plans shall be submitted, reviewed, and approved by the plan commission prior to the issuance of a building permit for any "new development" (as defined by s. 18.45.020 of the city code) at the airport. For this chapter, airport is defined as the area identified as the Chippewa Valley Regional Airport within the airport master plan. (Ord. 6320, 2002).

16.38.030 Procedure. The procedure for site plan review under this chapter shall be the same as s. 18.45.030 of the city code. (Ord. 6320, 2002).

16.38.040 Submittal requirements. The submittal requirements for site plan review under this chapter shall be the same as s. 18.45.040 of the city code except that the commission shall render a decision within 45 days of the receipt of the application by the department. (Ord. 6320, 2002).

16.38.050 Review criteria. The review criteria for site plan review under this chapter shall be the same as s. 18.45.050 of the city code. (Ord. 6320, 2002).

Title 17

SUBDIVISIONS

Chapters:

17.04 General provisions
17.08 Definitions
17.12 Design requirements
17.16 Submittal requirements
17.20 Procedures
17.24 Improvements

Chapter 17.04

GENERAL PROVISIONS

Sections:

17.04.010 Purpose.
17.04.015 Applicability.
17.04.020 Performance bond.
17.04.030 Successive divisions--Assessor's plat.
17.04.040 Plat recordation--Exceptions.
17.04.050 Variances.
17.04.060 Penalties--Remedies.

17.04.010 Purpose. A. The purpose of this chapter is to promote the public health, safety and general welfare of the community and these regulations are designed to lessen congestion in the streets and highways; to further the orderly layout and use of land; to secure safety from fire, panic and other dangers; to provide adequate light and air; to prevent the overcrowding of land; to avoid undue concentration of population; to facilitate adequate provision for transportation, water, sewage, schools, parks, playgrounds and other public requirements; to facilitate the further resubdivision of larger tracts into smaller parcels of land. These regulations are made with reasonable consideration, among other things, of the character of the city with a view of conserving the value of the buildings placed upon land, providing the best possible environment for human habitation, and for encouraging the most appropriate use of land throughout the city.

B. The purpose of these regulations pertaining to sanitary sewer requirements for lots which are created and less than 1 1/2 acre in size is to insure that such urban development occurs with city standard sewer, water and other urban services; to protect groundwater from pollution; to prevent urban sprawl development patterns; and to provide for a cost effective, planned expansion of city sewer, water and other services to accommodate the future growth and development of the community. (Ord. 4670 §1, 1986; prior code §18.01).

17.04.015 Applicability. Except where otherwise specifically provided, the provisions of this title shall apply to subdivisions within the limits of the city of Eau Claire and within the extraterritorial plat approval jurisdiction of the city. (Ord. 4670 §2, 1986).

17.04.020 Performance bond. If any plat shall show streets, alleys and public places which have not been improved, a surety bond issued by a surety company authorized to do business in the state of Wisconsin running to the city of Eau Claire is required to insure the performance of any contract made with the municipality after the approval of the plat relative to the improvement of such unimproved streets, alleys and public places. (Prior code §23.09).

17.04.030 Successive divisions--Assessor's plat. A. Where it is not practicable to require that a final plat of a subdivision created by successive divisions within the city limits be filed in accordance with this chapter, the city council may in lieu thereof order an assessor's plat to be made under Section 70.27 of the Wisconsin Statutes and may assess the cost thereof as provided in that section.

B. Regardless of the type of plat filed, any such subdivision shall comply with all provisions of this chapter to the extent that they may reasonably be applied. (Prior code §18.09).

17.04.040 Plat recordation--Exceptions. A. Any subdivision within the city or its extraterritorial plat approval jurisdiction shall be, and any other division may be, surveyed and a plat thereof approved and recorded as required by this chapter and Chapter 236, Wisconsin Statutes.

B. The provisions of this chapter shall not apply to:

1. Transfers of interests in land by will or pursuant to court order;
2. Leases for a term not to exceed ten years, mortgage or easements
3. The sale or exchange of parcels of land between owners of adjoining property if additional lots are not thereby created and the lots resulting are not reduced below the minimum sizes required by this chapter or other applicable laws or ordinances. (Prior code §18.03).

17.04.050 Variances. Where the plan commission finds that extraordinary hardships may result from strict compliance with this chapter, it may vary the provisions so that substantial justice may be done and the public interest secured; provided that such variation will not have the effect of nullifying the intent and purpose of this chapter. (Prior code §18.01).

17.04.060 Penalties--Remedies. Any person, firm or corporation who fails to comply with the provisions of this chapter or who willfully enters into a conspiracy with one or more other persons for the

purpose of circumventing the provisions of this chapter, shall, upon conviction thereof, forfeit not less than twenty-five dollars nor more than two hundred dollars and the cost of prosecution for each violation, and in default of payment of such forfeiture and costs shall be imprisoned in the county jail until payment thereof, but not exceeding thirty days. Each day a violation exists or continues shall constitute a separate offense. In addition, the remedies provided by Sections 236.30 and 236.31 of the Wisconsin Statutes shall be available to the city. Before a prosecution hereunder is commenced against any person, firm or corporation residing or having its principle office within the extraterritorial plat approval jurisdiction of the city, the town chairman of the town in which such violation was committed shall first be notified thereof. (Prior code §18.11).

Chapter 17.08

DEFINITIONS

Sections:

17.08.010 Collector streets.
17.08.015 Environmentally sensitive areas.
17.08.020 Extraterritorial plat approval jurisdiction.
17.08.030 Major streets and highways.
17.08.040 Marginal access streets.
17.08.050 Minor streets.
17.08.060 Street.
17.08.070 Subdivision, major.
17.08.080 Subdivision, minor.
17.08.090 Lot of record.

17.08.010 Collector streets. "Collector streets" means those which carry traffic from minor streets to the system of major streets and highways, including the principal entrance streets of a residential development and streets for circulation within such a development. (Prior code §18.02C(2)).

17.08.015 Environmentally sensitive areas. "Environmentally sensitive areas" are defined as being of the following areas:

A. Wetlands, as defined and regulated by the Wisconsin Department of Natural Resources.

B. Floodplains, as identified within the Federal Emergency Management Agency 100-year flood hazard zones and defined and regulated by chapter 18.11 of this code.

C. All areas of 20% or greater slope. (Ord. 6856 §1, 2008).

17.08.020 Extraterritorial plat approval jurisdiction. "Extraterritorial plat approval jurisdiction" is the unincorporated area within three miles of the corporate limits of the city, except as otherwise provided in Wis. Stats. s. 66.32. (Ord. 4670 §3, 1986; prior code §18.02B).

17.08.030 Major streets and highways. "Major streets and highways" means those which are used primarily for fast or heavy traffic. (Prior code §18.02C(1)).

17.08.040 Marginal access streets. "Marginal access streets" means those minor streets which are parallel to and adjacent to major streets and highways; and which provide access to abutting properties and protection from through traffic. (Prior code §18.02C(4)).

17.08.050 Minor streets. "Minor streets" are those which are used primarily for access to the abutting properties. (Prior code §18.02C(3)).

17.08.060 Street. "Street" means a way for vehicular traffic, other than an alley. (Prior code §18.02C(part)).

17.08.070 Subdivision, major. The division of a lot of record by the owner thereof or his agent or by the owner's immediate grantee or his agent for the purpose of conveyance of title or of building development for the act of division or successive division which creates 5 or more lots or outlots of 20 acres each or less in area within a period of 5 years. (Ord. 4670 §4, 1986; prior code §18.02A).

17.08.080 Subdivision, minor. The division of a lot of record by the owner thereof or his agent or by the owner's immediate grantee or his agent for the purpose of conveyance of title or of building development

for the active division or successive divisions which creates 2, 3 or 4 lots or outlots of less than 20 acres each in area within a period of 5 years. All minor subdivisions shall comply with all design requirements, improvements and other provisions as are required for major subdivision, unless specifically stated otherwise. (Ord. 4670 §4, 1986).

17.08.090 Lot of record. A lot, parcel or tract of land held under single ownership and of record in the County Register of Deeds office as of August 17, 1986. (Ord. 4670 §4, 1986).

Chapter 17.12

DESIGN REQUIREMENTS

Sections:

17.12.010 Standards conformance.
17.12.015 Compliance with zoning ordinance.
17.12.020 Streets--Generally.
17.12.030 Streets--Arrangement.
17.12.040 Railroad right-of-way or limited access highway.
17.12.050 Major streets.
17.12.060 Streets--Width.
17.12.070 Streets--Grades.
17.12.080 Streets--Horizontal curves.
17.12.090 Streets--Tangents.
17.12.100 Street names.
17.12.110 Streets--Cul-de-sac or dead end.
17.12.120 Streets--Reserve strips.
17.12.125 Streets--Tree plan.
17.12.130 Streets--Half street.
17.12.140 Intersections.
17.12.150 Alleys.
17.12.160 Easements.
17.12.170 Blocks--Pedestrian walks.
17.12.180 Lots--Generally.
17.12.190 Lots--Dimensions.
17.12.200 Lots--Corner.
17.12.210 Lots--Access to public street.
17.12.220 Lots--Right angles.
17.12.230 Lots--Lines.
17.12.240 Re-subdividable lots.
17.12.250 Lots--Municipal boundaries.
17.12.260 Lots--Double frontage.
17.12.270 Public sites--Open spaces.
17.12.280 Sidewalks--Plats approved after November 1, 1974.
17.12.290 Environmentally sensitive areas.

17.12.010 Standards conformance. The proposed subdivision shall conform to:

A. The provisions of Chapter 236, Wisconsin Statutes;

B. All applicable ordinances of the city;

C. Official map;

D. The rules of the state Board of Health relating to lot size and lot elevation if the subdivision is not served by a public sewer and provision for such service has not been made;

E. The rules of the state highway commission relating to safety of access and the preservation of the public interest and investment in the streets if the subdivision or any lot contained therein abuts on a state trunk highway or connecting street.

F. Applicable provisions of the Comprehensive Plan. (Ord. 6961 §2, 2011; Prior code §18.05A).

17.12.015 Compliance with zoning ordinance. No subdivision shall be approved within any area of the city, all or part of, which is designated as having a temporary zoning classification pursuant to the provisions of Wisconsin Statutes, Section 66.021(7)(a). No subdivision shall be approved in any area of the

city unless it conforms in every respect to the minimum requirements of the zoning district or districts within which the land included in the subdivision is located. (Ord. 4670 §7, 1986).

17.12.020 Streets--Generally. A. The streets shall be designed and located in relation to existing and planned streets, to topographical conditions and natural terrain features such as streams and existing tree growth, to public convenience and safety and in their appropriate relation to the proposed uses of the land to be served by such streets.

B. Whenever a new street is created or an existing street is relocated within the extraterritorial plat approval jurisdiction of the city, the owner of the land shall consult with the director of engineering of the city and the town officials involved as to the location of such street.

C. Conformity to Official Map. The arrangement, width and location of all streets shall conform to the official map. (Ord. 7202, 2016; Prior code §18.05B(1)(2)).

17.12.030 Streets--Arrangement. A. Major streets shall be properly integrated with the existing and proposed system of major streets and highways.

B. Collector streets shall be properly related to the mass transit system, to special traffic generating from facilities such as schools, churches and shopping centers, to population densities and to the major streets into which they feed.

C. Minor streets shall be laid out to conform as much as possible to topography, to discourage use by through traffic, to permit efficient drainage and sewer systems, to require the minimum amount of street necessary to provide convenient, safe access to property. (Prior code §18.05B(3)).

17.12.040 Railroad right-of-way or limited access highway. Where a subdivision borders on or contains a railroad right-of-way or limited access highway right-of-way, the plan commission may require a street on each side of such right-of-way, at a distance suitable for the appropriate use of the intervening land as for park purposes in residential districts or for commercial or industrial purposes in other districts. (Prior code §18.05(4)).

17.12.050 Major streets. Where a subdivision borders on or contains an existing or proposed major street, the plan commission may require that marginal access streets be provided, that the backs of lots abut the major streets and be provided with screen planting contained in a nonaccess reservation along the rear property line, that deep lots with rear service alleys be provided or that other provisions be made for the adequate protection of residential properties and the separation of through and local traffic. (Prior code §18.05B(5)).

17.12.060 Streets--Width. The right-of-way and roadway of all streets shall be of the width specified on the official map or master plan, or if no width is specified there, they shall be not less than the width specified below:

	Right-of-way	Roadway
Major streets	80 feet	48 feet
Collector streets	66 feet	36 feet
Minor streets	60 feet	30 feet
Marginal access streets	40 feet	24 feet

(Prior code §18.05B(6)).

17.12.070 Streets--Grades. The grade of major and collector streets within the city shall not exceed six percent nor shall the grade of other streets exceed ten percent, unless greater grade is necessitated by exceptional topography and approved by the plan commission. The minimum grade of all streets shall be 0.3%. (Ord. 2674, 1958; Prior code §18.05B(7),).

17.12.080 Streets--Horizontal curves. A. A minimum sight distance with clear visibility, measured along the centerline, shall be provided of at least three hundred feet on major streets, two hundred feet for collector streets and one hundred feet on minor streets.

B. Minimum Radii. The minimum radii or curvature on the centerline shall be not less than the following:

Major streets -- 300 feet
Collector streets -- 200 feet
Minor streets -- 100 feet. (Prior code §18.05B(8)).

17.12.090 Streets--Tangents. A tangent at least one hundred feet long shall be introduced between reverse curves on major and collector streets. (Prior code §18.05B(9)).

17.12.100 Street names. New street names shall not duplicate or too closely phonetically approximate the names of existing streets, but streets that are continuations of others already in existence and named shall bear the name of the existing streets. (Prior code §18.05B(10)).

17.12.110 Streets--Cul-de-sac or dead end. Depending upon topography, streets designed to have one end permanently closed shall not exceed five hundred feet in length and shall terminate with a turnaround of not less than one hundred feet in diameter of right-of-way and a roadway turnaround of eighty feet in diameter. (Prior code §18.05B(11)).

17.12.120 Streets--Reserve strips. Reserve strips controlling access to streets shall be prohibited, except where their control is definitely placed in the city under conditions approved by the plan commission. (Prior code §18.05B (12)).

17.12.125 Streets--Tree plan. All subdivisions shall comply with the provisions of the master street tree plan adopted in accordance with the provisions of subsection B(6) of Section 8.20.040 of this code. (Ord. 3773 §3, 1977).

17.12.130 Streets--Half street. Where an existing half street is adjacent to the proposed subdivision, the other half of the street in such subdivision shall be dedicated by the subdivider. (Prior code §18.05B(13)).

17.12.140 Intersections. A. Streets shall intersect as nearly as possible at right angles and not more than two streets shall intersect at one point unless approved by the plan commission.

B. Street jogs with centerline offsets of less than one hundred twenty-five feet shall be avoided. Where streets intersect major streets their alignment shall be continuous. (Prior code §18.05C).

17.12.150 Alleys. A. Alleys shall be provided in all commercial and industrial districts, except that the plan commission may waive this requirement where other definite and assured provision is made for service access such as off-street loading and parking consistent with and adequate for the uses proposed.

B. Alleys shall not be approved in residential areas unless necessary because of topography or other exceptional circumstances.

C. The width of alleys shall not be less than twenty feet.

D. Dead-end and T alleys shall be avoided where possible. However, where a dead-end alley is unavoidable, adequate turnaround facilities at the dead end shall be provided as determined by the plan commission. (Prior code §18.05D).

17.12.160 Easements. A. Easements across lots shall be provided for utilities where required by the plan commission and shall be at least twelve feet wide. For the purpose of this subsection, a cable television system as defined in Section 4.04.020 B of this code shall be deemed to be a utility.

B. Where a subdivision within the city is traversed by a watercourse, drainage way, channel or stream, there shall be provided a stormwater easement or drainage right-of-way conforming substantially with the lines of such watercourse, and such further width or construction, or both, as will be adequate for the purpose. (Ord. 4005 §9, 1979; prior code §18.05E).

17.12.170 Blocks--Pedestrian walks. A. The length, widths and shapes of blocks shall be such as are appropriate for the locality and the type of development contemplated, but block lengths in residential areas shall be not normally less than four hundred feet nor more than one thousand five hundred feet between street lines.

B. Pedestrian crosswalks, not less than ten feet wide, may be required by the plan commission through the center of blocks where deemed essential to provide circulation or access to schools, playgrounds, shopping centers, transportation and other community facilities. (Prior code §18.05F).

17.12.180 Lots--Generally. The size, shape and orientation of lots shall be appropriate for the location of the subdivision and for the type of development and use contemplated. (Prior code §18.05G(1)).

17.12.190 Lots--Dimensions. A. Lot dimensions shall conform to the requirements of the applicable zoning ordinance and in no case in a residential district have less than a minimum width of sixty feet at the building line and a minimum area of six thousand square feet.

B. Residential lots to be served by private sewage disposal facilities shall comply with the rules of the state Board of Health.

C. Depth and width of properties reserved or laid out for commercial and industrial purposes shall be adequate to provide for the off-street service and parking facilities by applicable ordinances.

D. Excessive depth in relation to width shall be avoided. A proportion of two and one-half to one shall normally be considered as a desirable maximum for lot widths of sixty feet or more. (Prior code §18.05G(2)).

17.12.200 Lots--Corner. Corner lots for residential use shall have extra width to permit building setback from both streets as required by applicable zoning ordinance. (Prior code §18.05G(3)).

17.12.210 Lots--Access to public street. Every lot shall normally front or abut on a public street. Lots with an access only to private drives or streets shall be permitted only with plan commission approval. (Prior code §18.05G(4)).

17.12.220 Lots--Right angles. Lots at right angles to each other shall be avoided wherever possible, especially in residential areas. (Prior code §18.05G(5)).

17.12.230 Lots--Lines. Side lot lines shall be substantially at right angles or radial to street lines. (Prior code §18.05G(6)).

17.12.240 Re-subdividable lots. For any lot created which is greater than 1 1/2 acres in size the city may require that such lots be divided in such a manner as to allow for the re- subdividing of the lots at some future date when city services are available. To this extent, the city may require additional frontage or other dimensional restrictions or regulate the location of private septic systems on the lot. If such requirements are made a part of approval of any lot, such requirement shall be recorded with the final plat or certified survey map. (Ord. 4670 §6, 1986; prior code §18.05G(7)).

17.12.250 Lots--Municipal boundaries. Lots shall follow governmental boundary lines whenever practicable, rather than cross them. (Prior code §18.05G(8)).

17.12.260 Lots--Double frontage. Double frontage and reversed frontage lots shall be avoided except where necessary to provide separation of residential development from traffic arteries or to overcome specific disadvantages of topography and orientation. (Prior code §18.05G(9)).

17.12.270 Public sites--Open spaces. In the design of the plat, due consideration shall be given by the subdivider and the plan commission to the reservation of suitable sites of adequate area for future schools, parks, playgrounds and other public purposes. (Prior code §18.06).

17.12.280 Sidewalks-Plats approved after November 1, 1974. Prior to the issuance of a building permit for any lot within a block, the subdivider or property owner shall execute and file with the city's Administrator of Inspection and Zoning a written document certifying installation of a public sidewalk abutting such lot or execute a petition to the city for such installation and the levy of special assessments in connection therewith and waiving notice and hearing pursuant to Wis. Stats. s. 66.60 (18). The subdivider or property owner shall construct such standard sidewalks to the grade and to specifications established by the city engineer. The work shall be inspected by the city engineering division. A developer or property owner may be granted an extension by the city's Administrator of Inspection and Zoning, for good cause, of not exceeding eight months after issuance of a building permit, in order to complete construction of the required sidewalk. Such sidewalk shall also be constructed by the developer at the developer's cost along lots or parcels of land dedicated to the public in the plat. The construction of sidewalk may be deferred by the city council upon a written request for deferral by the subdivider or property owner for those portions of the plat where the city council specifically finds that by reason of topography the construction of the sidewalk would be impossible or impracticable or where because of other conditions the sidewalk would serve no reasonably foreseeable public purpose. This section shall apply only to final plats approved after November 1, 1974. (Ord. 6285 §2, 2002; Ord. 4510 §2, 1984; Ord. 3508(part), 1975).

17.12.290 Environmentally sensitive areas. Environmentally sensitive areas shall be identified and legally described by all major or minor subdivisions.

A. No development or land disturbance activity shall be allowed within any environmentally sensitive area except after issuance of a permit by the city, such permit only to be issued if the owner demonstrates the proposed development or land disturbance activity is expressly allowed under any of the following:

1. Chapter 18.11, Floodplain Overlay District, for floodplain areas.
2. Chapter 18.12, Shoreland-Wetlands Overlay District, for wetland areas.
3. The provisions of the Chippewa Falls/Eau Claire Urban Sewer Service Area Plan, adopted by reference herein, for all areas of 20% or greater slope.

B. Any grading or land disturbance of any environmentally sensitive area commenced without prior written approval from the city under the provisions of subsection A. herein shall constitute a public nuisance and, in addition to fine or forfeiture, the city may pursue any remedy allowed by chapter 9.36 of this code. (Ord. 6856 §2, 2008).

Chapter 17.16

SUBMITTAL REQUIREMENTS

Sections:

17.16.010 Preliminary consultation--Necessary data.
17.16.020 Drawing contents--Specifications.

17.16.010 Preliminary consultation--Necessary data. The following information shall be provided at the time of the preliminary consultation:

A. (Applicable within the city of Eau Claire only.) Information including data on existing covenants, easements, flowage rights, land characteristics and available community facilities and utilities; and information describing the subdivision proposal such as number of residential lots, typical lot width and depth, business areas, playgrounds, park areas and other public areas, tree planting, proposed protective covenants and proposed utilities and street improvements.

B. (Applicable within the city of Eau Claire and within the extraterritorial plat approval jurisdiction of the city.) A sketch plan showing in simple sketch form the proposed layout of streets, lots and other features in relation to existing conditions. The sketch plan may be a free-hand pencil sketch made directly on a print of the topographic survey if one is available. (Ord. 4670 §7, 1986).

17.16.020 Drawing contents--Specifications. The preliminary plat shall be drawn with waterproof, nonfading black ink or legibly drawn with pencil on tracing cloth or tracing paper of good quality on a scale of not more than one hundred feet to an inch and shall show correctly on its face:

A. Date, scale and north point;

B. The proposed subdivision name, which shall not duplicate the name of any plat previously recorded in Eau Claire or Chippewa counties;

C. The name and address of the owner, the subdivider and the registered land surveyor preparing the plat;

D. Location of the subdivision by government lot, quarter- quarter section, section, township, range and county;

E. Location, widths and names of all existing and platted streets, alleys or other public ways and easements, railroad and utility rights-of-way, parks, cemeteries, water courses, drainage ditches, permanent buildings, bridges and other pertinent data immediately adjacent to the proposed subdivision, as determined by the plan commission;

F. The water elevation of adjoining lakes or streams at the date of the survey and the approximate high and low water elevations of such lakes or streams. All elevations shall be referred to sea level datum plane;

G. Layout and width of all new streets and rights-of-way, such as alleys, highways, easements for sewer, water mains, and other public utilities;

H. Directions and distances to nearest water and sewer mains;

I. Approximate dimensions of and areas of typical lots;

J. Approximate location and areas of property proposed to be dedicated for public use or to be reserved by deed covenant for use of all property owners in the subdivision with the conditions, if any, of such dedication or reservation;

K. Contours at vertical intervals of not more than 5 feet or at more frequent intervals may be required by the plan commission where topographical data is available for the area in which the proposed subdivision is located.

L. Identity and legal description of all environmentally sensitive areas for all major or minor subdivisions. (Ord. 6856 §3, 2008; Ord. 4670 §7, 1986).

Chapter 17.20

PROCEDURES

Sections:

17.20.010 Preliminary consultation.
17.20.020 Major subdivisions.
17.20.030 Minor subdivisions.
17.20.035 Condominium plats.
17.20.040 Plats within the extraterritorial plat approval jurisdiction.
17.20.050 Creating additional lots in platted subdivisions.
17.20.060 Consolidating parcels.
17.20.070 Fees.

17.20.010 Preliminary consultation. Previous to filing a certified survey map or a preliminary plat, the subdivider may consult the department of community development and department of engineering for advice and assistance. This consultation is neither formal nor mandatory, but is intended to inform the subdivider of the purpose and objectives of these regulations, the comprehensive plan and official map, and to otherwise assist the subdivider in planning his development. In so doing, both the subdivider and the city may reach mutual conclusions regarding the general program and objectives of the development. (Ord. 4670 §8, 1986).

17.20.020 Major subdivisions. A. Preliminary plat. Before submitting a final plat for approval, the subdivider shall cause to be prepared a preliminary plat by a registered land surveyor, in accordance with the requirements in chapter 236, Wisconsin Statutes, and chapter 17.16 of this title and submit at least 12 copies of the plat to the department of community development at least 10 working days prior to the meeting of the plan commission at which action is desired.

1. The preliminary plat shall cover the entire area owned or controlled by the subdivider even though a lesser portion thereof is proposed for development at the time. The plan commission may waive this requirement where it is unnecessary to fulfill the purpose of this title and undue hardship would result from the strict application thereof.

2. The preliminary plat shall be reviewed by the plan commission and city staff for conformance with this title and all ordinances, rules, regulations and comprehensive plans which affect it. The department of community development shall transmit copies of the preliminary plat to the department of engineerimg, and all affected boards, commissions, or departments, all affected local utility companies and the regional planning agency for their review and recommendations concerning matters within their jurisdiction. Their recommendations shall be transmitted to the plan commission within a staff report.

3. The plan commission shall within 60 days of the filing of the plat, approve, approve conditionally, or reject the plat. One copy of the plat shall thereupon be returned to the subdivider with the date and action endorsed thereon; and if approved conditionally or rejected, a letter setting forth the conditions of approval or reasons for rejection shall accompany the plat.

4. Approval or conditional approval of a preliminary plat shall not constitute automatic approval of the final plat, except that if the final plat is submitted within 36 months of preliminary plat approval and conforms substantially to the preliminary plat layout as indicated in section 236.11(1)(b) of the Wisconsin Statutes, the final plat shall be entitled to approval with respect to such layout. The preliminary plat shall be deemed an expression of approval or conditional approval of the layout submitted as a guide to the preparation of the final plat which will be subject to further consideration by the city council.

B. Final plat. The subdivider shall prepare a final plat and a letter of application in accordance with this title in compliance with the procedures for approval of plats of chapter 236 of the Wisconsin Statutes, and shall file six (6) copies of the plat and the application with the department of community development at least ten (10) working days prior to the meeting of the plan commission at which action is desired. Upon approval of the final plat by the state of Wisconsin, the subdivider shall forward one (1) mylar plot or copy, a photographic silver haloid image mylar, or mylar sepia of the final plat to the department of engineering . The surveyor, in addition to the required mylar copy, shall provide a computer file on disk, in a xxxx.DGN or xxxx.DWG format, for final plats which have been prepared by the use of electronic media using computer aided design and drafting (CADD).

1. The plan commission shall examine the final plat as to its conformance with the approved preliminary plat and conditions of approval of the preliminary plat, this title and all ordinances, rules, regulations and comprehensive plan which may affect it and shall recommend approval, conditional approval or rejection of the plat to the city council.

2. The final plat may, if permitted by the city council, after review and recommendation by the plan commission, constitute only that portion of the approved preliminary plat which the subdivider proposes to record at that time.

3. If the final plat is not submitted within 6 months of the approval of the preliminary plat, the city council may refuse to approve the final plat, even though it may conform to the preliminary plat.

4. The plan commission shall transmit the plat, together with its recommendations to the city council within 30 days of the date of filing of the final plat. The city council shall approve or reject the final plat within 60 days of its submission, unless the time is extended by agreement with the subdivider. Reasons for rejection shall be forwarded to the subdivider in writing.

5. After the final plat has been approved by the city council and improvements either installed or a contract and bond insuring their installation filed in accordance with this title, the city clerk shall cause the certificate inscribed upon the plat attesting to such approval to be duly executed and the plat returned to the subdivider for recording.

6. The subdivider shall file 10 copies of the final plat, as recorded with the department of community development for distribution to appropriate local agencies and offices. (Ord. 6961 §3, 2011; Ord. 5596, 1996; Ord. 4670 §8, 1986).

17.20.030 Minor subdivisions. The subdivider or developer shall submit a certified survey map as defined in chapter 236, Wisconsin Statutes, accompanied by plans for required improvements. This certified survey map shall contain all information required on a preliminary plat as specified in this title and chapter 236.34, Wisconsin Statutes. Within 30 days of receiving copies of the certified survey map of a minor subdivision, the city shall take action to approve, approve conditionally, or reject such map and shall state in writing any conditions of approval or reasons for rejection.

A. Certified survey maps for minor subdivisions which do not contain dedications to the public shall be reviewed and approved in the following manner. Within 5 working days from the date of submission of the maps, unless the time is extended by agreement with the subdivider, the department of community development shall review the map along with the city engineer and shall approve, conditionally approve or reject the map. If the map is approved, the department of community development shall cause to have it so certified on its face and the map returned to the subdivider. If conditionally approved or rejected, the conditions applied or the reasons for rejection shall be so stated in writing and the subdivider notified. Any conditions applied by the department of community development shall be satisfied prior to the recordation of the map. Any decision of the department of community development may be appealed to the plan commission within 15 days from the date of the decision.

B. Certified survey maps for minor subdivisions which contain dedications to the public shall be reviewed in the following manner. Within 10 days from the date of submission of the map, unless the time is extended by agreement with the subdivider, the department of community development shall refer the map along with recommendations to the plan commission. The plan commission shall review the survey map and make a recommendation to the city council. The city council shall approve, conditionally approve, or reject the dedication of streets or other public areas shown on the map. When a certified survey map is conditionally approved or rejected, the conditions applied or the reasons for rejection shall be communicated to the subdivider in writing. Any condition applied shall be satisfied prior to the recordation of the map. If dedications are approved, the subdivider shall enter into any surety bond or other performance contract required by this title prior to recording.

C. The certified survey map, along with all covenants or restrictions placed as a condition of approval by the city shall be submitted to the register of deeds for recording within 6 months of the date of approval. Prior to recording, the subdivider shall obtain the signatures on the accompanying certificates as required by Chapter 236.34, Wisconsin Statutes, and covenants or restrictions placed as a condition of approval by the city. The certificate of approval by the city shall be the last signature obtained prior to recording. (Ord. 4670 §8, 1986).

17.20.035 Condominium plats. Condominium projects shall be reviewed on the basis of a condominium plat prepared pursuant to Wis. Stat. Chapter 703 and other applicable statutes, as well as these subdivision regulations, as a plat or certified survey map for the land development of the property. Major subdivision procedures in s. 17.20.020 shall apply to review of all condominium plats. (Ord. 6211, 2001).

17.20.040 Plats within the extraterritorial plat approval jurisdiction. A. When the land to be subdivided lies within the 3 mile extraterritorial plat approval jurisdiction of the city of Eau Claire, the subdivider shall proceed as specified in the applicable county subdivision ordinance. Approval agencies shall be as specified in Chapter 236 of the Wisconsin Statutes and the subdivider must comply with the land division regulations of said agencies or units of government. All improvement requirements specified by the city of Eau Claire in matters over which they have jurisdiction shall be met before the filing of the final plat or certified survey map.

B. Purpose. The following policies regarding the city's approval of divisions of land within the 3-mile extraterritorial area are adopted in order to protect the rural character, farming viability, and environmentally sensitive areas, and to promote efficient re-subdividing, in-fill development, compact urban development of land, and compatibility of surrounding land use within the area.

C. Procedure. Major subdivisions shall be as specified in s. 17.20.020. Minor subdivisions shall be as specified in s. 17.20.030.

D. Subdivisions shall be permitted based on an overall density standard of one (1) unit per 10 acres. The city will consider the following criteria in its review of these subdivisions:

1. Each lot shall meet health code requirements for on-site sewage treatment and private water wells.

2. The proposed lot layout for the overall parcel shall locate structures on building sites that have the least impact on environmentally sensitive areas and are less well suited for farming and agricultural uses.

3. The remainder of the overall parcel not developed with lots and roads shall require a conservation easement precluding further development until such time as urban density is desired.

4. The proposed lot layout for the overall parcel shall provide for the future efficient re-subdividing for urban densities.

E. Exception. In accordance with the provisions of the Comprehensive Plan contained in section 2-16 (3) thereof, exceptions to the 10-acre density standard for rural homes may be allowed pursuant to execution of an intergovernmental agreement under s. 66.0301, Wis. Stats., between the city and the applicable town regarding cooperative application of the following extraterritorial subdivision standards. Such an agreement was entered into as of February 16, 2011, (the "Agreement"). Only to the extent, and expressly contingent upon, said Agreement or a successor agreement that expressly references and extends the exceptions stated herein, remains valid and in full legal effect with the Town in which the subject property is located, then the following exceptions to the 10-acre density standard may be applied as found applicable:

1. Infill Lot Land Divisions within the Sewer Service Area. The proposed lots are infill lots located in whole or part within the City's Sewer Service Area (the "SSA") that meet all the following criteria as determined by the Plan Commission:

a) The proposed lots are in areas that have been previously divided into smaller lots.

b) The proposed lots cannot be reasonably served with city utilities due to natural barriers, i.e., creeks or hills, man-made barriers, major highways, or significant existing development.

c) It would be cost prohibitive to serve the proposed lots with city utilities.

d) Creating the proposed lots is a means of lessening development pressure on larger tracts of land outside the SSA.

e) The proposed lots must be created by a Certified Survey Map (4 lots or less).

f) The proposed lots must be reasonably consistent in size with the existing adjacent lots.

2. Common Wastewater Treatment. The proposed lots will be served by a sewer connected to a common wastewater treatment system approved under COMM 83, Wisconsin Administrative Code. All sewer mains, trunk, and lateral lines must meet City of Eau Claire standards for such facilities. If the proposed lots will be served by a community water supply system approved under NR 811, all water lines and mains must meet City of Eau Claire standards for such facilities. The lots must meet the access and lot design standards of the City of Eau Claire and the respective Town. The proposed lot layout for the overall parcel must provide for efficient re-subdividing for urban densities and cost-effective and orderly extension of public streets and utilities at the time that public utilities are available to the site. In addition, the property must be part of a cooperative boundary agreement approved pursuant to § 66.0307 Wis. Stats., requiring the current owner and any future owner of the divided lots to annex to the City of Eau Claire at the time that any adjoining contiguous parcel is annexed or petitions to annex and public sanitary sewer service and public water supply are available from the City of Eau Claire.

3. Land Divisions in Extraterritorial Jurisdiction (the "ETJ") but Outside the SSA.

a) The proposed lots are completely outside the City's SSA, satisfy minimum lot sizes as specified by the applicable Town consistent with the Agreement, which provides the following:

i) For areas designated Rural Residential (RR) or Rural Residential Cluster (RRC) within the Agreement, the maximum base density of one dwelling unit per two acres is allowed.

ii) For areas designated Rural Preservation (RP) or Rural Transition (R-T) within the Agreement, the maximum base density of one dwelling unit per five acres is allowed.

b) The following criteria shall be satisfied in the review of residential land divisions:

i) Each lot shall meet health code requirements for on-site sewage treatment and private water wells.

ii) The proposed lot layout for the overall parcel shall locate structures on building sites that have the least impact on environmentally sensitive areas and are less well suited for farming and agricultural uses.

iii) The proposed land division shall be consistent with the comprehensive plan of the respective Town.

c) Exceptions to base residential density standard shall be considered for infill lots

based on complying with all of the following criteria as determined by the Plan Commission:

i) The proposed lots are in areas that have been previously divided into smaller lots.

ii) The proposed lots must be created by a certified survey map (4 lots or less).

iii) The proposed lots must be reasonably consistent in size with the existing adjacent lots.

iv) Creating the proposed lots is a means of lessening development pressure on larger tracts of land.

4. Conservation Subdivision. The proposed lots are completely outside the City's SSA and are in a conservation subdivision that is regulated and approved under the Conservation Subdivision Ordinance of the County and meet the following criteria:

a) Proposed lots in areas classified as Rural Preservation (RP) and Rural Transition (RT), as depicted on the ETJ Map as provided in the Agreement, shall not exceed a maximum density of one single-family lot per five (5) acres of potentially development land with minimum lot sizes not less than one (1) acre. As an example, this formula would yield up to 8 one acre lots in a conservation subdivision and 32 acres of preserved farmland for a parcel with 40 acres of potentially developable land.

b) Proposed lots in areas classified as Rural Residential (RR) and Rural Residential Cluster (RRC), as depicted on the ETF Map as provided in the Agreement, shall have a minimum lot size of at least one (1) acre in size and at least 40% of the potentially developable area within the parent parcel shall be placed under a conservation easement or comparable protection. As an example, this formula would yield a maximum of 24 single-family lots and 16 acres of protected open space for a parcel with 40 acres of potentially developable land.

c) For the purposes of these provisions, "potentially developable land" shall be defined as privately-owned land that is outside any WDNR delineated wetland or FEMA delineated 100-year floodplain and has less than a 20 percent slope.

5. Certain Non-Residential Land Divisions. The following exception is provided in the Towns of Brunswick, Pleasant Valley, Seymour, and Washington, for non-residential land divisions completely outside the City's SSA which shall be permitted based on land use and lot dimensional requirements in County and Town regulations and plans and which shall be reviewed by the Plan Commission based on these policies from the Agreement:

a) The preferred commercial uses in rural areas are agricultural-related uses, such as, veterinarian clinics, greenhouses/nurseries, or agricultural implement dealers.

b) Industrial and commercial development shall be encouraged to locate near incorporated areas, existing business developments, or along collector and arterial roadways.

c) When rezoning is requested, only that portion of land necessary for the contemplated use shall be rezoned. se shall be rezoned.

6. Certain Non-residential Land Divisions in the Town of Wheaton. The following exception is provided in the Town of Wheaton for non-residential land divisions for the area shown as commercial or industrial around the CTH "T" and STH 29 interchange on the attached map(on file in the Clerk's office):

a) minimum lot size is 1.66 acres.

7. Certain Non-residential Land Divisions in the Town of Union. The following exception is provided in the Town of Union for non-residential land divisions for the area shown as industrial/commercial near the I-94/Exit 59 interchange on the attached map:

a) Any land division intended to create a site for a retail or service land use will be reviewed as per the provision of the Intergovernmental Agreement with the Town of Union, Section 3. Land Uses, dated January 17, 2012.

b) The minimum lot size for industrial/commercial lots within the areas depicted on the attached map and outside the SSA (Sewer Service Area) is 5 acres.

c) The minimum lot size for industrial/commercial lots within the areas depicted on the attached map and inside the SSA (Sewer Service Area) is 10 acres, except in highly divided areas exceptions may be granted by the Plan Commission based on the proposed land division meeting all of the following criteria:

1) The proposed lots are in areas that have been previously divided into smaller lots.

2) The proposed lots cannot be reasonably served with City utilities due to natural barriers, i.e., creeks or hills, man-made barriers, major highways, or significant existing development.

3) It would be cost prohibitive to serve the proposed lots with City utilities.

4) Creating the proposed lots is a means of lessening development pressure on larger tracts of land outside the SSA.

5) The proposed lots must be created by a Certified Survey Map (4 lots or less).

6) The proposed lots must be reasonably consistent in size with the existing adjacent lots and shall be at least 1.5 acres.

(Ord. 7190, 2016; Ord. 7003, 2012; 6992, 2011; Ord. 6961, 2011; Ord. 6784, 2007; Ord. 4670 §8, 1986).

17.20.050 Creating additional lots in platted subdivisions. When it is proposed to divide land to create additional parcels of land, any one of which is less than 20 acres in size, or when it is proposed to divide a block, lot or outlot to create additional parcels or building sites within a recorded subdivision plat without changing the boundaries of said subdivision or land dedicated to the public, the subdivider shall prepare a certified survey map in accordance with this title and shall file an adequate number of copies with the department of community development at least 5 working days prior to the meeting at which action is desired. The department of community development shall within 30 days approve, approve conditionally, or reject the map.

If the map is rejected, the reasons shall be stated in writing and a copy forwarded to the subdivider. If the map is approved, a certified survey map shall be submitted by the subdivider to the department of community development within 30 days. The department of community development shall certify on the face of the certified survey map its approval and return the map to the subdivider. The subdivider shall record the map with the county register of deeds within 6 months of its approval. (Ord. 4670 §8, 1986).

17.20.060 Consolidating parcels. When it is proposed to divide land for the purpose of consolidating parcels to enlarge building sites, or when it is proposed to divide a block, lot or outlot for enlargement of parcels or building sites within a recorded subdivision plat, without changing the boundaries of said subdivision or affecting land dedicated to the public, the subdivider shall prepare a plot plan showing the dimensions of all parcels affected by the division.

The department of community development shall within 5 working days approve, approve conditionally or reject the plot plan. If the plot plan conforms with the requirements of this title and those specified in the zoning ordinance, the plot plan shall be approved. If the plot plan is rejected, the reason or reasons therefore shall be cited in a written statement forwarded to the subdivider. Any decision of the department of community development may be appealed to the plan commission within 15 days from the date of the decision. (Ord. 4670 §8, 1986).

17.20.070 Fees. Applicable within the city of Eau Claire.

A. A review fee as stated in the City of Eau Claire Fees and Licenses Schedule shall be submitted with all certified survey maps.

B. A review fee as stated in the City of Eau Claire Fees and Licenses Schedule shall be submitted with all preliminary plats.

C. No review fee shall be required for submittal of the final plat unless the final plat contains only a portion of the preliminary plat. In such case, a review fee as stated in the City of Eau Claire Fees and Licenses Schedule shall be submitted with each final plat in excess of one. (Ord. 6363 §37, 2002; Ord. 6243 §1, 2001; Ord. 4670 §8, 1986).

Chapter 17.24

IMPROVEMENTS*

Sections:

17.24.010 Monument specifications.
17.24.020 Methods of financing.
17.24.030 Technical requirements.
17.24.040 Sanitary sewer requirements.
17.24.060 Utilities underground.

17.24.010 Monument specifications. The subdivisions shall be monumented as required by Section 236.15 of the Wisconsin Statutes, which is adopted by reference. All such monuments shall contain sufficient iron for magnetic detection. (Prior code §18.07A).

17.24.020 Methods of financing. A. No final plat for the subdivision of land in the city of Eau Claire, or within an area for which an annexation petition has been filed, shall be approved by the city council until the subdivider has made arrangements to install required improvements, as provided under subsection B. In this

section, "required improvements" means street improvements, including curb and gutter, water facilities, sanitary sewer facilities and storm drainage facilities, to the extent required by the city.

B. Required improvements may be provided by the subdivider in one of the following ways:

1. Installation by the subdivider or by private contract, prior to approval of the certified survey map or final plat, at subdivider's cost.

2. By entering into a contract with the city before the final plat is submitted for approval, whereby subdivider agrees to install the required improvements. The subdivider shall file with said contract a certified check or letter of credit for a two-year period from a public depository as defined in s. 34.01(5), Wis. Stats., such as a bank, savings and loan, or credit union, subject to the approval of the finance director, in an amount equal to the estimate of cost of said improvements as prepared by the director of engineering. Such certified check or letter of credit shall constitute a guarantee that such improvements will be completed by the subdivider not later than three years from the date of recording of the plat. It shall constitute a further guarantee that all obligations to subcontractors for work on the development are satisfied. The contract may either provide for the subdivider to install the improvements or have the city complete the improvements with all costs incurred, including engineering and inspection costs, reimbursed to the city by the subdivider, the same to be guaranteed as provided herein.

---

* Improvements set out in this chapter are applicable to subdivisions or parts of subdivisions within the Eau Claire city limits.

All contractors and subcontractors who are to be engaged in construction or improvements on dedicated street right-of-way shall be designated as qualified for such work by the director of engineering.

C. The city council reserves the right to exercise special assessment powers at such times and under such circumstances as it deems necessary and desirable. (Ord. 7202, 2016; Ord. 5964, 1999; Ord. 4973, 1989).

17.24.030 Technical requirements. All improvements required in Section 17.24.020 must meet the specifications of the director of engineering and the state of Wisconsin. (Ord. 7202, 2016; Prior code §18.07B(2)(a)).

17.24.040 Sanitary sewer requirements. A. In this section:

1. "Public wastewater collection system" means a system of sanitary sewers owned, maintained, operated and controlled by a governmental entity on behalf of the public.

2. "Sanitary sewer" means all structures, lift stations, pipes or conduits by which sewage is collected and disposed of, excepting plumbing inside and in connection with buildings served, and service pipes from building to public street or right-of-way.

3. "Sewage" means the wastewater created in and to be conducted away from residences, commercial and industrial establishments, and public buildings as defined in Wis. Stats. s. 101.01(2).

B. This section shall apply to all major or minor subdivisions located within the city or within the extraterritorial plat approval jurisdiction of the city which create a lot or lots which are less than 1 1/2 acres in size. No major or minor subdivisions with a lot or lots less than 1 1/2 acres in size shall be approved unless such lots contained within the subdivision are to be served by a readily available public wastewater collection system. In this section "readily available" shall mean that a public wastewater collection system is within, immediately adjacent to, or otherwise capable of immediate extension to the proposed subdivision, all as determined by the city. No building or premises within such subdivision shall be constructed or occupied unless its sewage is collected, transported and treated by a public wastewater collection system.

C. As to major subdivisions, this section shall apply to all preliminary plats which have been submitted to, but not approved by, the city as of August 17,1986. As to minor subdivisions, this section shall apply to all certified survey maps submitted to the city after said effective date.

D. This section shall not apply to any area which is owned by the city at the time of its annexation and is annexed to the city as non-contiguous territory. (Ord. 4670 §5, 1986).

17.24.060 Utilities underground. A. All new electric distribution lines (excluding main line feeders and transmission lines), telephone and telegraph lines (excluding main line feeder cables), community antenna television cables and service to customers in a newly platted residential area shall be buried underground; unless the council shall specifically find after study and recommendation by the plan commission that:

1. The placing of utilities underground would not be compatible with the planned development;

2. The additional cost of burying such facilities would create an undue hardship; or

3. Topographical, soil or other physical conditions make such installation unreasonable or impractical.

B. The platter shall be responsible for complying with the requirements of this section in a newly platted residential area and shall submit to the plan commission a written instrument from the companies responsible for such lines and cables showing that the necessary arrangements with such companies for such installation have been made. (Ord. 3114 §I, 1970; Prior code §18.07B(2)(d)).

Title 18

ZONING CODE

Chapters:

18.01 Title
18.02 Definitions
18.03 Zoning Districts and Maps
18.04 Residential Districts
18.05 Commercial Districts
18.06 Industrial Districts
18.07 P -- Public Properties District
18.08 CV -- Conservancy District
18.09 H -- Highway Overlay District
18.10 PD -- Planned Development
18.11 F -- Floodplain Overlay District
18.12 SW -- Shoreland-Wetlands Overlay District
18.13 R-1B -- Mobile Home Park District
18.14 TND -- Traditional Neighborhood Development
18.15 MX – Mixed-use Development Overlay District
18.20 Special Provisions
18.25 Off-Street Parking and Loading Requirements
18.30 Accessory Uses
18.35 Conditional Uses
18.40 Nonconforming Uses, Structures and Lots
18.45 Site Plans
18.50 Administration and Enforcement
18.55 Board of Appeals
18.60 Official Map
18.65 Amendments and Rezoning
18.70 Plan Commission

Chapter 18.01

TITLE

Sections:

18.01.010 Short Title.
18.01.020 Purpose.
18.01.030 Authority.
18.01.040 Conformity to Comprehensive Plan.

18.01.010 Short Title. This title shall be known and may be cited as the Zoning Code. (Ord. 5037, 1990).

18.01.020 Purpose. The purpose of the zoning code is to protect the public health, safety, and welfare; implement and achieve the policies and goals of the city's comprehensive plan; provide adequate light and air; prevent the overcrowding of land; secure safety from fire, panic, and other dangers; and lessen congestion in the streets; encourage efficiency and economy in the use and development of land; facilitate adequate provisions for transportation, water, sewage, schools, parks, and other public requirements; and allow for the development of residential, commercial, and industrial areas which function in an orderly and

harmonious manner, both internally and in relation to each other, and which promote the convenience and prosperity of the citizenry. (Ord. 5037, 1990).

18.01.030 Authority. This title is created pursuant to authority under Section 62.23(7) Wisconsin Statutes. (Ord. 5037, 1990).

18.01.040 Conformity to Comprehensive Plan. The regulations and restrictions established herein are intended to implement the purpose of this title and the goals of the comprehensive plan. (Ord. 5037, 1990).

Chapter 18.02

DEFINITIONS

Sections:

18.02.010 General Interpretations.
18.02.020 Definitions.

18.02.010 General Interpretations. For the purpose of this title, the following rules shall apply:

A. The word "including" means "including but not limited to".

B. The word "shall" is always mandatory and not discretionary.

C. The word "building" includes the word "structure"; and the word "dwelling" includes the word "residence". A "building" or "dwelling" includes any part thereof.

D. The words "used" or "occupied" include the words "intended", "designed", or "arranged" to be used or occupied.

E. The word "lot" includes the words "plot" and "parcel".

F. Unless the context clearly indicates the contrary, where a regulation involves two or more items, conditions, provisions, or events connected by the conjunction "and", "or", "either... or", the conjunction shall be interpreted as follows:

1. "and" indicates that all connected items, conditions, provisions, or events shall apply;

2. "or" indicates that the connected items, conditions, provisions, or events may apply singularly or in any combination;

3. "either... or" indicates that the connected items, conditions, provisions, or events shall apply singularly but not in combination.

G. Whenever a reference is made to several sections and the section numbers are connected by the word "to", the reference includes both sections whose numbers are given and all intervening sections. (Ord. 5037, 1990).

18.02.020 Definitions. A. For the purpose of this title, the following words shall have the following meaning:

1. Adult Book Store. An establishment having as a predominant portion of its stock in trade, books, magazines and other periodicals, or video cassettes, which are distinguished or characterized by their emphasis on matter depicting, describing or relating to "Specified Sexual Activities" or "Specified Anatomical Areas" (as defined herein).

2. Adult Cabaret. A nightclub, bar, theater, restaurant or similar establishment which frequently features live performances by topless or bottomless dancers, go-go dancers, exotic dancers, strippers or similar entertainers, where such performances are distinguished or characterized by an emphasis on specified sexual activities or by exposure of specified anatomical areas or which regularly feature films, motion pictures, video cassettes, slides or other photographic reproductions which are distinguished or characterized by an emphasis upon the depiction or description of specified sexual activities or specified anatomical areas for observation by patrons. An adult cabaret does not include theaters, performing arts centers, civic centers and dinner theaters where live dance, ballet, music and dramatic performances of serious artistic merit are offered on a regular basis and in which the predominant business or attraction is not the offering to customers of entertainment which is intended to provide sexual stimulation or sexual gratification to such customers and where the establishment is not distinguished by an emphasis on, or the advertising or promotion of, employees engaging in nude erotic dancing.

3. Agricultural Uses. The growing of crops and raising of domestic animals but not including commercial dairies, commercial dog kennels, commercial hatcheries, commercial feeding of animals, and commercial mink, fox and other fur-bearing animal farms.

4. Agricultural Uses, Commercial. Includes commercial dairies, commercial kennels, and commercial hatcheries but not including commercial feeding of animals and commercial mink, fox and other fur bearing animal farms.

5. Alley. Any legally established public right-of-way less than 30 feet in width, but more than 10 feet in width, and affording only a secondary means of access to abutting property.

5m. Antenna. Any structure or device used for the purpose of collecting or radiating electromagnetic waves, including but not limited to directional antennas, such as panels, microwave dishes and satellite dishes, and omni-directional antennas, such as whips.

6. Arcade. A center for entertainment purposes composed of electronic pinball machines and other electric games. Alcoholic beverages or food service account for less than fifty percent of the total gross revenue.

7. Basement. That portion of a building which lies wholly or partially below grade where the vertical distance from grade to the ceiling above it is less than the vertical distance from grade to the floor immediately below.

8. Bed and Breakfast House. A dwelling in which less than ten guest rooms are provided for occupancy for compensation by transient guests.

9. Block. That property abutting on one side of a street and lying between the nearest intersecting or intercepting streets or nearest intersecting or intercepting street and railroad right-of-way, waterway or other barrier to or gap in the continuity of development along such street.

10. Board. The zoning board of appeals created under chapter 18.55.

11. Building. A structure having a roof supported by columns or walls.

12. Building, Accessory. A subordinate building the use of which is incidental to that of the main building on the same lot.

13. Building Height. The vertical distance from the grade to that point midway between the top plate and the peak or for mansard roof or gambrel roof as illustrated below. For accessory buildings, the height shall be measured to the highest point of the building.

(Drawing)

14. Building, Main. A building in which is conducted the principal use of the lot on which it is situated (includes attached garage).

15. Campground. Land or premises used or occupied, for compensation, by campers traveling by automobile or otherwise, or occupied by trailers or movable dwellings, rooms or sleeping quarters of any kind.

16. Car Wash. A building, or portion thereof, where automobiles or other motor vehicles are automatically or manually washed regularly as a business.

16m. Catering Business. An establishment engaged in the preparation of food for off-premise consumption at a banquet or similar event.

17. Central Business District. An area as defined in the Eau Claire Central Business District Plan, adopted by Council on May 26, 1982, which is incorporated herein by reference. A copy thereof is on file with the department and open to public inspection during normal business hours. The central business district contains the highest concentration of commercial and office activities.

18. Clinic. A facility for the reception and treatment of persons with a physical or mental disability, injured, or otherwise in need of physical or mental diagnosis, treatment, care or similar service.

19. Commercial Recreation Use. Includes archery ranges, bowling alleys, dance halls, arcades, golf driving ranges, miniature golf courses, pool halls, swimming pools, skating rinks, indoor theaters and other similar amusement facilities not considered major event entertainment.

20. Commission. The City of Eau Claire Plan Commission.

21. Common Open Space. All land which is intended and reserved for the common use and enjoyment of the residents of a development.

22. Comprehensive Plan. The plan elements adopted by the commission and certified by the council pursuant to Wis. Stats. 62.23(3).

23. Conditional Use. Any building, structure, and use which, on and after the effective date of this title complies with the applicable regulations and standards governing conditional uses of the zoning district in which such building, structure, and use is located and for which a permit is granted under Chapter 18.35.

24. Council. The City of Eau Claire City Council.

25. Day Care Center. Any licensed facility where a person, other than a relative or guardian, provides, for compensation or consideration, care and supervision for more than 8 children under seven years of age, for less than 24 hours a day.

26. Day Care Center, Adolescent. Any facility where any person, other than a relative or guardian, provides for compensation or consideration, care and supervision for more than three persons who are 7 years of age to 18 years of age, for less than 24 hours a day.

27. Day Care Centers, Adult. Any facility where a person, other than a relative or guardian, provides for compensation or consideration or both, care and supervision for three or more adults 18 years of age and older, who require such care and supervision due to age, disability or other infirmity, for less than 24 hours a day.

28. Day Care Home, Family. A dwelling licensed as a day care center by the department of health and social services under section 48.65, Wisconsin Statutes, where care is provided for not more than 8 children.

29. Department. The City of Eau Claire Department of Community Development.

30. Developable Land. Land which is not restricted by regulations or natural limitations (such as floodplains, steep slopes, high ground water, or other factors) from being developed.

31. Development or Develop. Includes the construction of any new building or other structures on a lot, the relocation of any existing buildings on another lot, or the use of a tract of land for any new use. To develop is to create a development.

32. Director. The Director of the Department of Community Development.

33. Dwelling, Multiple. A building containing three or more dwelling units.

34. Dwelling, One-Family. A detached building containing one dwelling unit and meeting the applicable standards of section 18.20.220 B. herein.

35. Dwelling, Two-Family. A building containing two dwelling units.

36. Dwelling Unit. A room or a group of rooms including cooking accommodations, occupied by one family, and in which not more than two persons, other than members of the family, are lodged or boarded for compensation at any one time.

37. Essential Services. The erection, construction, alteration or maintenance by public utilities or by governmental departments or commissions of such underground or overhead gas, electrical, steam, or water transmission or distribution systems and structures, collection, communication, supply or disposal systems and structures, including towers, poles, wires, mains, drains, sewers, pipes, conduits, cables, fire alarm boxes, police call boxes, streetlights, traffic signals, hydrants and other similar equipment, and accessories in connection therewith, but not including public utility facilities, communication structures or buildings as are reasonably necessary for the furnishing of adequate service by such public utilities or governmental departments or commissions or as are required for protection of the public health, safety or general welfare.

38. Family. One or more persons, who are related to each other by blood, marriage, adoption or legal guardianship, occupying a dwelling unit.

39. Garage, Private. An accessory building or portion of a main building (but not to exceed 4 parking stalls) on the same lot and used for the storage only of private passenger motor vehicles.

40. Garage, Public. A building or portion of a building, other than a private garage or a repair garage, used for the storage of motor vehicles, or where any such vehicles are kept for remuneration or hire, in which any sale of gasoline, oil and accessories is only incidental to the principal use.

41. Garage, Repair. A building or space for the repair or maintenance of motor vehicles, but not including factory assembly of such vehicles, auto wrecking establishments or junkyards.

42. Grade. The average elevation of the finished ground at the exterior walls of the main building.

43. Guestroom. A room occupied by one or more guests for compensation and in which no provision is made for cooking, but not including rooms in a dormitory used primarily for sleeping purposes.

44. Home Occupation. Any occupation customarily conducted for gain or support entirely within a dwelling or accessory building by a member or members of a family while residing in said dwelling, and which is clearly incidental and secondary to the residential use of the premises and does not change the character thereof.

45. Hospital. An institution for the reception and treatment of persons with a physical or mental disability, sick or injured, and having in-patient facilities. It may also be an institutional sanctuary for the reception of the aged, or for the a person with an intellectual or psychiatric disability or mental illness.. Permitted accessory uses shall include medical and psychiatric clinics, doctors' offices, sale of medical and surgical specialties and supplies, crutches, artificial members and appliances, training in the use of artificial members and appliances, patient and out-patient services, alcoholic centers, pharmacies, those hospital related uses instituted and carried on as shared services pursuant to appropriate agreements with other health care providers, and similar uses; provided, however, that any such accessory use is so related to the principal use as to be in fact an integral part of the total purpose and is incorporated within the same building or building complex; and provided further, that the floor area occupied by all accessory uses does not exceed one-third of the total floor area. Hospital related x-ray and laboratory facilities shall not be considered accessory uses in computation of area occupancy.

46. Junkyard. Any area used for the storage, keeping or abandonment of junk, including scrap metals or other scrap materials or goods, or used for the dismantling, demolition or abandonment of automobiles or other vehicles or machinery, or parts thereof.

47. Lodging House. A dwelling wherein lodging or meals for three persons, not members of the principal family therein, is provided for compensation.

48. Lot. The entire parcel of land occupied or to be occupied by a main building and its accessory buildings, or by a group of buildings, including the yards and open spaces required therefore by this title and other applicable law.

49. Lot, Corner. A lot abutting on two intercepting or intersecting streets where the interior angle of intersection or interception does not exceed one hundred thirty-five degrees.

50. Lot Depth. The average depth from the front line of the lot to the rear line of the lot.

51. Lot, Flag. A lot which has a minimum of 25 feet of frontage on a street, which is reached via a private drive or lane through the "pole" portion of the lot and whose dimensional standards some distance back from the street right-of-way meets all the standards of this title. Example of a flag lot:

(Drawing)

52. Lot, Front. The lot line separating the lot from the principal street on which it fronts.

53. Lot, Interior. A lot other than a corner lot.

54. Lot, Through. A lot having its front and rear lines on different streets, or having its front or rear line on a street and the other line on a river, lake, creek or other permanent body of water.

55. Lot Width. The width of a lot, measured at a distance back from the front line equal to the required minimum front yard setback.

(Drawing)

56. Manufactured Homes. A structure or structures certified and labeled as a manufactured home under 42. U.S.C. secs. 5401 to 5406, built since June 15, 1976, that bears a seal indicating it has met the mobile home construction and safety standards of the United States Department of Housing and Urban Development (HUD standards), is used as a permanent dwelling, and meets the criteria established in section 18.20.220 of this title.

57. Mobile Home. A unit designed to be towed or transported and used as a residential dwelling, but does not include a unit used primarily for camping, touring, or recreational purposes.

58. Mobile Home Park. Means any tract of land containing 2 or more sites. "Sites" means any plot of land which is rental or offered for rental for the accommodations of a mobile home used for residential purposes. It does not include a plot of land rented for the accommodation of a mobile home which is: 1) occupied on a strictly seasonal basis; or 2) owned by the operator and occupied as a residence.

59. Mobile Home Stand. That part of a parcel of land (mobile home site) in a mobile home park which has been reserved for the placement of one mobile home unit and shall include all attachments and additions to such mobile home.

60. Model Home. A single-family residential dwelling which is temporarily used for the purpose of sale and demonstration of the dwelling, or similar dwellings, and may include office space in connection therewith.

61. Motel. A building or portion thereof in which ten or more guestrooms are provided for occupancy for compensation by transient guests. Transient extended-stay guests are permitted for up to 180 days provided that any rooms so used are maintained by the motel owner or operator to applicable health and safety standards. Provisions for cooking may be allowed, provided such cooking devices are provided by the motel owner or operator and are maintained in accordance with health, fire, and safety codes.

62. Nonconforming Lot. A lot of record which was lawfully created prior to January 1, 1981, and does not conform to the lot area or dimensional standards for the district in which it is located.

63. Nonconforming Structure. A structure which conforms to this title with respect to use but not with respect to the design and dimensional standards or other minimum facilities requirements for the district in which it is located.

64. Nonconforming Use. Any use of a building, structure, land or water which was lawfully used, occupied or erected at the time of the effective date of this title, or amendments thereto, which does not conform to the regulations of this title or amendments thereto.

65. Outdoor Recreational Premises. Includes clubs and grounds for hunting, swimming, tennis, boating, horse riding, skiing and other sports. Accessory clubhouses, maintenance buildings and buildings for shelter and keeping of horses shall be located not less than 200 feet from any lot in a residential district.

66. PD Perimeter. An area of land lying immediately within the perimeter of a PD where lot sizes, housing types, setbacks, lot dimensions and building heights must be substantially similar to existing or planned land uses which are immediately outside the PD. The existence and exact location of the PD perimeter shall be determined by the council.

66m. Personal Wireless Communication Services. Licensed commercial wireless communication services, including cellular, personal communication services (PCS), enhanced specialized mobilized radio (ESMR), paging and similar services

67. Planned Development (PD). A land development project comprehensively planned as an entity through a unitary general development plan which permits flexibility in building siting, mixture of housing types and land uses, usable open spaces, and the preservation of significant natural features.

68. Project Density. The number of dwelling units per gross acre of developable land, including existing or planned dedicated rights-of-way.

69. Public Purposes. Includes roadways, rights-of-way, schools, bikeways, bus facilities, parks, libraries, fire stations or other public uses.

70. Public Utility. Any person, or municipal department or board duly authorized to furnish and furnishing under public regulation, to the public, electricity, gas, heat,
power, cable TV, steam, telephone, telegraph, transportation, water or sewerage services.

71. Public Utility Facilities. Includes electrical substations; microwave and radio relay structures and radio and television towers; railroad rights-of-way (not including railroad yards); telephone exchanges and transmission equipment buildings; privately owned sewerage system lift stations, water pumping stations, or water reservoirs; or other similar uses not considered essential services.

71m. Public Utility Tower. Any pole, spire, structure or combination thereof, including supporting lines, cables, wires, braces and masts, intended primarily for the purpose of mounting an antenna or similar apparatus above grade and used by any person, corporation or government supplying personal wireless communication or similar service to the general public.

72. Recycling Facilities. Includes the following four types of facilities:

a) Reverse Vending Machine - A mechanical device that accepts one or more types of empty beverage containers and issues a cash refund. There are two types of reverse vending machines: single-fed and bulk-fed. Single-fed machines resemble soda vending machines in size and appearance and will be considered accessory to commercial or industrial uses in administration of this title. Bulk reverse vending machines are larger and accept several containers at once. Because of their larger size, parking lot location, and noise; bulk vending machines will be treated as small collection facilities in this title.

b) Small Collection Facilities - These facilities are smaller than 300 square feet in size and are intended for collection only. Such facilities have room for limited day-to-day storage of material, and do not include power-driven processing equipment except as part of bulk reverse vending machines. These facilities are typically an accessory use on a site and will require approval of a certificate of zoning compliance.

c) Large Collection Facilities - Such facilities will typically involve buying or accepting material from the public, moving it to a shipping container and storing it until there is enough for a shipment. These facilities are larger than 300 square feet in size and most likely are the principle use of the building on site, rather than an accessory use. These facilities have capacity for aggregating and storing large amounts of materials on site in preparation for shipping to processing facilities.

d) Processing Facilities - A building or enclosed yard used for the collection and processing of recyclable materials. Processing means the preparation of materials for efficient shipment, or to an end-user's specifications, by such means as baling, briquetting, compacting, flattening, grinding, crushing, mechanical sorting, shredding, cleaning, or remanufacturing.

73. Roominghouse. Any dwelling or that part of any dwelling containing one or more rooming units, and/or one or more dormitory rooms. For the purpose of this code, "roominghouse" includes a dwelling unit occupied by more than four persons who are not legally related. "Rooming unit" means any room or group of rooms forming a single habitable unit used or intended to be used for living and sleeping, but not for cooking purposes. "Dormitory" means a room in any dwelling used for sleeping purposes by four or more unrelated persons.

74. Service Station. A retail station for the servicing of automobiles and other motor vehicles which includes the retail sale of gasoline, oil, grease and other automobile accessories, and, when accessory to the conduct thereof, the cleaning, lubricating and similar servicing of automobiles or other motor vehicles, but not including body repairs, spray painting or major mechanical repair, maintenance, or overhauling.

75. Solar Array. An accessory system or device that is roof-mounted or ground-mounted with poles or racks used to collect radiant energy directly from the sun for use in a solar collector's energy transformation process.

76. Solar Collector. A device, structure, or part of device, the substantial purpose of which is to transform solar energy into thermal, mechanical, chemical, or electrical energy.

77. Solar Farm. An array of multiple solar collectors on ground-mounted racks or poles that transmit solar energy and is the primary land use for the parcel on which it is located.

78. Specified Anatomical Areas. a) Less than completely and opaquely covered human genitals, pubic region, buttock and female breast below a point immediately above the top of the areola; b) human male genitals in a discernible turgid state even if completely and opaquely covered.

79. Specified Sexual Activities. a) Human genitals in a state of sexual stimulation or arousal; or b) acts of human masturbation, sexual intercourse or sodomy; or c) fondling or other erotic touching of human genitals, pubic region, buttock or female breast.

80. Story. That portion of a building included between the surface of a floor and the surface of a floor next above it, or if there is no floor above it, then the portion of the building between the surface of a floor and the ceiling or roof above it. A basement shall be counted as a story for the purposes of height regulations if the vertical distance from grade to the ceiling next above it is greater than distance from the grade to the basement floor.

81. Story, Half. The topmost story under a gable, hip or gambrel roof, the wall plates of which on at least two opposite exterior walls are not more than two feet above the floor of such story.

(Drawing)

82. Street. A public thoroughfare which affords the principal means of access to abutting property.

83. Structural Alteration. Any change, addition or modification in construction in the supporting members of a building, such as but not limited to, exterior walls, bearing walls, beams, columns, foundations, girders, floor joists, roof joists, rafters or trusses.

84. Structure. Anything constructed or erected having location on or under the ground or attached to something having location on or under the ground.

85. Tavern. Characteristics. An establishment that, as its principal business, sells alcoholic beverages for consumption on premises, although off-premise sales of sealed containers of alcohol may also occur at taverns with the appropriate license. While a tavern may serve food, it is distinguished from a restaurant in that its principal business is sale of alcohol as opposed to the preparation, service, or sale of food as indicated by such factors as: a majority of gross and net income from alcohol sales or service; closing hours are at or near statutory closing hours for licensed establishments under Wis. Stats. Chapter 125; predominant allocation of staffing and staff time to alcohol sales service, and security as compared to food preparation and service; prominent use of the premise for bars, bar seating, display of alcohol and its advertisement, and alcohol service; and the name, appearance, and advertising of the entity.

86. Transient Guest - Any person who shares a guest room in a non-permanent status for not more than 30 days.

87. Use. The purpose for which land or a building or structure thereon is designed, arranged, intended or maintained or for which it is or may be used or occupied.

88. Use, Accessory. A subordinate use on the same lot with the principal use and incidental and accessory thereto.

89. Wind Energy Conversion System. A machine or mechanism that converts the kinetic energy in the wind into a usable form of electrical or mechanical energy, such as but not limited to, a wind charger, wind turbine or windmill.

90. Yard. An open space, other than a court, on the same lot with a building. (See also definition for lot.)

91. Yard, Front. A yard extending across the full width of a lot and having a depth equal to the shortest distance between the front line of the lot and the nearest portion of the main building, including an enclosed or covered porch, provided that the front yard depth shall be measured from the future street line for a street on which a lot fronts, when such line is shown on the official map or is otherwise established.

92. Yard, Rear. A yard extending across the full width of a lot and having a depth equal to the shortest distance between the rear line of the lot and the main building.

93. Yard, Side. A yard between the side line of the lot and the main building extending from the front yard to the rear yard and having a width equal to the shortest distance between said side line and the main building.

94. Zoning District Overlay. That zoning classification attached to a given area of land which establishes requirements additional to or in place of those set forth in the underlying zoning district. Examples of overlay zoning districts include but are not limited to, the planned development overlay district, the highway overlay district, the floodplain district and shoreland-wetlands district.

95. Zoning District, Underlying. That zoning classification attached to a given area of land which establishes the permitted and conditional uses to which said land area can legally be put. Examples of underlying zoning districts include but are not limited to, the R-1, C-2, and I-1 districts. (Ord. 7350 §4, 2019; Ord. 7212 §1, 2016; Ord. 6950, 2011; Ord. 6754 §1, 2007; Ord. 6218, 2001; Ord. 6192, 2001; Ord. 5955 §1, 1999; Ord. 5872 §1, 1998; Ord. 5446 §1, 1994; Ord. 5280 §10, 1992; Ord. 5037, 1990).

Chapter 18.03

ZONING DISTRICTS AND MAPS

Sections:

18.03.010 Districts Established.
18.03.020 Zoning Districts Map.
18.03.030 Interpretations of District Boundaries.
18.03.040 Application of Regulations.
18.03.050 Scope of Provisions.
18.03.060 Interpretation and Conflict.
18.03.070 Severance Clause.
18.03.080 Vested Right.
18.03.090 Repeal.

18.03.010 Districts Established. For the purpose of this title, the city is hereby divided into the following zoning districts, which shall be known by the following respective symbols and names:

R-1A - Non-Sewered One-Family District
R-1 - One-Family District
R-2 - One- and Two-Family District
R-M - Mixed Residential District
R-3 - Low-Rise Multiple-Family District
R-4 - High-Rise Multiple-Family District
R-1B - Mobile Home Park District
C-1A - Office/Professional District
C-1 - Limited Neighborhood Shopping District
C-2 - Neighborhood Shopping District
C-3 - Community Shopping District
CBD - Central Business District
I-1 - Light Industrial District
I-2- Heavy Industrial District
P - Public Properties District
CV - Conservancy District
H - Highway Overlay District
PD - Planned Development Overlay District
F - Flood Plain Overlay District
W - Shoreland-Wetlands Overlay District (Ord. 5037, 1990).

18.03.020 Zoning Districts Map. The boundaries of the respective districts enumerated in section 18.03.010 are defined and established as depicted on the official zoning map for the City of Eau Claire. Such map, with all its notations and explanatory manner thereon, is adopted herein, and made an integral part of this title as if fully described herein. One copy of the official zoning map shall be maintained and kept up-to-date by the Department, accessible to the public and shall be the final authority as to the current zoning status of properties in the city. (Ord. 5037, 1990).

18.03.030 Interpretation of Districts Boundaries. For determination of the boundaries of the districts shown on the district map, the following rules shall apply:

A. Where such boundaries are indicated as following or approximately following street and alley lines, such street and alley lines shall be construed to be such boundaries. Areas within established lakes, waterways and canals are in P districts.

B. Where such boundaries are indicated as following or approximately following lot lines or property lines, such lot lines or property lines shall be construed to be such boundaries.

C. In unsubdivided property or where a district boundary divides a lot or parcel of property, the location of any such boundary, unless the same is indicated by dimensions shown on the district map, shall be determined by use of the scale appearing on such map.

D. The board shall, upon application or upon its own motion, determine the location of boundaries in cases where uncertainty exists.

E. Upon vacation of a street, each portion of such vacated street which attaches to adjoining land is herewith zoned the same as the land to which it attaches. (Ord. 5037, 1990).

18.03.040 Application of Regulations. The regulations herein established within each district shall be the minimum regulations for promoting and protecting the public health, safety and general welfare, and shall be uniform for each class of land or buildings and structures throughout each district. (Ord. 5037, 1990).

18.03.050 Scope of Provisions. A. Except as may otherwise be provided in this title, every building and structure erected, every use of any lot, building, or structure established, every structural alteration or relocation of an existing building or structure occurring, and every enlargement of, or addition to an existing use, building and structure occurring after the effective date of this title (April 16, 1990) shall be subject to all regulations of this title which are applicable to the district in which such use, building, or structure shall be located.

B. Uses are allowed by right only if specifically listed or determined as a permitted, accessory or conditional use in the various zoning districts. Where not specifically listed or determined as permitted, accessory or conditional uses, uses are thereby prohibited.

C. Accessory uses are permitted as indicated for the various zoning districts or if such uses are clearly incidental and customarily accessory to the permitted uses.

D. Conditional uses are recognized as possessing characteristics of such unique and special nature (relative to location, design, size, activity, etc.) as necessitating individual standards and conditions in order to safeguard the general health, safety, and welfare of the community and surrounding property.

E. No part of a setback area, or other open space, or off-street parking or loading space required about or in connection with any use, building or structure, for the purpose of complying with this title, shall be included as part of a setback area, open space, or off-street parking or loading space similarly required for any other use, building or structure.

F. No setback area or lot existing at the time of adoption of this title shall be reduced in dimensions or area below the minimum requirements set forth herein. Yards and lots created after the effective date of this title shall meet at least the minimum requirements established herein.

G. No portion of a lot, once established or improved with a building or structure shall be sold unless each lot resulting from each such reduction, division, or sale, shall conform with all requirements established herein. (Ord. 5037, 1990).

18.03.060 Interpretation and Conflict. A. In interpreting and applying the provisions of this title, they shall be held to the minimum requirements adopted for the promotion of the public health, safety, and general welfare. Unless specifically provided for, it is not intended by this title to repeal, abrogate, annul or in any way to impair or interfere with the existing and unrepealed provision of law or ordinance or any rules, regulations or permits previously adopted or issued pursuant to law relating to the use of building or land, provided, however, that where this title imposes a greater restriction upon the use of buildings or land than are imposed or required by such existing provisions of law or ordinance or by such rules, regulations or permits, the provisions of this title shall control. (Ord. 5037, 1990).

18.03.070 Severance Clause. A. If any court declares invalid the application of any provision of this title to a particular parcel, lot, use, building or structure, such ruling shall not affect the application of said provision to any other parcel, lot, use, building or structure not specifically included in said ruling. (Ord. 5037, 1990).

18.03.080 Vested Right. A. Nothing in this title shall be interpreted or construed to give rise to any permanent vested rights in the continuation of any particular use, district, zoning classification or any permissible activities therein; and they are hereby declared to be subject to subsequent amendment, change or modification as may be necessary to the preservation or protection of public health, safety, and welfare. (Ord. 5037, 1990),

18.03.090 Repeal. A. All ordinances and amendments heretofore enacted by the city, including Title 18, "Zoning" and chapter 16.16, "Sign Code", and all ordinances and parts of ordinances inconsistent with the provisions of this title are hereby repealed as of the effective date of this title (April 16, 1990).

B. The repeal of existing ordinances or parts of ordinances and their amendments does not affect or impair any act done, offense committed or right accrued or acquired, or liability, penalty, forfeiture or punishment incurred prior to the time it was enforced, prosecuted or inflicted. (Ord. 5037, 1990).

Chapter 18.04

RESIDENTIAL DISTRICTS

Sections:

18.04.010 Purpose.
18.04.020 Establishment of Districts.
18.04.030 Establishment of Uses.
18.04.040 Design and Dimensional Standards.

18.04.010 Purpose. This chapter is established in order to reserve adequate land for residential development and use; to encourage the development of a variety of housing types which meet the needs of present and future city residents; to ensure compatibility among various densities and features of development; and to encourage urban scale housing development where adequate public facilities and services can be provided; all in accordance with the comprehensive plan. (Ord. 5037, 1990).

18.04.020 Establishment of Districts. A. R-1A Non-Sewered One-Family District. The non-sewered one-family district is established in order to provide for very low urban density areas of one-family homes without public sewer service. The non-sewered one-family district is intended to be used only for those areas in which the provision of public sewer service is not readily available.

B. R-1 One-Family District. The one-family district is established in order to provide for the development and maintenance of one-family, detached homes in areas of moderately low urban density.

C. R-2 One- and Two-Family District. The one- and two-family district is established in order to provide for the development and maintenance of one-family homes and two-family homes, and to encourage land-efficient, energy-efficient, and affordable family housing.

D. RM Mixed Residential District. The mixed residential district is established to provide for the development and maintenance of a compatible mixture of small single-family homes, two-family homes, townhomes, garden apartments, and small apartment buildings; and to encourage moderately dense development which is compatible with existing and future single-family development, in either older neighborhoods or developing areas.

E. R-3 Low-Rise Multiple-Family District. The low-rise multiple-family district is established to provide for the development and maintenance of moderately dense multiple-family housing, in either older neighborhoods or developing areas. The density and height restrictions of the low-rise multiple-family district are intended to allow for the compatibility of these areas with adjacent lower density residential areas.

F. R-4 High-Rise Multiple-Family District. The high-rise multiple-family district is established to provide for the development and maintenance of high rise (3 or more floors), high density residential uses in a limited number of areas of the city. (Ord. 5037, 1990).

18.04.030 Establishment of Uses. A.

P Permitted Use: Any use with a P designation shall be considered a permitted use within the district under which it is listed in the table in subsection B, subject to all applicable requirements of this title.

A Accessory Use: Any use with an A designation shall be considered an accessory use within the district under which it is listed in the table in subsection B, subject to all applicable requirements of this title and the specific standards identified in 18.30.

C Conditional Use: Any use with a C designation shall be considered a conditional use within the district under which it is listed in the table in subsection B, subject to all applicable requirements of this title and the specific standards identified in 18.35.

-- Prohibited Use: Any use with a -- designation shall be considered a prohibited use within the district under which it is listed in the table in subsection B.

B. The following symbols shall have the meaning of the term indicated, as used in the following table:

P : Permitted Uses
A : Accessory Uses (See 18.30)
C : Conditional Uses (See 18.35)
--: Prohibited Use

		R-1A	R-1	R-2	R-M	R-3	R-4
1.	Accessory dwelling unit, detached	A	A	A	--	--	--
2.	Agricultural uses (see definition)	P	--	--	--	--	--
3.	Agricultural uses, commercial (see definition)	C	--	--	--	--	--
4.	Antennas or satellite dishes, private	A	A	A	A	A	A
5.	Antennas or satellite dishes, private (in excess of accessory use standards)	C	C	C	C	C	C
6.	Bed and breakfast house	C	C	C	C	C	C

7.	Cemeteries	C	C	C	C	C	C
8.	Christmas tree sales	C	C	C	C	C	C
9.	Churches, parish houses and convents	P	P	P	P	P	P
10.	Damaged Landmarked Properties	C	C	C	C	C	C
11.	Day care center	C	C	C	C	C	C
12.	Day care center, adolescent	C	C	C	C	C	C
13.	Day care center, adult	C	C	C	C	C	C
14.	Day care home, family	A	A	A	A	C	C
15.	Dwelling, conversion of one-family to duplex	--	--	C	P	P	P
16.	Dwelling, conversion of one-or two-family to 3-6 unit	--	--	C	P	P	P
17.	Dwelling, conversion of one-family to duplex on lots 6,000-8,000 square feet in size	--	--	C	P	P	P
18.	Dwellings, One-Family	P	P	P	P	C	C
19.	Dwellings, Two-Family	--	--	P	P	P	C
20.	Dwellings, 3-8 Unit	--	--	--	P	P	P
21.	Dwellings, 9+ Unit	--	--	--	C	P	P
22.	Essential services (see definition)	A	A	A	A	A	A
23.	Fences	A	A	A	A	A	A
24.	Fraternity or sorority house	--	--	--	C	C	C
25.	Garage, private (see Chapter 18.30)	A	A	A	A	A	A
26.	Garage, private (see Chapter 18.35)	C	C	C	C	C	C
27.	Golf courses	C	C	C	C	C	C
28.	Greenhouse, accessory	A	A	A	A	A	A
29.	Greenhouse, commercial	C	--	--	--	--	--
30.	Home occupations	C	C	C	C	C	C
31.	Horses	A	--	--	--	--	--
32.	Hospitals, sanitariums, nursing homes	--	--	--	--	--	C
33.	Lodging house (see chapter 18.20)	--	--	--	P	P	P
34.	Manufactured homes (see 18.20)	P	P	P	P	C	C
35.	Medical and dental clinics	--	--	--	--	--	C
36.	Model home	C	C	C	C	C	C
37.	Mortuaries	C	C	C	C	C	C
38.	Motels	--	--	--	--	--	C
39.	Museums, libraries	C	C	C	C	C	C
40.	Off-street parking facility, non-accessory	C	C	C	C	C	C
41.	Outdoor recreational premises (see definition)	C	C	C	C	C	C
42.	Outdoor storage areas, accessory to apartments	--	--	--	C	C	C
43.	Parks and playgrounds	P	P	P	P	P	P
44.	Pigeon Lofts	P*	P*	P*	C	C	C
45.	Professional offices	--	--	--	--	--	C
46.	Public utility facilities (see definition)	C	C	C	C	C	C
46m.	Public utility tower (see Chapter 18.35)	C	C	C	C	C	C
47.	Rooming house (see Chapter 18.20)	--	--	--	C	C	C**
48.	Schools, colleges and universities	C	C	C	C	C	C
49.	Signs (see Chapter 16.16)	A	A	A	A	A	A
50.	Solar Array	A	A	A	A	A	A
51.	Solar Farm	C	C	C	C	C	C
52.	Swimming pools, private	A	A	A	A	A	A
53.	Temporary construction buildings (see chapter 18.20)	A	A	A	A	A	A
54.	Temporary real estate office	A	A	A	A	A	A
55.	Wind energy conversion systems	C	C	C	C	C	C

*See section 18.35.050 O., requiring a conditional use permit under certain circumstances.
Any other use not specifically listed above shall be a prohibited use.
**See Section 18.20.180 for standards for conversion of one-family dwellings to Rooming Houses.
(Ord. 7212 §2, 2016; Ord. 7156 §1, 2015; Ord. 6929 §1, 2010; Ord. 5872 §2, 1998; Ord. 5454 §1, 1994; Ord. 5446 §2, 1994; Ord. 5207 §6, 1992; Ord. 5037, 1990).

18.04.040 Design and Dimensional Standards. A. The following lot, setback, lot coverage and building height requirements shall be the minimum required (except as otherwise stated) as contained in the following table for the district as indicated:

		R-1A	R-1	R-2	RM	R-3	R-4
1.	Lot area (sq. ft.)	25,000	8,000	6,000	6,000	6,000	6,000
2.	Lot area, two-family dwelling (sq. ft.)	n/a	n/a	10,000	8,000	6,000	6,000
3.	Lot area/3 or 4 family dwelling (sq. ft.)	n/a	n/a	n/a	10,000	8,000	6,000
4.	Lot area/additional dwelling unit over 4 (sq. ft.)	n/a	n/a	n/a	3,000	2,000	1,000
5.	Lot width* (ft.)	150	60	60	60	60	60
6.	Front yard setback* (ft.)	30	30	30	20	20	20
7.	Side yard setback* (ft.)	8[1]	8[1]	8[1]	8[1]	8[1]	8[1]
8.	Rear yard setback* (ft.)	25[2]	25[2]	25[2]	20	20	20
9.	Side street setback* (ft.) See Chapter 18.20						
10.	Max. lot coverage (%)*	15	30	30	35	35	35
11.	Max. "improved surface" lot coverage (%)	30	40	40	50	50	50
12.	Building height* (ft.)	35	35	35	35	45	120
13.	Building height, detached accessory structures* (ft.)	18	18	18	18	18	18

*For exceptions and modifications to these standards, see 18.20. For accessory building setbacks and other standards see 18.30.030.

[1]10' for buildings other than 1- or 2-family dwellings. For any building greater than 35' or 2 stories in height, add 1' to each side yard for every 4' above such height.

[2]50' for buildings other than those containing dwelling units. (Ord. 6685 §2, 2006; Ord. 5037, 1990).

Chapter 18.05

COMMERCIAL DISTRICTS

Sections:

18.05.010 Purpose.
18.05.020 Establishment of Districts.
18.05.030 Establishment of Uses.
18.05.040 Definition of General Uses.
18.05.050 Design and Dimensional Standards.
18.05.060 General Restrictions.

18.05.010 Purpose. This chapter is established in order to reserve adequate land for commercial development and use; to identify appropriate locations and uses for the various types of commercial districts within the city; to protect the health, safety and welfare of the public; and to implement the comprehensive plan. (Ord. 5037, 1990).

18.05.020 Establishment of Districts. A. C-1A Office/Professional District. The C-1A district is established to accommodate those office and professional uses which are specifically compatible to one another and often located separate from the convenience and variety retail uses. It is intended that the uses permitted in this district shall be located and designed so as to be in harmony with adjacent residential uses.

B. C-1 Limited Neighborhood Shopping District. The C-1 district is established to accommodate the shopping needs of residents living in adjacent residential areas. Within this district, which is located in close proximity to residential areas, are allowed those uses which are necessary to satisfy the daily or frequent shopping needs of the neighborhood consumer. Such uses include the retailing of convenience goods and the furnishing of certain personal services. Also permitted within this district are certain types of offices. Within this district, a limitation is imposed on the size of establishments to prevent the generation of large volumes of vehicular and pedestrian traffic.

C. C-2 Neighborhood Shopping District. The C-2 district is established to accommodate the shopping needs of neighborhood level service areas. Within this district, which is located in relative proximity to residential areas and to major thoroughfares, is permitted not only the retailing of convenience goods and the furnishing of certain personal services, but also the retailing of durable and fashion goods and the furnishing of other types of services. Also permitted are all types of office uses.

D. C-3 Community Commercial District. The C-3 district is established to accommodate those uses which are of city-wide and regional significance. Within this district are found the prime retailing and

specialized retailing activities, the cultural, recreational and educational activities of city-wide significance, the administrative offices of private organizations, and the offices of professional and nonprofessional persons offering a variety of specialized services. Within this district, development provides services on a community-wide or regional scale.

E. CBD Central Business District. The central business district is established to be a high intensity, pedestrian oriented, shopping, office, service, entertainment and residential area in the city. Diversity in the CBD is encouraged through the mix of uses and activities with development guided by the comprehensive plan. The requirements, herein, reflect the need for the highly compact intense development typical of downtowns while increasing the availability of open space, plazas, pedestrian ways, and the river amenity. (Ord. 5037, 1990).

18.05.030 Establishment of Uses. A.

P Permitted Use: Any use with a P designation shall be considered a permitted use within the district under which it is listed in the table in subsection B, subject to all applicable requirements of this title.

A Accessory Use: Any use with an A designation shall be considered an accessory use within the district under which it is listed in the table in subsection B, subject to all applicable requirements of this title and the specific standards identified in 18.30.

C Conditional Use: Any use with a C designation shall be considered a conditional use within the district under which it is listed in the table in subsection B, subject to all applicable requirements of this title and the specific standards identified in 18.35.

-- Prohibited Use: Any use with a -- designation shall be considered a prohibited use within the district under which it is listed in the table in subsection B.

B. The following symbols have the meaning of the term indicated, as used in the following table:

P : Permitted Uses
A : Accessory Uses (See 18.30)
C : Conditional Uses (See 18.35)
-- : Prohibited Use

		C-1A	C-1	C-2	C-3	CBD
General Uses (See 18.05.040)						
The following General Uses are allowed as shown unless listed as a specific use herein:						
1.	Institutional	--	P	P	P	P
2.	Office Activities	P	P	P	P	P
3.	Personal Services	--	P	P	P	P
4.	Retail Sales and Service	--	P	P	P	P
5.	Vehicle Services	--	--	C	P	P
Specific Uses						
6.	Adult Book Store or Adult Cabaret (provided provisions of chapter 18.20 are met)	--	--	--	P	P
7.	Arenas, Auditoriums, Convention Halls	--	--	--	P	P
8.	Automobile and Motorcycle Sales Lot	--	--	C	P	C
9.	Auto Body Shops	--	--	--	P	C
10.	Bus or Taxi Stations	--	--	--	P	C
11.	Car Wash	--	--	C	P	C
12.	Repealed by ord. no. 6683					
13.	Commercial Recreational Uses	--	C	C	P	P
14.	Day Care Center	--	C	C	C	C
15.	Day Care Center, Adolescent	--	C	C	C	C
16.	Day Care Center, Adult	--	C	C	C	C
17.	Dwelling Units, ground floor	C	C	C	--	C
18.	Dwelling Units, above the ground floor	C	C	C	--	P
19.	Essential Services	A	A	A	A	A
20.	Greenhouses	--	C	C	C	--
21.	Kennels	--	--	--	C	--
22.	Laundries, Commercial	--	--	--	C	C
23.	Linen, Towel or Other Commercial Supply Services	--	--	--	C	C
24.	Machinery and Equipment Sales and Service	--	--	--	C	--
25.	Mobile Home, Travel Trailers, or Recreational					

	Vehicle, Boat Sales or Service	--		--	--	C	--
26.	Mortuaries	C		P	P	P	C
27.	Motels	--		--	C	P	P
28.	Off-Street Parking Facility, Non-accessory	C		C	P	P	P
29.	Outdoor Theaters	--		--	--	C	--
30.	Public Utility Facilities	C		C	C	C	C
30m.	Public utility tower (see Chapter 18.35)	C		C	C	C	C
31.	Recycling Facilities						
	a) Reverse Vending Machine	A		A	A	A	A
	b) Small Collection Facility	--		--	P	P	P
	c) Large Collection Facility	--		--	--	C	--
	d) Processing Facility	--		--	--	--	--
32.	Retail Building Material or Lumber Yards	--		--	--	C	--
33.	Signs, Off-Premise (See 16.18)	--		--	--	C	--
34.	Signs, On-Premise (See 16.16)	A		A	A	A	A
35.	Solar Array		A	A	A	A	A
36.	Solar Farm		C	C	C	C	C
37.	Storage and Warehouse Facilities		--	--	--	P	C
38.	Tavern		--	--	C	P	C
39.	Truck Stop or Truck Yards		--	--	--	C	--
40.	Vehicle Rental or Storage		--	--	C	C	C
41.	Veterinary Clinic		--	--	C	C	C
42.	Wind Energy Conversion System		C	C	C	C	C
43.	Wholesale and Jobbing Businesses		--	--	--	P	C
44.	Processing of food related products (see Chapter 18.35)		--	--	--	C	C

Any other use not specifically listed above shall be a prohibited use, unless it is reasonably included under Section 18.05.040. (Ord. 7212 §3, 2016; Ord. 6683 §1, 2006; Ord. 5955 §2, 1999; Ord. 5872 §3, 1998; Ord. 5152 §1, 1991; Ord. 5057, 1990; Ord. 5037, 1990).

18.05.040 Definition of General Uses. The following definitions and descriptions shall be used by the zoning administrator and the board in determining whether a proposed use can be categorized as any of the general uses listed herein:

A. Institutional. "Institutional" includes religious institutions, all schools, hospitals, nursing homes, sanitariums or similar facilities.

B. Office Activities. 1. Characteristics. "Office activities" includes firms where activities are conducted in an office setting and generally focusing on business or personal services. If a service is being provided, the client need not be present for the activity to take place. If the office activity is part of a larger firm, it does not need to be on the same site as the primary activity. Most people coming to the site are employees.

2. Accessory Activities. Accessory uses of office activities may include cafeterias, health facilities or other amenities primarily for the use of employees in the firm or building.

3. Examples. Examples of office activities include professional services such as lawyers, accountants, engineers, or architects; financial businesses such as brokerage houses, lenders, or realtors; medical clinics and related offices; data processing; TV and radio studios; industrial or commercial company headquarters when not adjacent with other portions of the firm; and government offices.

4. Exceptions. Exceptions to office activities include the following: a) offices which are part of and accessory to a firm's industrial use are considered accessory to the firm's primary activity; and b) office activities which primarily offer on-site services to the general public and where the customer must be present are classified as personal service.

C. Personal Service. 1. Characteristics. Personal service establishments provide on-site personal services to the general public or business person. Persons generally spend some time on the site, in contrast to short drop-offs or pick-ups. This category includes office activities offering on-site services where the customer must be present.

2. Accessory Activities. Accessory uses to personal service establishments may include offices, product sales and laboratories.

3. Examples. Examples of personal services include barbers, hair salons and personal care services; banks, savings and loans and credit unions; libraries and museums; cafes, restaurants; laundromats; business and trade schools; dance and martial arts schools; health clubs, gyms, racquet centers, membership clubs and lodges; public service agencies such as employment offices, social service agencies and permit issuing offices.

D. Retail Sales and Service. 1. Characteristics. Retail sales and service firms are involved in the sale, lease or rent of new or used products or goods to the general public and/or provide on-site product repair or services for consumer and business goods. Goods are displayed and sold on-site, and use or consumption is primarily off-site. Goods are generally taken off-site by the customer at the time of sale or may be delivered by the firm. For items being serviced, customers generally deliver and pick up the items and spend little time at the site.

2. Accessory Activities. Accessory uses, retail sales, and service firms may include offices, storage of goods, limited assembly or repackaging of goods for on-site sale.

3. Examples. Examples of retail sales and service include stores selling apparel, housewares, furniture, hardware, auto parts, flowers, personal care items, bicycles, sporting goods, stationery supplies, office products and machines, and computers; food, produce or meat markets; bakeries, delicatessens and caterers; tool rental and household moving centers; repair of TV's, appliances, shoes, precision instruments, and business machines; laundry or dry cleaning drop-off; on-site launderers; photo drop-off; quick printing or reproducing; tailors; locksmiths; upholsterers; and furniture refinishing.

4. Exceptions. Exceptions to retail sales and service include the following: a) repair and service of consumer vehicles is classified in the vehicle service category. Repair of motor vehicles in conjunction with vehicle sales is classified in the vehicle service category.

b) repair and service of industrial vehicles and equipment is classified in the industrial service category.

E. Vehicle Services. 1. Characteristics. "Vehicle services" include firms servicing automobiles, light trucks (less than 18,000 pounds gross vehicle weight) and other consumer vehicles such as motorcycles, boats and recreational vehicles.

2. Examples. Examples of vehicle services may include service stations, vehicle maintenance, alignment shop, auto upholstery installers, tire sales and mounting, towing services, and surface or garage fee parking.

3. Accessory Activities. Accessory uses to vehicle services may include offices and sales of parts. (Ord. 5037, 1990).

18.05.050 Design and Dimensional Standards. A. Building Height Limit. 1. Buildings shall not exceed two and one-half stories, and shall not exceed 35 feet in height in the C-1A, C-1 and C-2 districts.

2. There shall be no height limit in the C-3 and CBD districts, provided that no building or portion of a building shall be erected to a height exceeding 40 feet on any portion of a lot less than 20 feet from any portion of a lot in any residential district.

B. Rear Yard Required. 1. No rear yard is required in the C-1A, C-1, C-2 and C-3 districts except:

a) a minimum 20 foot rear yard is required on any lot where the rear or side lot line is adjacent any residential district.

2. No rear yard is required in the CBD district.

C. Side Yards Required. 1. No side yards are required in the C-1A, C-1, C-2, and C-3 districts except:

a) a minimum side yard of 10 feet shall be provided where a side lot line is adjoining any alley right-of-way line or a side lot line in an adjacent residential district.

b) a minimum side yard of 20 feet or the setback from the street required for the abutting lot, whichever is greater, is required for a side yard abutting a street except as provided by other provisions of this title (see chapter 18.20).

2. No side yard is required in the CBD districts.

D. Front Yard Required. 1. A minimum front yard of 20 feet or the front yard setback required for the abutting lot, whichever is greater, is required in the C-1A, C-1, C-2 and C-3 districts except as provided by other provisions of this title (see chapter 18.20).

2. No front yard is required in the CBD districts except as provided by other provisions of this title (see chapter 18.20).

3. No part of a building wall which contains a vehicle entry door shall be within 20 feet of a street or alley except in a CBD district.

E. Lot Area, Width and Building Coverage Required. 1. No lot area, width or building coverage limit is required for any commercial district.

F. Off-Street Parking and Loading Requirements. 1. See chapter 18.25 for such requirements for all commercial districts. (Ord. 5037, 1990).

18.05.060 General Restrictions. The establishment of buildings and uses in each district listed herein shall include the following restrictions and minimum facilities around them:

1. In the C-1A district, off-street parking and loading spaces shall not be permitted in the front yard area when such districts are within 100 feet of a R-1A, R-1 or R-2 district.

2. In the C-1A district, the parking or storage of commercial trucks rated over 3/4 ton shall not be permitted upon any property located in such district, upon any right-of-way adjacent thereto, or upon any property adjacent thereto which is located in a residential district.

3. In the C-1 district, business establishments are restricted to a maximum gross floor area of five thousand square feet on the ground floor, exclusive of any floor area devoted to off-street parking or loading. All business establishments shall be retail or service establishments which deal directly with the customers. All goods produced on the premises shall be sold to consumers only on the premises where produced.

4. In the C-1, C-2 and C-3 districts, parking of trucks as an accessory use, when used in the conduct of a permitted use listed in these districts, shall be limited to vehicles of not over 1 1/2 ton capacity when located within 150 feet of a residential district.

5. In all commercial districts, all business, servicing or processing, except for off-street parking, off-street loading, display of merchandise such as garden, lawn and recreation supplies and equipment for sale to the public, shall be conducted within completely enclosed buildings, except as otherwise provided in this title. (Ord. 5037, 1990).

Chapter 18.06

INDUSTRIAL DISTRICTS

Sections:

18.06.010 Purpose.
18.06.020 Establishment of Districts.
18.06.030 Establishment of Uses.
18.06.040 Definition of General Uses.
18.06.050 Design and Dimensional Standards.
18.06.060 General Restrictions.

18.06.010 Purpose. This chapter is established in order to reserve adequate land for industrial development and use; to implement the comprehensive plan; to protect the health, safety and welfare of the public; to provide regulations for use and design for different industrial activities for each industrial district; and to provide regulations and standards for industrial uses in the city. (Ord. 5037, 1990).

18.06.020 Establishment of Districts. A. I-1 Light Industrial District. The I-1 district is established to accommodate those uses which are of a non-nuisance type located in relative proximity to residential and commercial areas, and to preserve and protect lands designated on the comprehensive plan for industrial development and use from the intrusion of certain incompatible uses which might impede the development and use of lands for industrial purpose. Development in the I-1 district is limited primarily to certain wholesale and jobbing commercial uses and certain industrial uses, such as the fabrication of materials, and specialized manufacturing and research institutions.

B. I-2 Heavy Industrial District. The I-2 district is established to accommodate most industrial uses and especially those heavy industrial uses which are incompatible to residential and commercial uses. The district allows for areas where intense industries may locate and not be in conflict with residential or commercial areas or more sensitive industrial uses. Industrial activities of all types are permitted, including those not desirable in other zones due to objectionable impacts or appearance. New office, business and retail uses are limited and new residential uses are not allowed. The site development regulations are limited to the minimum standards necessary to assure safe, functional, efficient and environmentally sound development. (Ord. 5037, 1990).

18.06.030 Establishment of Uses. A.

P Permitted Use: Any use with a P designation shall be considered a permitted use within the district under which it is listed in the table in subsection B, subject to all applicable requirements of this title.

A Accessory Use: Any use with an A designation shall be considered an accessory use within the district under which it is listed in the table in subsection B, subject to all applicable requirements of this title and the specific standards identified in 18.30.

C Conditional Use: Any use with a C designation shall be considered a conditional use within the district under which it is listed in the table in subsection B, subject to all applicable requirements of this title and the specific standards identified in 18.35.

-- Prohibited Use: Any use with a -- designation shall be considered a prohibited use within the district under which it is listed in the table in subsection B.

B. The following symbols shall have the meaning of the term indicated, as used in the following table:

P : Permitted Uses
A : Accessory Uses (See 18.30)
C : Conditional Uses (See 18.35)
-- : Prohibited Use

		I-1	I-2
General Uses			
The following General Uses are allowed as shown unless listed as a Specific Use herein:			
1.	Heavy Manufacturing and Production	--	C
2.	Industrial Services	P	P
3.	Industrial Products Sales	P	P
4.	Light Manufacturing and Production	P	P
5.	Major Event Entertainment	C	C
6.	Warehouse and Distribution	P	P
Specific Uses			
7.	Automobile Sales Lot	C	C
8.	Vehicle Services (see chapter 18.05)	C	C
9.	Concrete Products Casting	C	P
10.	Contractor's Storage Yards, Accessory	C	P
11.	Essential Services	A	A
12.	Feedmills	C	C
13.	Foundries and Machine Shops	C	P
14.	Greenhouses	P	P
15.	Indoor recreation uses (such as gymnastics, Dance schools, skating rinks, tennis courts, soccer, Fitness centers, and other similar uses).	C	C
16.	Impoundment and Vehicle Storage Yards	C	C
17.	Junkyards	C	C
18.	Meat Product Processing Plants	C	C
19.	Mobile Home and Recreational Vehicle Sales and Service	C	C
20.	Motor Freight Facilities	C	C
20m.	Municipal Park	C	C
21.	Off-Street Parking Facilities, Non-Accessory	P	P
22.	Paper Product Manufacturing	C	C
23.	Professional Offices	C	C
24.	Public Utility Facilities	C	C
24m.	Public Utility Tower	C	C
25.	Railroad Freight Facilities	C	C
26.	Recycling Facilities		
	a) Reverse Vending Machine	A	A
	b) Small Collection Facility	P	P
	c) Large Collection Facility	P	P
	d) Processing Facility	C	P
27.	Restaurants	C	C
28.	Signs (See Chapter 16.16)	A	A
29.	Signs, Off-Premise (See Chapter 16.18)	C	C
30.	Solar Array	A	A
31.	Solar Farm	C	C
32.	Taverns	C	C
33.	Tire Manufacture	C	C
34.	Veterinary Clinic and Kennels	C	C
35.	Wind Energy Conversion Systems	C	C

Any other use not specifically listed above shall be a prohibited use, unless it is reasonably included under section 18.06.040. (Ord. 7212 §4, 2016; Ord. 6993 2011; Ord. 6683 §2, 2006; Ord. 6184, 2001; Ord. 5872 §4, 1998; Ord. 5037, 1990).

18.06.040 Definition of General Uses. The following shall be used by the zoning administrator or the board in determining whether a proposed use can be categorized as any of the general uses listed herein:

A. Heavy Manufacturing and Production. 1. Characteristics. Heavy manufacturing and production firms are involved in the manufacturing, processing, fabrication, packaging, or assembly of goods that involves some external activity, including:

a) outside manufacturing or production;

b) major outside storage or activities in general;

c) that which contributes to negative external noise, smoke, odor, dust or other adverse impacts; or

d) that which contributes to negative external aesthetic problems due to storage, operations or vehicle parking or operations.

2. Examples. Heavy manufacturing and production may include: storage yards, gravel pits, batch plants, gasoline and oil storage, foundries, landfills, freight yards, recycling yards, pulp yards, slaughter houses, and other uses involving outdoor activities.

B. Industrial Products Sales. 1. Characteristics. Industrial products sales firms are involved in the sale, rent or lease of products generally intended for industrial or commercial users. Sales may be wholesale or retail. Emphasis is on on-site sales or order taking and may include display areas. Products may be delivered to the customer.

2. Accessory Activities. Accessory uses to industrial products sales may include office, product repair, warehouses, minor fabrication services, and repackaging of goods.

3. Examples. Industrial product sales activities may include: sale of machinery, equipment, trucks, special trade tools, welding supplies, machine parts, electrical supplies, janitorial supplies, restaurant equipment, office furniture and store fixtures. Industrial product sales also include industrial equipment and vehicle rentals.

4. Exceptions. Industrial products sales shall not include firms that are primarily engaged in retail sales to the general public.

C. Industrial Services. 1. Characteristics. Industrial service firms are engaged in the repair or servicing of industrial, business or consumer machinery, equipment, products or by-products. Firms that service consumer goods do so by mainly providing centralized services for separate retail outlets. Contractors, building maintenance services and similar activities perform services off-site. Few customers, especially the general public, come to the site.

2. Accessory Activities. Accessory uses to industrial services may include offices and retail drop-off centers.

3. Examples. Industrial service activities may include welding shops; machine shops; tool and appliance repair; electric motor repair; enameling and plating; truck and large equipment repair and storage; truck servicing; garbage and sanitary services (but not disposal); solid waste transfer stations; headquarters for building, heating, plumbing or electrical contractors; printing, publishing and blueprinting; exterminators; janitorial and building maintenance services; research, development and testing laboratories; trade schools; laundry, drycleaning and carpet cleaning plants; and photofinishing laboratories.

4. Exceptions. Industrial services shall not include outdoor services or activities for repair or salvage.

D. Light Manufacturing and Production. 1. Characteristics. Light manufacturing and production firms are involved in the manufacturing, processing, fabrication, packaging or assembly of goods. Raw, secondary or partially completed materials may be used. Products may be finished or semi-finished and are generally made for the wholesale market, for transfer to other plants, or to order for firms or consumers. Goods are generally not displayed or sold on-site, but if so, are a subordinate part of sales. Relatively few customers come to the manufacturing site.

2. Accessory Activities. Accessory uses to light manufacturing and production activities may include: offices, cafeterias, employee recreational facilities, warehouses, storage yards, repair facilities, truck fleets, retail outlets and caretaker's quarters.

3. Examples. Light manufacturing and production activities may include: processing of food-related products; weaving or production of textiles or apparel; woodworking, including cabinet makers; production of chemical, rubber, leather, clay, or glass materials or products; production or fabrication of metals or metal products; manufacture or assembly of machinery, equipment, vehicles, appliances, precision items and other electrical items; production of artwork and sign making.

4. Exceptions. Light manufacturing and production shall not include heavy manufacturing involving outdoor production, processing, or other activities that would be considered incompatible with light manufacturing and production.

E. Major Event Entertainment. 1. Characteristics. Major event entertainment firms are characterized by structures and activities that draw large numbers of people to specific events or shows, in contrast to general entertainment activities that draw people on a continuous basis.

2. Examples. Examples of major event entertainment include stadiums, sports arenas, coliseums, race tracks, auditoriums, exhibition and meeting areas, and drive-in theaters.

3. Exceptions. Exceptions to major event entertainment activities are as follows:

a) theaters and auditoriums with less than 300 seats are classified as commercial uses;

b) exhibition and meeting areas with less than 5,000 square feet of event area are classified as commercial uses.

F. Warehouse and Distribution. 1. Characteristics. Warehouse and distribution firms are involved in the movement, storage and/or sale of goods for themselves or other firms. Goods are generally delivered to other firms or the final consumer, except for some will-call pickups. The category includes wholesale sales which are not open to the general public and where on-site sales are low.

2. Accessory Activities. Accessory warehouse and distribution activities may include: offices, truck fleet parking and maintenance areas, repackaging of goods, and showrooms or display areas, but generally not for direct sale.

3. Examples. Warehouse and distribution firms may include: warehouses used by retail stores such as furniture and appliance stores; food and hardware distributors; household moving and general freight storage; distribution of industrial items such as steel products or machinery parts; building materials, plumbing and electrical distributors; truck terminals; parcel services; heating oil distributors; mail order houses; and mini-warehouses.

4. Exceptions. Warehouse and distribution shall not include firms that are primarily engaged in retail sales to the general public. (Ord. 5037, 1990).

18.06.050 Design and Dimensional Standards. A. Building Height Limit Required. 1. There is no building height limit in any industrial district, provided that no building or portion of a building shall be erected to a height exceeding 40 feet on any portion of a lot less than 20 feet from a residential district.

B. Side Yard Required. 1. No side yard is required in any industrial district, except:

a) that a minimum side yard of 10 feet shall be provided where a side lot line is adjacent to a residential district;

b) a minimum side yard of 20 feet or the setback from the street required for the abutting lot, whichever is greater, is required for a side yard abutting a street for new structures constructed after the effective date of this title except as provided by other provisions of this title (see chapter 18.20).

C. Rear Yard Required. 1. No rear yard is required in any industrial district, except that a minimum rear yard of 20 feet shall be provided where a rear lot line is adjacent to a residential district.

D. Front Yard Required. 1. No front yard is required in any industrial district, except:

a) as specifically provided in other sections of this title (see chapter 18.20);

b) a minimum front yard of 20 feet or the setback from the street required for the abutting lot, whichever is greater, is required for new structures constructed after the effective date of this title;

c) no part of a building wall which contains a vehicle entry door may be closer than 20 feet to a street or alley.

E. Lot Widths, Lot Area and Lot Coverage Required. 1. There is no lot width, lot area or lot coverage required in any industrial district, except as specifically provided in other sections of this title.

F. Off-Street Parking and Loading Required. 1. See Chapter 18.25 for such requirements. (Ord. 5037, 1990).

18.06.060 General Restrictions. A. In all industrial districts, all storage except for motor vehicles in operable condition, shall be within completely enclosed buildings or effectively screened with screening between 6 and 8 feet in height. No storage within 50 feet of such screening shall exceed the maximum height of such screening. (Ord. 5037, 1990).

Chapter 18.07

P-PUBLIC PROPERTIES DISTRICT

Sections:

18.07.010 Purpose.
18.07.020 Uses Permitted.
18.07.030 Procedure.
18.07.040 General Provision.

18.07.010 Purpose. A. The public properties district is established to allow for public use of certain areas, such as parks, playgrounds, schools, governmental uses, or other public areas. Development shall be limited to those projects which meet the regulations of this district and which also shall be in accord with, and promote, the purposes set forth in the comprehensive plan.

B. These districts may include such water areas as are publicly owned, controlled and regulated and such land areas as are owned, controlled, regulated, used or proposed to be used by the city or other public body. (Ord. 5037, 1990).

18.07.020 Uses Permitted. The following uses shall be permitted:

A. Municipal uses, city owned and operated;

B. Public parks, playgrounds;

C. Public utility and public service uses;

D. Noncommercial parking;

E. Boat landings and boat docks for public use;

F. Signs for municipal and public utility use;

G. Public schools, athletic fields and golf courses, and related educational or recreational facilities;

H. Other public buildings, lands, grounds, and uses, including public housing facilities. (Ord. 5037, 1990).

18.07.030 Procedure. A. Zoning. The procedure for zoning to or amending a public properties district shall be the same as required for any other zoning district, including the required fee. In addition to the requirements of Section 18.65.030, a site plan shall also be required prior to any physical change, as defined in subsection C, or change in use of such property.

B. Site Plan The procedure for site plan approval for property that is already zoned public properties district shall be the same as required for any other site plan, including the required fee, except that in addition to the requirements of Chapter 18.45, the following shall also apply:

1. The application shall be scheduled for a public hearing before the commission and the council with a Class 1 notice provided. Notice shall be provided to all property owners within 175' of the site as determined by the department.

2. The commission shall review and make recommendation to the council within 60 days from hearing the request.

3. The council will have final authority on the site plan to approve, deny, or approve with conditions.

4. An application shall be made for any physical change to a property.

C. Physical Change. In this Chapter, "physical change" means any new construction of a building or structure, external alteration of an existing building or structure, or modification of any property located within a public properties district, including the removal or alteration of trees or other vegetation which, in the case of property owned by the state, requires an environmental impact statement to be filed pursuant to the provisions of Wisconsin Statutes, section 1.11, or which, in the case of property owned by any other entity, significantly affects the quality of the human environment in the judgment of the commission. However, projects necessary to maintain or repair buildings and grounds that will not require exterior physical design or use changes or accessory structures considered incidental to a principal use on the property will be permitted without a site plan.

D. Approval of the Site Plan. Approval of the site plan shall establish the basic right of use for the area in conformity with such plan as approved, which shall be established as an integral component of the district regulations. (Ord. 7022, 2012; Ord. 5037, 1990).

18.07.040 General Provisions. A. The commission shall consider the proposed public properties use from a point of view as to achieve a maximum of coordination between the proposed use and the surrounding uses, the conservation of woodland and the protection of watercourses from erosion, siltation and pollution, and a maximum of safety, convenience and amenity for the residents of the area. To these ends the commission and the council shall consider the location of buildings, parking areas and other features with respect to the topography of the area and existing features such as streams and large trees; the efficiency, adequacy and safety of the proposed layout of streets and driveways; the adequacy and location of green areas required, the adequacy, location, and screening of required parking areas; if the project can be planned and developed to harmonize with any existing or proposed development in the area surrounding the project site, and such other matters as the commission and council may find to have a material bearing upon the stated standards and objectives of the public properties district and regulations.

B. Lot Area, Lot Width, Side Yard, Rear Yard, Front Yard, Lot Coverage and Building Height Requirements. In the public properties district, the requirements for lot area, lot width, side yard, rear yard, front yard, lot coverage and building height shall be consistent with basic planning and zoning principals and designed to encourage and promote improved environmental design. Such requirements as are made a part

of an approved site plan in accordance with the standards provided herein, shall be construed to be and enforced in accordance with this section.

C. Character and Intensity of Land Use. In a public properties district, the uses proposed, and their intensity and arrangement on the site, shall be of an aesthetic and operational character which:

1. Would be compatible with the physical nature of the site with particular concern for preservation of natural features, tree growth and open space;

2. Would produce an attractive environment of sustained aesthetic and environmental desirability; and

3. Would not create a traffic or parking demand incompatible with the existing or proposed facilities to serve it.

D. Standards for Streets and Utilities. The width of street right-of-way, width and location of street or other paving, outdoor lighting, location of sewer and water lines, provisions for storm water drainage or other similar consideration shall be adequate to serve their purposes and the standards and objectives of the public properties district. In no case shall such standards be less than those necessary to insure the public safety and welfare as determined by this code of ordinances.

E. Screening Requirements. When property for non-residential uses or structures in a public properties district abuts residential property or a residentially zoned district, appropriate screening may be required to form an opaque screen which visually separates the different uses.

F. Off-Street Parking. In the public properties district, off-street parking facilities shall be provided in accordance with applicable regulations of Section 18.25.

G. For public utility towers as defined herein, the provisions of section 18.35.050 V. shall apply. Notice shall be provided as per s. 18.35.020 C. (Ord. 5872 §5, 1998; Ord. 5037, 1990).

Chapter 18.08

CV -- CONSERVANCY DISTRICT

Sections:

18.08.010 Purpose.
18.08.020 Uses Permitted.
18.08.030 Conditional Uses.

18.08.010 Purpose. The Conservancy District is established to preserve and perpetuate certain areas in their existing or natural state. Such areas include, but are not limited to, lakes and waterways, wetlands and marshes, flood plains and stream beds, slopes, parks and woodlands, and other areas of aesthetic value, which because of their unique physical features, are deemed desirable and functional as natural drainageways and water retention areas, natural habitat for plant and animal life, greenbelts and other multiple purpose uses beneficial to the community. In addition, the Conservancy District is established to control building sites, placement of structures and land uses, and to protect the community from inappropriate development which may be unsuitable in certain areas due to slope, water table or other hazards. It is intended that the Conservancy District and the regulations established therein shall be in accord with and promote the purposes set forth in the Comprehensive Plan. (Ord. 5037, 1990).

18.08.020 Uses Permitted. The following uses shall be permitted:

A. Private lawns and open space;

B. Noncommercial gardens;

C. Public boat landings and publicly-owned boat rental facilities;

D. Public and private swimming beaches;

E. Public and private areas for passive recreation, scenic overlooks, hiking, bicycling, cross country skiing and similar noncommercial activities harmonious to the purpose of the Conservancy District;

F. Conservation uses including drainage control, forestry, wildlife sanctuaries, and facilities for making the same available and useful to the public;

G. Nature preserves, nature study areas and arboretums. (Ord. 5037, 1990).

18.08.030 Conditional Uses. The following conditional uses may be allowed in the conservancy district subject to the general provisions of chapter 18.35 and the finding that the conditional use would exist and be maintained in a manner which is determined to be compatible with the purpose of the conservancy district and the approval of a site plan under chapter 18.45 which clearly depicts the proposed use and general design of the area involved:

A. Public parks and playgrounds, exclusive of intense recreational facilities such as, but not limited to, amusement parks, coliseums, arenas, and stadiums;

B. Cemeteries;
C. Public utility and public service uses;
D. Signs for municipal and public utility uses;
E. Private boat landings, boat rental facilities, marinas, piers, docks and boathouses;
F. Filling, drainage, or dredging of wetlands. For the purpose of this section, "wetland" means an area where water is at, near, or above the land surface long enough to be capable of supporting aquatic or hydrophytic vegetation and which has soils indicative of wet conditions.
G. Stormwater facility. (Ord. 7239, 2017; Ord. 5037, 1990).

Chapter 18.09

H -- HIGHWAY OVERLAY DISTRICT

Sections:

18.09.010 Purpose.
18.09.020 Uses Generally.
18.09.030 Design and Dimensional Standards.
18.09.040 Setback Requirements for Buildings and Structures.

18.09.010 Purpose. A. For the purpose of providing space for adequate traffic circulation, suitable egress and ingress, parking area, and in the interest of public safety and convenience, the highway overlay district is established to regulate specific locations of uses along controlled-access highways.
B. Before a parcel of land which abuts a controlled-access highway is zoned as an H district, the council shall determine whether or not the public safety and welfare requires the present or future establishment of a public service street along such highway. In making such determination, the council shall employ the official map amendment procedure under chapter 18.60 and if it is found that a public service street is required, the same shall be placed on the official map. (Ord. 5037, 1990).

18.09.020 Uses Generally. A. Any permitted, accessory, or conditional use allowed in the underlying zoning district shall be allowed in the H district.
B. Any prohibited use in the underlying zoning district shall not be allowed in the H district.
C. Any general restriction or provision applicable in the underlying zoning district shall apply in the H district unless specifically stated differently in this chapter. (Ord. 5037, 1990).

18.09.030 Design and Dimensional Standards. A. Building height, lot area, lot width, and lot coverage shall be the same as the underlying zoning district for all uses in the H district.
B. Automobile parking regulations shall be the same as the underlying zoning district and the provision of chapter 18.25 for all uses in the H district. (Ord. 5037, 1990).

18.09.040 Setback Requirements for Buildings and Structures. A. Front yard, side yard, and rear yard setbacks shall be the same as the underlying zoning district for all buildings and structures in the H district, except as provided herein.
B. When a front yard, side yard, or rear yard of a property in the H district abuts an alley or a public street other than a controlled-access highway or a public service street between the property and such highway, a setback of 30 feet shall be required for any building or structure, except as otherwise provided herein.
C. When a front yard, side yard, or rear yard of a property in the H district abuts any controlled-access highway or any public service street between the property and such highway, a setback of 70 feet shall be required for any building or structure, except as otherwise provided herein.
D. The following exceptions are applicable to the 70 foot setback provisions:
1. In a case where a public service street at a street intersection, curves away from a controlled-access highway in order to give better access to the controlled-access highway, the building line established by the normal setback shall continue on to the street intersection; provided, however, that the setback is at no point less than 30 feet;
2. The board may reduce this distance to not less than 55 feet for a building not fronting such public service street or controlled-access highway, upon finding that a greater distance would not be needed and that the reduction would not violate the intent and purpose of this chapter. In such case, the board may also reduce the required setback to not less than 35 feet from any curve in a public service street where such street curves toward such building to give a better access to the controlled-access highway at an intersection of the controlled-access highway and the service road;

3. The board may reduce the required setback in cases where, because of an irregular and unique width of the public right-of-way in front of the premises, the setbacks herein prescribed would create an unnecessary hardship and the lesser setback would not violate the intent and purpose of this Chapter;

4. The board may reduce the required setback for a building to be erected when there are existing buildings within 100 feet on both sides of its proposed location, both having setbacks less than that required. In such case the board may establish the setback for the building to be erected to be more than the greater setback of the two existing buildings, except that the setback shall not be less than 55 feet;

5. The board may reduce the setback distance required for on-premise signs if the established setback for existing signs is less than required by this chapter.

E. Required setback distance shall be measured from the future street line where such line is established by being shown on the official map, or otherwise.

F. Fences, retaining walls, vegetation, directional or informational signs, or other restrictions intended and necessary for vehicular or pedestrian circulation, or parking, within the setback area, may be permitted upon the approval of the zoning administrator. In acting upon such exceptions, the zoning administrator shall, before approval, find either that such circulation or parking is intended and is necessary for public convenience or to serve the purpose of this regulation, or that the exception will not restrict other circulation or parking. (Ord. 5037, 1990).

Chapter 18.10

PD - PLANNED DEVELOPMENT

Sections:

18.10.010 Purpose.
18.10.020 General Provisions.
18.10.030 Procedure.
18.10.040 Review Criteria.
18.10.050 Standards and Special Requirements for a Residential Planned Development.
18.10.060 Standards and Special Requirements for a Commercial and Industrial Planned Development.

18.10.010 Purpose. A planned development is a permit process established for the following purposes:

A. Provide for concurrent processing and combining of permits to simplify and shorten the development review process;

B. Provide for the orderly and functional arrangement of land uses and buildings;

C. Permit flexibility in site design and variety in development;

D. Encourage well-planned neighborhoods through creative and imaginative planning;

E. Provide savings in infrastructure installation costs and energy use through the clustering of dwellings;

F. Create more functional active and passive open space areas within new development;

G. Achieve beneficial land use relationships with nearby areas;

H. Encourage development to be compatible with environmentally sensitive areas;

I. Preserve areas of natural or manmade scenic beauty and protect sites of historical or other commonly held values. (Ord. 5037, 1990).

18.10.020 General Provisions. A. The planned development (PD) shall be applied as an overlay zoning district. When applied to a specific geographic area, the PD shall have the effect of allowing development to be designed, reviewed, approved, constructed and managed according to the provisions of this chapter, rather than as required by the underlying zoning district. However, the underlying zoning district shall prevail in determining permitted and conditional uses of land within the PD as well as the maximum permitted project density or intensity of land use, except as otherwise provided herein.

B. When the planned development has been applied to a specific geographic area, the zoning classification or classifications of the land included within the PD shall thereafter signify this by the addition of a "P" to said zoning classifications, such as "R-1P", "C-2P", or "I-1P".

C. The planned development process shall be required for the following development applications:

1. Any development where variations in lot sizes, dimensional standards, clustering or principal buildings on one lot, provisions for common open space, or other design considerations which are not normally allowed under standard zoning districts and subdivision provisions are desired.

2. Any commercial, industrial, two-family dwelling or multi-family residential development involving the major subdivision of land as defined in title 17 of the municipal code.

3. Any commercial, industrial, two-family or multi-family development greater than 2 acres involving the zoning or rezoning of property to a commercial, industrial, two-family dwelling or multi-family residential district.

4. Any commercial, industrial, two-family dwelling or multi-family residential development involving a shopping center, an industrial park, an office park, a business park, clustered two-family dwellings or multiple family dwellings or other unified development themes.

Exceptions to these provisions which require approval through the PD process may be allowed by the city council if it is found that requiring such review will not serve to meet the purpose of this chapter. An example of such an exception would be applications involving only a single step review process.

D. Planned developments which require the subdivision of land may also have applications for each processed concurrently. A general development plan may serve as a preliminary plat if concurrent processing is desired. In no instance shall the platting requirements for subdivisions, as set forth in state law and title 17 of the municipal code, be waived as a result of this concurrent processing provision.

1. It is the intent of this provision that if plat review is required under title 17 of the municipal code, that it be accomplished simultaneously with the review of the general development plan under this chapter.

2. If simultaneous review is desired, the general development plan shall be submitted in a form that is in accordance with the requirements of title 17 of the municipal code relative to preliminary plats, where applicable.

E. An application for a planned development may be accompanied by all other discretionary requests, such as rezoning and conditional uses which may relate to the proposal.

1. Authority is given to the director to combine separate permit applications into one application for the convenience of the applicant as well as the City of Eau Claire. Planned development applications, conditional use permits and rezonings may be merged into one PD application for processing and consideration under the PD process. The standards set forth in this chapter shall be used to evaluate the merits of the combined permits. If the combining of permits is accepted by the director, the fees for rezoning and conditional use permits shall be waived and fees for only the PD application are required.

2. The commission may recommend and the council may deny any part of the combined request if they find it does not comply with the standards of this chapter.

F. Dedication, or offers to dedicate, interest in real property for specific public purposes shall be shown on the general development plan. Such dedications may be made a condition of approval of a planned development if the council finds that:

1. Such additional facilities would serve the public interest in such location;

2. Such facilities would be in accord with the comprehensive plan or component thereof; and

3. The amount and location of land to be dedicated bears a reasonable relationship to the demand generated by the proposed development.

G. Improvements, consistent with city standards or as shown on the comprehensive plan or component thereof, may be required as a condition of approval of a planned development. Improvements may include, but are not limited to, paving, curbs, gutters, sidewalks, bikeways, water lines, sewer lines, drainage works, bus turnouts, street lights and landscaping. Improvement requirements for multi-phased projects shall be applied to each final implementation plan as finalized and shall not consider future phases. (Ord. 6461, 2003; Ord. 5832 §1, 1998; Ord. 5037, 1990).

18.10.030 Procedure. An application for a planned development shall be initiated by the filing for a planned development permit. Said application shall be submitted to the department on forms provided for this purpose, and shall be accompanied by all information requested on said application. A planned development shall be processed in three stages: A) pre-application conference; B) general development plan; and C) final implementation plan as follows:

A. Pre-application Conference. The purpose of the preapplication conference is to provide two-way communication between the prospective developer and the city staff regarding the legal, planning and engineering aspects of the potential development. Accordingly, prospective developers shall submit sketches and other pertinent information to the department for review and discussion by other city departments prior to submittal of a general development plan. Sketches shall include the entire area of the intended PD, even if the PD is to be developed in phases.

A pre-application conference review shall consider: success in achieving the purposes of the PD ordinances; adequacy of public and private services and facilities; ability to conform with all applicable codes and ordinances; utilization of commonly accepted principles of good site planning; and consistency with the comprehensive plan.

Submittal requirements for the general development plan will be reviewed as part of the pre-application conference. A submittal item may be waived as part of this review if determined to be not needed, already known or needed at a future stage.

The prospective developer shall be provided with a written copy of the comments and waived submittal items made at such meeting. Applicants shall be advised to take these comments into account in preparation of more detailed plans for the PD.

B. General Development Plan. Upon completion of the pre- application conference, an application may be filed for a general development plan. The purpose of the general development plan is to establish the framework for future development of the PD in terms of timing, overall building layout and site design, land uses, density or intensity of development, traffic circulation/access, off-street parking, storm drainage, general utility locations, active and passive open space, location and management of common areas, general landscaping treatment and similar development components.

The general development plan shall include the entire area of the intended PD, even if the PD is to be developed in stages. All subsequent final implementation plans for such area shall be in conformance with the approved general development plan. The general development plan may be amended using the same procedure for the initial general development plan approval.

Submittal requirements for a general development plan shall include all items indicated upon the submittal list which can be obtained from the department.

Upon receipt of all the required submittal items for the general development plan, and an application for a PD, the director shall coordinate with other departments of the city the review of the plan and formulate a recommendation to the commission. At such time, the city clerk shall give notice and set up public hearings before the commission and council.

The commission shall review the proposed general development plan in accordance with the review criteria set forth in this chapter. It shall also consider the recommendation of the department and other comments received. The commission shall then make its recommendation to the council for approval, approval with conditions, or denial.

Final action on the general development plan lies with the council.

Approval by the council of a general development plan shall constitute an amendment to the zoning ordinance establishing the appropriate PD district, and that district shall be noted on the official zoning map. If, after approval of the general development plan, any portion or phase of the PD development schedule established under this section is not met, the director may initiate appropriate action to rezone the property which has not been developed in accordance with such development schedule to an appropriate zoning district or districts compatible with the surrounding area, as determined by the Commission.

C. Final Implementation Plan. Following approval of a general development plan, a final implementation plan for all or a portion of the PD shall be submitted to the department for review and approval. In the case of a single phase PD, the applicant may combine the general development plan and final implementation plan stages of the review process into a single final implementation plan, in which case review and approval of such plan shall occur using the procedure set forth in subsection B. The purpose of the final implementation plan is to finalize the detailed planning, engineering, design, ownership, management, maintenance and timing aspects of the development. For this reason it is anticipated that a final implementation plan will normally be prepared only for those portions of a PD which are expected to be developed in the immediate future.

The final implementation plan shall be in substantial conformance with the approved general development plan. If the director finds that a proposed final implementation plan substantially differs from the approved general development plan, or that such change gives reason to notify and obtain input from affected residents and property owners, the director shall require the applicant to submit a proposed amendment to the general development plan as set forth in this chapter. Examples of modifications to a PD which shall first require an amendment to the general development plan include changes in the general layout and design of the PD, the area encompassed by the PD, the overall density of dwelling units is increased by more than 5%, the major categories of land use, the mix, magnitude and intensity of residential or non-residential types of land uses, the parking and traffic circulation system, and major features of the common open space areas.

No building permits shall be issued for construction within the PD without first obtaining approval of a final implementation plan for that portion of the PD. All grading, construction, landscaping and other activities associated with land development shall be carried out in strict conformance with the approved final implementation plan.

The list of items required to be submitted with a final implementation plan may be obtained from the department.

Upon receipt of all the required items for the final implementation plan, the director shall coordinate its review with other city departments for the purpose of reviewing the final implementation plan for compliance with the approved general development plan. If the proposed final implementation plan is found to meet these criteria, it shall be approved by the department and development may then commence accordingly. Such department may approve with conditions or require submittal of a modified final implementation plan if it does not comply with such criteria. Decisions of the department with respect to a final implementation plan may be appealed within thirty (30) days to the commission which shall have final jurisdiction in the case of appeals. (Ord. 5037, 1990).

18.10.040 Review Criteria. A. General Development Plan. In reviewing the general development plan, the following criteria shall be used:

1. Conformance with the applicable provisions of the underlying zoning district;

2. Conformance with the provisions of this chapter and the review criteria of the site plan chapter of this title;

3. Suitability of the site itself for development as proposed;

4. Compatibility of the proposed development with adjacent and nearby existing or planned development in terms of scale, mass, height, bulk, uses, activities, traffic, design, structure placement, privacy, views and similar concerns;

5. Utilization of site planning principles common to high quality development;

6. Conformance with city development and design standards and policies;

7. Availability, both on and off the site, of adequate public utilities and services, including water, sanitary sewer, storm sewer or other means of surface drainage, streets, sidewalks, traffic control, fire protection and police protection;

8. Effective mitigation of any potential negative impacts of the proposed development either on the site itself or off the site;

9. Adequate provision for preservation and maintenance of areas set aside for common ownership;

10. Conformance with the comprehensive plan.

The commission, in making its recommendation to the council, shall consider said criteria as noted above and also take into consideration the recommendations of the department and the commission and comments received at its public hearing.

B. Final Implementation Plan. In reviewing a final implementation plan, the department or the commission, as appropriate, shall consider the following criteria:

1. Strict conformance of the final implementation plan to the adopted general development plan, particularly in terms of the general layout and design of the PD; the overall density of dwelling units; the number and type of dwelling units; the major categories of land use; the mix, magnitude and intensity of non-residential types of land uses; the parking and traffic circulation system; and major features of the open space area.

2. The review criteria set forth in subsection 18.10.040.

C. Amendments to General Development Plan. Amendments to the general development plan involving what are considered by the director or the commission to be substantial changes shall require the same procedure for review and approval as the original general development plan. Amendments involving what are considered by the director or the commission to be minor and of no substantial negative impact upon adjacent properties, the neighborhood or existing dwelling units within the PD may be approved by the department without public hearing and notice. The criteria stated in this chapter under subsection 18.10.030 B. shall be considered in determining substantial changes.

D. Amendments to Final Implementation Plans. Amendments to final implementation plans shall be approved by the department if such amendments conform to the approved general development plan. Amendments which do not conform to the general development plan shall require an amendment to the plan as prescribed above.

E. Recording; Conditions Run With the Land. 1. Before a general development plan becomes effective, a document shall be recorded by the applicant within 30 days of approval in the office of the register of deeds for the county within which the PD is located. Said document shall identify the property as being part of a PD which is on file in the department. Applicant shall furnish evidence of such recording to the director prior to any final implementation approval for multiple phased projects or within 15 days of final implementation approval for single phased projects.

2. Any conditions attached to a general development plan or final implementation plan shall run with the land and shall not lapse or be waived as the result of any subsequent change in the tenancy or ownership of any or all of said lands. Such conditions shall be deemed to be part of the building permit issued for any use or structure within the PD.

F. Fees. 1. Fees for final implementation plan approval shall be the same as those established for site plans.

2. Fees for a PD (general development plan approval) shall be the same as those established for zoning amendments. (Ord. 5037, 1990).

18.10.050 Standards and Special Requirements for a Residential Planned Development. The following provisions shall be applied by the commission and council in their consideration of a residential PD.

A. Permitted Uses. Only those uses which are permitted in the underlying zoning district or districts shall be permitted in a PD, unless provided for herein. However, housing types may vary and residential uses may be at higher densities within portions of the residential PD, pursuant to subsection C below.

B. Conditional Uses. Those uses which are conditional uses in the underlying zoning district or districts shall be allowed in a PD only if a conditional use permit is granted by the Commission. Conditional use permits may be reviewed concurrently with general development plans.

C. Density and Housing Type. 1. The maximum number of dwelling units per acre (project density) for the PD as a whole shall be based upon the acreage of developable land as follows:

Zoning District	Project Density
R-1A	2 units per acre of developable land
R-1	5 units per acre of developable land
R-2	8 units per acre of developable land
R-M	14 units per acre of developable land
R-3	21 units per acre of developable land
R-4	28 units per acre of developable land

Up to a 25 percent increase in said project density may be allowed upon a finding that:

a) Adequate public and private facilities and services are available, both on and off the site, to support the increased density or number of units, including but not limited to streets, parking, traffic control, water, sewer, drainage, fire and police protection, recreational facilities, and schools; and

b) The increased density or number of units would not have a substantial negative effect upon adjacent properties; and

c) The residential PD will be superior in design, function and appearance based upon the following criteria:

1. Orientation of the units on the site to achieve a high level of privacy of interior and exterior spaces;

2. Appropriateness of the scale and massing of structures;

3. Use of varied building elevations and staggered setbacks;

4. Effectiveness of landscaping, screening and buffering within the PD and along its perimeter;

5. Appropriateness of the type and level of improvements within the common open space areas given the characteristics of the residents of the PD;

6. Overall quality of design of the development, including streetscape, parking lots, open space, buildings, lighting, signs, pedestrian pathways, etc.;

7. Varied placement of buildings, demonstrating sensitivity to the natural topographic features of the site;

8. Retention of unique natural features of the site and incorporation of such features into the project's overall design;

9. Recreation areas that are provided are directly accessible to a majority of the dwellings and are well-designed for their intended purpose; and

10. Overall, the project exceeds the standards established in this chapter for design, function and appearance.

2. Lot sizes and housing types (e.g., single family detached, zero lot line, duplex, townhouse, low-rise, high-rise, etc.) may vary from those permitted in the underlying zoning district to the extent that all provisions of this ordinance are met and that the project density for the application as a whole is not exceeded.

3. Where such increases in density or changes in housing types do occur within a PD, extra measures shall be taken, such as increases in setback, open space, screening, buffering, etc., to assure compatibility with adjacent and nearby land uses, both existing and planned.

D. PD Perimeter. The PD perimeter shall be designed and used in such a way as to harmonize uses, scale, structure heights, setbacks and mass with existing or planned adjacent or nearby development. Reasonable provisions relating to lighting; landscaping; screening; buffering; activity areas; land uses; setbacks; structure height, width, length, orientation; or similar characteristics of the development may be imposed to assure this compatibility.

E. Lot Area, Lot Width, Setbacks. 1. Lot area, lot width and setback requirements for the PD may vary from the underlying zoning district, provided the developer has demonstrated that the proposed design and layout meets the provisions of this chapter. Lot areas, lot widths and setbacks within the PD perimeter shall be designed to be compatible to existing or planned land uses immediately outside the development.

2. Setbacks from public right-of-way shall be a minimum of 20 feet for local streets, 30 feet for collector streets and shall be increased accordingly for setbacks from major or minor arterial streets.

3. Perimeter setbacks from the edge of the PD shall be at least the same as is required by the adjacent zoning district.

F. Building and Structure Heights. Building and structure heights may exceed the maximum established by the underlying zoning district only upon the expressed request by the applicant and upon approval of such as part of the general development plan. Building and structure heights within the PD perimeter shall be no higher than allowed height in adjacent districts.

G. Environmental Design. Insofar as possible, a PD shall be designed to preserve existing vegetation, terrain, and other significant natural features. Reasonable provisions relating to the preservation of these features may be imposed to assure preservation of such features.

H. Common Open Space. 1. Since the PD concept of development is intended to provide more functional open space and to make more efficient use of land, utilities and other improvements, at least 15 percent of the total gross land area of the PD, exclusive of areas listed in paragraph 4 of this subsection, shall be permanently reserved as common open space. This provision may be waived by the city council when it is determined that other options for providing open space are available.

2. Common open space may be held in common, be privately owned, or dedicated to the public, or any combination thereof. Any land dedicated to the public must be officially accepted by the council before such dedication becomes valid. Land dedicated to the public may be considered part of the required common open space area for the PD.

3. Common open space areas shall be designed creatively, add to the overall appearance and aesthetic qualities of the PD, and be truly functional in providing for the open space and recreational needs of the residents of the PD.

4. The following areas shall not be included in calculating the minimum amount of common open space for the PD:

a) Areas within required front and side yard setbacks;

b) Open spaces less than 30 feet wide, unless approved as a common pathway system;

c) Existing or proposed street rights-of-way;

d) Parking areas and driveways;

e) Building sites, unless used for recreational purposes.

5. Up to 25 percent of the required common open space may consist of designated floodway, the surface area of water bodies and/or areas having slopes greater than 30 percent, only if the following findings are made:

a) Said areas are available by legal right for the use and enjoyment of the residents of the PD;

b) Said areas are functional in providing for the open space and outdoor recreation needs of the residents of the PD; and

c) Said areas are safely and conveniently accessible to the residents of the PD.

6. Common open space areas shall be functionally related and accessible to all properties within the PD in relation to the location of the dwelling units they are intended to serve.

7. An area of the common open space may be required for active recreational use commensurate with the anticipated need for such private recreational facilities by the intended future occupants of the dwelling units in the PD.

8. In the case of a PD being developed in phases, an appropriate proportion of the gross area of each phase of the PD (subject to final implementation plan approval) shall be reserved for common open space at all times, unless such requirement is waived by the city council.

9. At the time of final implementation plan approval, provision must be demonstrated for the ownership and perpetual care and maintenance of all common open space areas. Areas designated as common open space shall be permanently reserved as such, using appropriate legal instruments as approved by the city attorney, at the time of final implementation plan approval. Covenants or other legal arrangements shall specify ownership of the common open space, method of maintenance, responsibility for maintenance, maintenance taxes and insurance, compulsory membership and assessment provisions, guarantees that any entity formed to own and maintain the common open space will not be dissolved without the consent of the council, and any specifications deemed reasonably necessary by the council.

10. If the common open space contains buildings or other facilities which were approved as part of the general development plan, the developer shall provide legal arrangements or sureties as a part of the final implementation plan submittal, as approved by the city attorney, to assure that such improvements are completed.

I. Minimum Project Size. The minimum project size for a residential PD shall be 2 acres. This requirement may be waived by the council if the applicant can clearly demonstrate that the proposed PD can meet the purpose of this chapter.

J. Non-residential Uses. 1. Nonresidential development may exist within a residential PD only to the extent that it is compatible with existing and planned residential uses, both inside and outside the PD.

2. Nonresidential development shall be integrated into the total design of the project, shall primarily serve the residents of the planned development, shall complement surrounding residential development and blend into the total scheme, avoiding a harsh contrast to its surroundings, either in design or in its effects.

K. Building Spacing and Orientation. The minimum spacing allowed between buildings shall not be less than required by the applicable building codes. However, greater distances may be required, taking into

consideration the need for privacy, light and ventilation, fire and safety, traffic circulation, solar access and open space.

L. Building Architecture. Developers shall, where appropriate, incorporate architectural control provisions in the protective covenants for the PD in an effort to maintain long-term property values and the architectural integrity of the development.

M. Off-street Parking. Off-street parking spaces shall be provided as required by city ordinance.

N. Streets, Utilities and Drainage. 1. All publicly dedicated streets, utilities and all drainage facilities shall be designed in accordance with city code and policy.

2. Private streets shall only be allowed as approved on the general development plan.

O. Circulation/Access. 1. Vehicular access to individual lots adjoining an arterial street as defined under the functional street classification system of the city shall be by way of a frontage road, service road, or other local street. Local street access to arterial streets shall be minimized to whatever extent possible. Lot access to collector streets shall be minimized to whatever extent is possible.

2. Each PD shall be provided with at least two separate points of ingress and egress unless waived by the council. Principal vehicular access points to the project shall be designed to encourage smooth traffic flows with controlled turning movements and minimum hazards to vehicular and pedestrian traffic.

3. Internal streets, drives and parking surface areas shall provide safe and convenient access to dwelling units and recreational facilities, and for service and emergency vehicles. Streets shall not be designed to encourage outside traffic to traverse the PD on local streets, nor create unnecessary fragmentation of the PD into the smaller sub-areas.

P. Landscaping, Screening and Buffering. In order to protect the integrity of a PD, and when deemed necessary to provide protection to adjacent properties, landscaping, screening and buffering may be required as part of the general development plan. If so required, a screening and landscape plan shall be submitted to the department for approval in conjunction with final implementation plan approval for each phase of a PD. Landscape plans shall show the location, species of plant material, and the size of all plant materials. Screening plans shall include typical details of fences, berms and plant material to be used.

Q. Signs. Signs within a residential PD shall be in conformance with the city sign code.

R. Street Lighting. 1. Street lights shall be required as established in the city code.

2. Other forms of outdoor lighting may be required, as is reasonable for the safety of the intended uses of the development.

S. Sidewalks and Pathways. 1. Sidewalks and pathways for pedestrians and bicyclists shall be required as established in the city code.

2. Sidewalks and pathways shall form a logical, safe and convenient system for pedestrian access to all dwelling units, appropriate project facilities, and principal off-site pedestrian destinations. (Ord. 7212 §5; Ord. 5037, 1990).

18.10.060 Standards and Special Requirements for a Commercial and Industrial Planned Development.

A. Uses Permitted. Those areas which are set forth as permitted uses in the underlying zoning district may be considered permitted uses in the approved commercial or industrial PD.

B. Conditional Uses. Those uses which are set forth as conditional uses in the underlying zoning district may be authorized in the commercial or industrial PD only if a conditional use permit is granted by the Commission.

C. Mixed Use Planned Development. For large scale projects involving the reuse of older buildings or sites, the commission may allow uses within a planned development which are not allowed within the underlying zoning district, provided the commission finds them to be compatible and harmoniously incorporated into the unitary design of the planned development and consistent with the purpose of this chapter, as provided in s. 18.10.010. With the approval of a mixed use planned development, the commission shall also approve, as part of the general development plan for the property, a plan for the location of the general uses within the project.

D. Design and Dimensional Standards. The standards in the underlying zoning district regulating site coverage, building height, site area and setbacks shall be used as a guide in evaluating a commercial or industrial PD, but may be modified by the commission or council based on the standards of this chapter.

E. Parking Requirements. The minimum number of off-street parking spaces required for use within a commercial or industrial PD, and their design, shall be set forth in the automobile parking space regulations of this title, except as follows:

Multiple use parking facilities: Commercial or industrial PD's containing uses which have dissimilar peak traffic generation hours may have the total number of parking spaces required for each use reduced by not more than 40 percent where it is shown that the joint facility shall serve all existing, proposed, and potential uses as well as separate parking facilities for each use on the site. As a condition of approval of this joint use provision, reciprocal parking agreements between the parties involved shall be reviewed and approved by the city attorney and filed with the city.

F. Circulation. 1. Vehicular access to lots or parcels fronting on a principal arterial street shall be via a service or frontage road. Curb cuts shall not be allowed within 115 feet of the intersection of 2 principal arterial streets, 75 feet from the intersection of 2 minor arterial streets, and 50 feet from the intersection of 2 collector streets. When a combination of the above street classifications intersect, the more restrictive requirement shall apply. This requirement may be waived or modified by the council where it would constitute an unreasonable requirement and would not create a traffic hazard.

2. Each commercial or industrial PD shall be provided with adequate point(s) of ingress/egress. Principal vehicular access points shall be designed to encourage smooth traffic flows with controlled turning movements and minimum hazards to vehicular traffic. Merging lanes, acceleration lanes, deceleration lanes, turn-out lanes, and/or traffic dividers/medians shall be required where existing or anticipated heavy flows indicate need.

3. Interior circulation for commercial or industrial PD's, particularly within large parking areas, shall be designed and delineated so as to ensure a safe and efficient flow of vehicles and adequate consideration towards pedestrian movement. A pedestrian pathway system shall be provided such that a logical, safe and convenient method of reaching the project facilities from the parking areas is achieved with a minimum of conflict with vehicular traffic. Where vehicular traffic conflicts with walk ways, crossings shall be provided and designed to promote safety, be appropriately marked and otherwise safeguarded.

G. Lighting. The following guidelines are to be used when evaluating lighting plans:

1. The height of light poles shall not exceed 40 feet, but in no case shall said height exceed the maximum height of structures permitted in the base zone.

2. Lights should be located on standards pointing towards the structures or areas to be illuminated. Lighting shields shall be utilized as appropriate to keep glare on-site.

3. The lighting fixtures plan shall be designed so as to harmonize with the building design. The design and placement of lighting fixtures shall not have an adverse effect upon abutting properties.

H. Signs. Integrated sign themes, developed in a manner that will complement the proposed project, shall be instituted for each commercial or industrial PD. Said signs should include a central sign used to identify the complex or center, as well as wall-mounted signs, or similar treatment, used to identify each individual shop or activity. In developing and analyzing signs, consideration shall be given to the scale of the project, internal design considerations, and the character of the project as viewed from adjacent streets and properties. It is the intent of this section to provide for a visually attractive streetscape and to ensure that signs in a commercial or industrial PD are harmonious with the project and adjacent properties. In no cases shall the size of signs within a commercial or industrial PD exceed the criteria established for the base zone as set forth in the sign code.

I. Screening of External Activities. 1. All exterior storage areas, service yards, electrical transformers, storage tanks, refuse collection areas and other similar outdoor areas shall be screened from view if said uses can be seen from a public street or adjacent properties. Said uses shall be screened with opaque fencing or walls which harmonize with the building design of the development.

2. All roof-mounted mechanical equipment, vents and ductwork shall be concealed by the building mass, or shall be screened from public view in a manner that will harmonize with the building design. Solar collectors are exempt from this requirement. Mechanical equipment, vents, and ductwork which are not roof-mounted shall be concealed by the building mass or by walls or fences which are consistent with the design treatment of the building.

J. Landscaping. 1. Landscaping shall consist of an effective, harmonious and functional combination of trees, shrubs and various vegetative materials. Berms, accent boulders, decorative walls and other similar devices are also encouraged as a part of such landscape treatment.

2. Landscape areas shall be provided throughout the commercial and industrial PD to separate pedestrian walks along public rights-of-way or within parking areas from car rows, to shade parking areas, create attractive visual entrance points, define internal circulation patterns, conserve energy, soften the appearance of building walls, and buffer abutting land uses as necessary.

3. Wheel restraints shall be required around landscape areas where determined to be necessary for protecting landscaped areas from vehicular traffic or where determined to be necessary for directing drainage on site.

4. Open space areas containing natural features worthy of preservation may be left unimproved. Structures and improvements to be located in or adjacent to the open space shall conserve and enhance the amenities of the area and be designed to be compatible with the topography and natural features of the site.

K. Fences, Walls and/or Vegetative Screens. Fences, walls and/or vegetative screens shall be provided at the edges of a commercial or industrial PD where needed to protect adjacent property owners or residents from undesirable views, glare, noise or other on-site influences. Particular attention in this regard shall be given whenever a commercial or industrial PD abuts property zoned for or utilized as residential.

L. Streets, Sidewalks, Utilities, Street Lighting and Drainage. All streets, sidewalks, utilities, street lighting and drainage improvements shall be provided in accordance with city code and shall be shown on the approved final implementation plan. (Ord. 7212 §6; Ord. 5302, 1993; Ord. 5037, 1990).

Chapter 18.11

F -- FLOODPLAIN OVERLAY DISTRICT

Sections:

18.11.010 Statutory authorization.
18.11.020 Finding of fact.
18.11.030 Statement of purpose.
18.11.040 Title.
18.11.050 Definitions.
18.11.060 General provisions.
18.11.070 General standards applicable to all floodplain districts.
18.11.080 Floodway district (FW).
18.11.090 Standards for development in floodway areas.
18.11.100 Floodfringe district (FF).
18.11.110 Standards for development in floodfringe areas.
18.11.120 General floodplain district (GFP).
18.11.130 Nonconforming uses and structures.
18.11.140 Floodway areas--Nonconforming uses and structures.
18.11.150 Floodfringe areas--Nonconforming uses and structures.
18.11.160 Administration.
18.11.170 Administration procedures.
18.11.180 Plan commission.
18.11.190 Zoning board of appeals.
18.11.200 Review of appeals of permit denials.
18.11.210 Floodproofing.
18.11.220 Public information.
18.11.230 Amendments.
18.11.240 Enforcement and penalties.

18.11.010 Statutory authorization. This chapter is adopted pursuant to the authorization in s. 62.23, the requirements in s. 87.30, Wisconsin Statutes. (Ord. 7083, 2014; Ord. 6735, 2006).

18.11.020 Finding of fact. Uncontrolled development and use of the floodplains and rivers of this municipality would impair the public health, safety, convenience, general welfare, and tax base. (Ord. 6735, 2006).

18.11.030 Statement of purpose. This chapter is intended to regulate floodplain development to:

A. Protect life, health, and property;
B. Minimize expenditures of public funds for flood control projects;
C. Minimize rescue and relief efforts undertaken at the expense of the taxpayers;
D. Minimize business interruptions and other economic disruptions;
E. Minimize damage to public facilities in the floodplain;
F. Minimize the occurrence of future flood blight areas in the floodplain;
G. Discourage the victimization of unwary land and homebuyers;
H. Prevent increases in flood heights that could increase flood damage and result in conflicts between property owners; and
I. Discourage development in a floodplain if there is any practicable alternative to locate the activity, use or structure outside of the floodplain. (Ord. 6735, 2006).

18.11.040 Title. This chapter shall be known as the Floodplain Zoning Ordinance for Eau Claire, Wisconsin. (Ord. 6735, 2006).

18.11.050 Definitions. Unless specifically defined, words and phrases in this chapter shall have their common law meaning and shall be applied in accordance with their common usage. Words used in the present tense include the future, the singular number includes the plural, and the plural number includes the singular. The word “may” is permissive; “shall” is mandatory and is not discretionary.

A. “A Zones” mean those areas shown on the official floodplain zoning map which would be inundated by the regional flood. These areas may be numbered or unnumbered A Zones. The A Zones may or may not be reflective of flood profiles, depending on the availability of data for a given area.

B. AH Zone – Flood depths of 1 to 3 feet usually in areas of ponding. See “Area of Shallow Flooding.”

C. AO Zone – Flood depths of 1 to 3 feet usually sheet flow on sloping terrain. See “Area of Shallow Flooding.”

D. “Accessory structure or use” means a facility, structure, building, or use that is accessory or incidental to the principal use of a property, structure or building.

E. “Alteration” – An enhancement, upgrading, or substantial change or modifications other than an addition or repair to a dwelling or to electrical, plumbing, heating, ventilating, air conditioning, and other systems within a structure.

F. “Area of Shallow Flooding” – A designated AO, AH, AR/AO, AR/AH, or VO zone on a community’s Flood Insurance Rate Map (FIRM) with a 1 percent or greater annual chance of flooding to an average depth of 1 to 3 feet where a clearly defined channel does not exist, where the path of flooding is unpredictable, and where velocity flood may be evident. Such flooding is characterized by ponding or sheet flow.

G. “Base flood” means the flood having a one percent chance of being equaled or exceeded in any given year, as published by FEMA as part of a flood insurance study and depicted on a federal flood insurance rate map.

H. “Basement” means any enclosed area of a building having its floor sub-grade, i.e., below ground level, on all sides.

I. “Building” see “Structure”.

J. “Bulkhead line” means a geographic line along a reach of navigable water that has been adopted by a municipal ordinance and approved by the Department pursuant to s. 30.11, Wis. Stats., and which allows limited filling between this bulkhead line and the original ordinary high water mark, except where such filling is prohibited by the floodway provisions of this chapter.

K. “Campground” means any parcel of land which is designed, maintained, intended or used for the purpose of providing sites for nonpermanent overnight use by 4 or more camping units, or which is advertised or represented as a camping area.

L. “Camping unit” means any portable device, no more than 400 square feet in area, used as a temporary shelter, including, but not limited to a camping trailer, motor home, bus, van, pick-up truck, tent, or other mobile recreational vehicle.

M. “Certificate of compliance” means a certification that the construction and the use of land or a building, the elevation of fill, or the lowest floor of a structure is in compliance with all of the provisions of this chapter.

N. “Channel” means a natural or artificial watercourse with definite bed and banks to confine and conduct normal flow of water.

O. “Crawlway” or Crawl space” means an enclosed area below the first usable floor of a building, generally less than five feet in height, used for access to plumbing and electrical utilities.

P. “Deck” means an unenclosed exterior structure that has no roof or sides, but has a permeable floor that allows the infiltration of precipitation.

Q. “Department” means the Wisconsin Department of Natural Resources (DNR).

R. “Development” means any artificial change to improved or unimproved real estate, including, but not limited to the construction of buildings, structures, or accessory structures; the construction of additions or alterations to buildings, structures, or accessory structures; the repair of any damaged structure or the improvement or renovation of any structure, regardless of percentage of damage or improvement; the placement of buildings or structures; subdivision layout and site preparation; mining, dredging, filling, grading, paving, excavation, or drilling operations; the storage, deposition, or extraction of materials or equipment; and the installation, repair, or removal of public or private sewage disposal systems or water supply facilities.

S. “Dryland access” means a vehicular access route which is above the regional flood elevation and which connects land located in the floodplain to land outside the floodplain, such as a road with its surface above regional flood elevation and wide enough for wheeled rescue and relief vehicles.

T. “Encroachment” means any fill, structure, equipment, building, use, or development in the floodway.

U. “Federal Emergency Management Agency (FEMA)” means the federal agency or successor agency that administers the national flood insurance program.

V. “Flood insurance rate map” (FIRM) means a map of a community on which the federal insurance administration has delineated both the floodplain and the risk premium zones applicable to the community. This map may only be amended by FEMA.

W. “Flood or Flooding” means a general and temporary condition of partial or complete inundation of normally dry land areas caused by one of the following conditions:

1. The overflow or rise of inland waters;
2. The rapid accumulation or runoff of surface waters from any source; or
3. The sudden increase caused by an unusually high water level in a natural body of water, accompanied by a severe storm or by an unanticipated force of nature, such as a seiche, or by some similarly unusual event.

X. “Flood frequency” means the probability of a flood occurrence which is determined from statistical analyses. The frequency of a particular flood event is usually expressed as occurring, on average, once in a specified number of years or as a percent (%) chance of occurring in any given year.

Y. “Floodfringe” mans that portion of the floodplain outside of the floodway which is covered by flood waters during the regional flood and associated with standing water rather than flowing water.

Z. “Flood hazard boundary map” means a map designating approximate flood hazard areas. Flood hazard areas are designated as unnumbered A Zones and do not contain floodway lines or regional flood elevations. This map forms the basis for both the regulatory and insurance aspects of the national flood insurance program until superseded by a flood insurance study and a flood insurance rate map.

AA. “Flood insurance study” means a technical engineering examination, evaluation, and determination of the local flood hazard areas. It provides maps designating those areas affected by the regional flood and provides both flood insurance rate zones and base flood elevations and may provide floodway lines. The flood hazard areas are designated as numbered and unnumbered A Zones. Flood insurance rate maps that accompany the flood insurance study form the basis for both the regulatory and the insurance aspects of the national flood insurance program.

BB. “Floodplain” means land which has been or may be covered by flood water during the regional flood. It includes the floodway and the floodfringe, and may include other designated floodplain areas for regulatory purposes.

CC. “Floodplain island” means a natural geologic land formation within the floodplain that is surrounded, but not covered, by floodwater during the regional flood.

DD. “Floodplain management” means a policy and procedures to insure wise use of floodplains, including mapping and engineering, mitigation, education, and administration and enforcement of floodplain regulations.

EE. “Flood profile” means a graph or a longitudinal profile line showing the relationship of the water surface elevation of a flood event to locations of land surface elevations along a stream or river.

FF. “Floodproofing” means any combination of structural provisions, changes, or adjustments to properties and structures, water and sanitary facilities, and contents of buildings subject to flooding, for the purpose of reducing or eliminating flood damage.

GG. “Flood protection elevation” means an elevation of two feet of freeboard above the water surface profile elevation designated for the regional flood. (Also see: “Freeboard”.)

HH. “Flood storage” means those floodplain areas where storage of floodwaters has been taken into account during analysis in reducing the regional flood discharge.

II. “Floodway” means the channel of a river or stream and those portions of the floodplain adjoining the channel that are required to carry the regional flood discharge.

JJ. “Freeboard” means a safety factor expressed in terms of a specified number of feet above a calculated flood level. Freeboard compensates for any factors that cause flood heights greater than those calculated, including ice jams, debris accumulation, wave action, obstruction of bridge openings and floodways, the effects of watershed urbanization, loss of flood storage areas due to development, and aggregation of the river or stream bed.

KK. “Habitable structure” means any structure or portion thereof used or designed for human habitation.

LL. “Hearing notice” means publication or posting meeting the requirements of Ch. 985, Wis. Stats. For appeals, a class 1 notice, published once at least one week (7 days) before the hearing, is required. For all zoning ordinances and amendments, a class 2 notice, published twice, once each week consecutively, the last at least one week (7 days) before the hearing. Local ordinances or bylaws may require additional notice, exceeding these minimums.

MM. “High flood damage potential” means damage that could result from flooding that includes any danger to life or health or any significant economic loss to a structure or building and its contents.

NN. “Highest Adjacent Grade” – The highest natural elevation of the ground surface prior to construction next to the proposed walls of a structure.

OO. “Historic structure” means any structure that is either:

1. Listed individually in the national register of historic places or preliminarily determined by the secretary of the interior as meeting the requirements for individual listing on the national register;
2. Certified or preliminarily determined by the secretary of the interior as contributing to the historical significance of a registered historic district or a district preliminarily determined by the secretary to qualify as a registered historic district;
3. Individually listed on a state inventory of historic places in states with historic preservation programs which have been approved by the secretary of the interior; or

4. Individually listed on a local inventory of historic places in communities with historic preservation programs that have been certified either by an approved state program, as determined by the secretary of the interior or by the secretary of the interior in states without approved programs.

PP. "Increase in regional flood height" means a calculated upward rise in the regional flood elevation, greater than 0.00 foot, based on a comparison of existing conditions and proposed conditions which is directly attributable to development in the floodplain but not attributable to manipulation of mathematical variables such as roughness factors, expansion and contraction coefficients and discharge.

QQ. "Land use" means any nonstructural use made of unimproved or improved real estate. (Also see "Development".)

RR. "Lowest Adjacent Grade" – Elevation of the lowest ground surface that touches any of the exterior walls of a building.

SS. "Lowest Floor" – The lowest floor of the lowest enclosed area (including basement). An unfinished or flood resistant enclosure, usable solely for parking of vehicles, building access, or storage in an area other than a basement area is not considered a building's lowest floor; provided that such enclosure is not built so as to render the structure in violation of the applicable non-elevation design requirements of 44 CFR 60.3.

TT. "Maintenance" – The act or process of restoring to original soundness, including redecorating, refinishing, non-structural repairs, or the replacement of existing fixtures, systems, or equipment with equivalent fixtures, systems, or structures.

UU. "Manufactured home" means a structure transportable in one or more sections, which is built on a permanent chassis and is designed to be used with or without a permanent foundation when connected to required utilities. The term "manufactured home" includes a mobile home but does not include a "mobile recreational vehicle".

VV. "Mobile/Manufactured Home Park or Subdivision" – A parcel (or contiguous parcels) of land, divided into two or more manufactured home lots for rent or sale.

WW. "Mobile/Manufactured Home Park or Subdivision, Existing" – A parcel of land, divided into two or more manufactured home lots for rent or sale, on which the construction of facilities for servicing the lots is completed before the effective date of this ordinance. At a minimum, this would include the installation of utilities, the construction of streets, and either final site grading or the pouring of concrete pads.

XX. "Mobile/Manufactured Home Park, Expansion to Existing" – The preparation of additional sites by the construction of facilities for servicing the lots on which the manufactured homes are to be affixed. This includes installation of utilities, construction of streets, and either final grading or the pouring of concrete pads.

YY. "Mobile recreational vehicle" means a vehicle which is built on a single chassis, 400 square feet or less when measured at the largest horizontal projection, designed to be self-propelled, carried, or permanently towable by a licensed, light-duty vehicle, is licensed for highway use if registration is required, and is designed primarily not for use as a permanent dwelling, but as temporary living quarters for recreational, camping, travel or seasonal use. Manufactured homes that are towed or carried onto a parcel of land, but do not remain capable of being towed or carried, including park model homes, do not fall within the definition of "mobile recreational vehicles".

ZZ. "Model, Corrected Effective" – A hydraulic engineering model that corrects any errors that occur in the Duplicate Effective Model, adds any additional cross sections to the Duplicate Effective Model, or incorporates more detailed topographic information than that used in the current effective model.

AAA. "Model, Duplicate Effective" – A copy of the hydraulic analysis used in the effective FIS and referred to as the effective model.

BBB. "Model, Effective" – The hydraulic engineering model that was used to produce the current effective Flood Insurance Study.

CCC. "Model, Existing (Pre-project)" – A modification of the Duplicate Effective Model or Corrected Effective Model to reflect any man-made modifications that have occurred within the floodplain since the date of the effective model but prior to the construction of the project for which the revision is being requested. If no modification has occurred since the date of the effective model, then this model would be identical to the Corrected Effective Model or Duplicate Effective Model.

DDD. "Model, Revised (Post-project)" – A modification of the Existing or Pre-project Conditions Model, Duplicate Effective Model, or Corrected Effective Model to reflect revised or post-project conditions.

EEE. "Municipality" or "Municipal" means the county, city or village governmental units enacting, administering, and enforcing this zoning ordinance.

FFF. "NAVD", or "North American Vertical Datum" means elevations referenced to mean sea level datum, 1988 adjustment.

GGG. "NGVD", or "National Geodetic Vertical Datum" means elevations referenced to mean sea level datum, 1929 adjustment.

HHH. “New construction”, for floodplain management purposes, means structures for which the start of construction commenced on or after the effective date of floodplain zoning regulations adopted by this community and includes any subsequent improvements to such structures. For the purpose of determining flood insurance rates, it includes any structures for which the “start of construction” commenced on or after the effective date of an initial flood insurance rate map or after December 31, 1974, whichever is later, and includes any subsequent improvements to such structures.

III. “Nonconforming structure” means an existing lawful structure or building that is not in conformity with the dimensional or structural requirements of this chapter for the area of the floodplain which it occupies. (For example, an existing residential structure in the floodfringe district is a conforming use. However, if the lowest floor is lower than the flood protection elevation, the structure is nonconforming.)

JJJ. “Nonconforming use” means an existing lawful use or accessory use of a structure or building that is not in conformity with the provisions of this chapter for the area of the floodplain it occupies. (Such as a residence in the floodway.)

KKK. “Obstruction to flow” means any development that blocks the conveyance of floodwaters such that this development alone or together with any future development will cause an increase in regional flood height.

LLL. “Official floodplain zoning map” means that map, adopted and made part of this chapter, as described in s. 8.11.060 B., which has been approved by the Department and FEMA.

MMM. “Open space use” means those uses having a relatively low flood damage potential and not involving structures.

NNN. “Ordinary highwater mark” means the point on the bank or shore up to which the presence and action of surface water is so continuous as to leave a distinctive mark such as by erosion, destruction, or prevention of terrestrial vegetation, predominance of aquatic vegetation, or other easily recognized characteristic.

OOO. “Person” means an individual or group of individuals, corporation, partnership, association, municipality, or state agency.

PPP. “Private sewage system” means a sewage treatment and disposal system serving one structure with a septic tank and soil absorption field located on the same parcel as the structure. It also means an alternative sewage system approved by the department of commerce, including a substitute for the septic tank or soil absorption field, a holding tank, a system serving more than one structure, or a system located on a different parcel than the structure.

QQQ. “Public utilities” means those utilities using underground or overhead transmission lines such as electric, telephone and telegraph, and distribution and collection systems such as water, sanitary sewer, and storm sewer.

RRR. “Reasonably safe from flooding” means base flood waters will not inundate the land or damage structures to be removed from the floodplain, and that any subsurface waters related to the base flood will not damage existing or proposed buildings.

SSS. “Regional flood” means a flood determined to be representative of large floods known to have occurred in Wisconsin. A regional flood is a flood with a one percent chance of being equaled or exceeded in any given year and, if depicted on the flood insurance rate map, the regional flood elevation is equivalent to the base flood elevation.

TTT. “Start of construction” means the date the building permit was issued, provided the actual start of construction, repair, reconstruction, rehabilitation, addition, placement, or other improvement was within 180 days of the permit date. The actual start means either the first placement of permanent construction on a site, such as the pouring of slab or footings, the installation of piles, the construction of columns, or any work beyond initial excavation, or the placement of a manufactured home on a foundation. Permanent construction does not include land preparation such as clearing, grading, and filling, nor does it include the installation of streets and/or walkways, nor does it include excavation for a basement, footings, piers, or foundations, or the erection of temporary forms, nor does it include the installation on the property of accessory buildings such as garages or sheds not occupied as dwelling units or not part of the main structure. For an alteration, the actual start of construction means the first alteration of any wall, ceiling, floor, or other structural part of a building, whether or not that alteration affects the external dimensions of the building.

UUU. “Structure” means any manmade object with form, shape, and utility, either permanently or temporarily attached to, placed upon, or set into the ground, stream bed, or lake bed, including, but not limited to roofed and walled buildings, gas or liquid storage tanks, bridges, dams, and culverts.

VVV. “Subdivision” has the meaning given in s. 236.02(12), Wis. Stats.

WWW. “Substantial damage” means damage of any origin sustained by a structure, whereby the cost of restoring the structure to its pre-damaged condition would equal or exceed 50 percent of the equalized assessed value of the structure before the damage occurred.

XXX. “Substantial Improvement” – Any repair, reconstruction, rehabilitation, addition, or improvement of a building or structure, the cost of which equals or exceeds 50 percent of the equalized

assessed value of the structure before the improvement or repair is started. If the structure has sustained substantial damage, any repairs are considered substantial improvement regardless of the work performed. The term does not, however, include either any project for the improvement of a building required to correct existing health, sanitary, or safety code violations identified by the building official and that are the minimum necessary to assure safe living conditions; or any alteration of a historic structure provided that the alteration will not preclude the structure's continued designation as a historic structure.

YYY. "Unnecessary hardship" means where special conditions affecting a particular property, which were not self-created, have made strict conformity with restrictions governing areas, setbacks, frontage, height, or density unnecessarily burdensome or unreasonable in light of the purposes of the chapter.

ZZZ. "Variance" means an authorization by the zoning board of appeals for the construction or maintenance of a building or structure in a manner that is inconsistent with dimensional standards (not uses) contained in the floodplain zoning ordinance.

AAAA. "Violation" means the failure of a structure or other development to be fully compliant with the floodplain zoning ordinance. A structure or other development without required permits, lowest floor elevation documentation, floodproofing certificates, or required floodway encroachment calculations is presumed to be in violation until such time as that documentation is provided.

BBBB. "Watershed" means the entire region contributing runoff or surface water to a watercourse or body of water.

CCCC. "Water surface profile" means a graphical representation showing the elevation of the water surface of a watercourse for each position along a reach of river or stream at a certain flood flow. A water surface profile of the regional flood is used in regulating floodplain areas.

DDDD. "Well" means an excavation opening in the ground made by digging, boring, drilling, driving or other methods to obtain groundwater regardless of its intended use. (Ord. 7083, 2014; Ord. 6735, 2006).

18.11.060 General provisions. A. Areas to be regulated. This chapter regulates all areas within the limits of the city of Eau Claire that would be covered by the regional flood or base flood as shown on the Flood Insurance Rate Map (FIRM) or other maps approved by DNR. **Note:** Base flood elevations are derived from the flood profiles in the flood insurance study (FIS) and are shown as AE, A1-30, and AH Zones on the FIRM. Other regulatory zones are displayed as A and AO Zones. Regional Flood Elevations (RFE) may be derived from other studies. If more than one map or revision is referenced, the most restrictive information shall apply.

B. Official maps and revisions. The boundaries of all floodplain districts are designated as AE, AH, AO or A1-30, on the maps based on the Flood Insurance Study (FIS) listed below. Any change to the base flood elevations (BFE) or any changes to the boundaries of the floodplain or floodway in the FIS or on the Flood Insurance Rate Map (FIRM) must be reviewed and approved by the DNR and FEMA through the Letter of Map Change process (see s. 18.11.230 Amendments) before it is effective. No changes to RFEs on non-FEMA maps shall be effective until approved by the DNR. These maps and revisions are on file in the department of community development of the city of Eau Claire. If more than one map or revision is referenced, the most restrictive information shall apply. Based on the flood insurance study, the following maps apply to the city of Eau Claire:

1. Flood Insurance Rate Map (FIRM), Map Numbers 55035C0032E, 55035C0033E, 55035C0034E, 55035C0041E, 55035C0042E, 55035C0043E, 55035C0051E, 55035C0053E, 55035C0054E, 55035C0058E, 55035C0061E, 55035C0065E, 55035C0066E, 55035C0070E, dated February 18, 2009, and the following map numbers: 55035CINDOB, 55035C0027F, 55035C0029F, 55035C0031F, 55035COO43F, 55035C0044F, 55035C0062F, 550350063F, and 55035C0064F, dated April 16, 2014, with corresponding profiles that are based on the Eau Claire County Flood Insurance Study (FIS) dated April 16, 2014, Volume 55035CV000B. Map numbers 55017C0563E, 55017C0564E, 55017C0707E, 55017C0726E, 55017C0750E, dated March 2, 2010, and the following map numbers: 55017CINDOB, 55017C0706F, dated April 16, 2014, with corresponding profiles that are based on the Chippewa County Flood Insurance Study (FIS) dated April 16, 2014, Volume 55017CV000B.

2. Flood Insurance Rate Maps (FIRM's). Panel 550128 0005 D dated February 4, 1998, with corresponding profiles based on the FIS dated April 16, 2014, with community number 550128.

3. The City of Eau Claire, Wisconsin official flood plain zoning map for the Chippewa River flood plain prepared by the engineering division of the City of Eau Claire, dated March 29, 1993, and approved by WIS/DNR.

C. Establishment of districts. The regional floodplain areas are divided into three districts as follows:

1. The Floodway District (FW) is the channel of a river or stream and those portions of the floodplain adjoining the channel required to carry the regional floodwaters and are contained within AE Zones as shown on the FIRM.

2. The Floodfringe District (FF) is that portion of the floodplain between the regional flood limits and the floodway.

3. The General Floodplain District (GFP) comprises those areas that have been or may be covered by floodwater during the regional flood.

D. Locating floodplain boundaries. Discrepancies between boundaries on the official floodplain zoning map and actual field conditions shall be resolved using the criteria in subd 1. or 2. below. If a significant difference exists, the map shall be amended according to s. 18.11.230. The zoning administrator can rely on a boundary derived from a profile elevation to grant or deny a land use permit, whether or not a map amendment is required. The zoning administrator shall be responsible for documenting actual pre-development field conditions and the basis upon which the district boundary was determined and for initiating any map amendments required under this section. Disputes between the zoning administrator and an applicant over the district boundary line shall be settled according to s. 18.11.190 C. and the criteria in subd. 1. and 2. below. Where the flood profiles are based on established base flood elevations from a FIRM, FEMA must approve any map amendment or revision pursuant to s. 18.11.230 Amendments.

1. If flood profiles exist, the map scale and the profile elevations shall determine the district boundary. The regional or base flood elevations shall govern if there are any discrepancies.

2. Where flood profiles do not exist, the location of the boundary shall be determined by the map scale, visual on-site inspection and any information provided by the Department.

Note: Where the flood profiles are based on established base flood elevations from a flood insurance rate map, FEMA must also approve any map amendment pursuant to s. 18.11.230 A. 6.

E. Removal of lands from floodplain. Compliance with the provisions of this chapter shall not be grounds for removing land from the floodplain unless it is filled at least two feet above the regional or base flood elevation, the fill is contiguous to land outside the floodplain, and the map is amended pursuant to s 18.11.230 Amendments.

Note: This procedure does not remove the requirements for the mandatory purchase of flood insurance. The property owner must contact FEMA to request a letter of map change (LOMC).

F. Compliance. Any development or use within the areas regulated by this chapter shall be in compliance with the terms of this chapter, and other applicable local, state, and federal regulations.

G. Municipalities and state agencies regulated. Unless specifically exempted by law, all cities, villages, towns, and counties are required to comply with this chapter and obtain all necessary permits. State agencies are required to comply if s. 13.48(13), Wis. Stats., applies. The construction, reconstruction, maintenance, and repair of state highways and bridges by the Wisconsin Department of Transportation is exempt when s. 30.2022, Wis. Stats., applies.

H. Abrogation and greater restrictions. 1. This chapter supersedes all of the provisions of any municipal zoning ordinance enacted under Wis. Stats. ss. 59.69, 59.692, or 59.694 for counties, s. 62.23 for cities, or s. 87.30, relating to floodplains. If another ordinance is more restrictive than this chapter, that ordinance shall continue in full force and effect to the extent of the greater restrictions, but not otherwise.

2. This chapter is not intended to repeal, abrogate or impair any existing deed restrictions, covenants or easements. If this chapter imposes greater restrictions, the provisions of this chapter shall prevail.

I. Interpretation. In their interpretation and application, the provisions of this chapter are the minimum requirements liberally construed in favor of the governing body and are not a limitation on or repeal of any other powers granted by the Wisconsin Statutes. If a provision of this chapter, required by ch. NR 116, Wis. Adm. Code, is unclear, the provision shall be interpreted in light of the standards in effect on the date of the adoption of this chapter or in effect on the date of the most recent text amendment to this chapter.

J. Warning and disclaimer of liability. The flood protection standards in this chapter are based on engineering experience and scientific research. Larger floods may occur or the flood height may be increased by man-made or natural causes. This chapter does not imply or guarantee that non-floodplain areas or permitted floodplain uses will be free from flooding and flood damages. Nor does this chapter create liability on the part of, or a cause of action against, the municipality or any officer or employee thereof for any flood damage that may result from reliance on this chapter.

K. Severability. Should any portion of this chapter be declared unconstitutional or invalid by a court of competent jurisdiction, the remainder of this chapter shall not be affected.

L. Annexed areas for cities and villages. The Eau Claire and Chippewa County floodplain zoning provisions in effect on the date of annexation shall remain in effect and shall be enforced by the municipality for all annexed areas until the municipality adopts and enforces an ordinance that meets the requirements of ch. NR 116, Wis. Adm. Code, and the National Flood Insurance Program (NFIP). These annexed lands are described on the municipality's official zoning map. County floodplain zoning provisions are incorporated by reference for the purpose of administering this section and are on file in the office of the municipal zoning administrator. All plats or maps of annexation shall show the regional flood elevation and the location of the floodway.

M. General development standards. The community shall review all permit applications to determine whether proposed building sites will be reasonably safe from flooding. If a proposed building site is in a flood-prone area, all new construction and substantial improvements shall be designed and anchored to prevent flotation, collapse, or lateral movement of the structure resulting from hydrodynamic and hydrostatic loads; be constructed with flood resistant materials; be constructed to minimize flood damages and to ensure that utility and mechanical equipment is designed and/or located so as to prevent water from entering or accumulating within the equipment during conditions of flooding. Subdivisions shall be reviewed for compliance with the above standards. All subdivision proposals (including manufactured home parks) shall include regional flood elevation and floodway data for any development that meets the subdivision definition of this chapter and all other requirements in s. 18.11.170. Adequate drainage shall be provided to reduce exposure to flood hazards and all public utilities and facilities, such as sewer, gas, electrical, and water systems are located and constructed to minimize or eliminate flood damages. (Ord. 7083, 2014; Ord. 6913 §1, 2010; Ord. 6867 §1, 2009; Ord. 6735, 2006).

18.11.070 General standards applicable to all floodplain districts. A. Hydraulic and hydrologic analyses.

1. Except as allowed in par. C. below, no floodplain development shall:

a. Obstruct flow, defined as development which blocks the conveyance of floodwaters by itself or with other development, causing any increase in the regional flood height; or

b. Cause any increase in the regional flood height due to floodplain storage area lost.

2. The zoning administrator shall deny permits if it is determined the proposed development will obstruct flow or cause any increase in the regional flood height, based on the officially adopted flood insurance rate map or other adopted map, unless the provisions of s. 18.11.230 Amendments are met.

3. Obstructions or increases equal to or greater than 0.01 foot may only be permitted if amendments are made to this chapter, the official floodplain zoning maps, floodway lines and water surface profiles, in accordance with s. 18.11.230.

Note: This section refers to obstructions or increases in base flood elevations as shown on the officially adopted flood insurance rate map or other adopted map. Any such alterations must be reviewed and approved by FEMA and the DNR.

B. Watercourse alterations. No land use permit to alter or relocate a watercourse in a mapped floodplain shall be issued until the local official has notified in writing all adjacent municipalities, the Department and FEMA regional offices and required the applicant to secure all necessary state and federal permits. The standards of s. 18.11.170 A. 3. must be met and the flood carrying capacity of any altered or relocated watercourse shall be maintained. As soon as is practicable, but not later than six months after the date of the watercourse alteration or relocation and pursuant to s. 18.11.230 Amendments, the community shall apply for a Letter of Map Revision (LOMR) from FEMA. Any such alterations must be reviewed and approved by FEMA and the DNR through the LOMC process.

C. Chapters 30 and 31, Wis. Stats., development**.** Development that requires a permit from the Department under chs. 30 and 31, Wis. Stats., such as docks, piers, wharves, bridges, culverts, dams, and navigational aids, may be allowed if the necessary permits are obtained and amendments to the floodplain zoning ordinance are made according to s. 18.11.230 Amendments.

D. Public or private campgrounds**.** Public or private campgrounds shall have a low flood damage potential and shall meet the following provisions:

1. The campground is approved by the department of health services;

2. A land use permit for the campground is issued by the zoning administrator;

3. The character of the river system and the campground elevation are such that a 72-hour warning of an impending flood can be given to all campground occupants;

4. There is an adequate flood warning procedure for the campground that offers the minimum notice required under this section to all persons in the campground. This procedure shall include a written agreement between the campground owner, the municipal emergency government coordinator, and the chief law enforcement official which specifies the flood elevation at which evacuation shall occur, personnel responsible for monitoring flood elevations, types of warning systems to be used and the procedures for notifying at-risk parties, and the methods and personnel responsible for conducting the evacuation;

5. This agreement shall be for no more than one calendar year, at which time the agreement shall be reviewed and updated by the officials identified in subd. 4 above to remain in compliance with all applicable regulations, including those of the state department of health services and all other applicable regulations;

6. Only camping units that are fully licensed, if required, and ready for highway use are allowed;

7. The camping units shall not occupy any site in the campground for more than 180 consecutive days, at which time the camping unit must be removed from the floodplain for a minimum of 24 hours;

8. All camping units that remain on site for more than 30 days shall be issued a limited authorization by the campground operator, a written copy of which is kept on file at the campground. Such authorization shall allow placement of a camping unit for a period not to exceed 180 days and shall ensure compliance with all the provisions of this section;

9. The municipality shall monitor the limited authorizations issued by the campground operator to assure compliance with the terms of this section;

10. All camping units that remain in place for more than 180 consecutive days must meet the applicable requirements in either ss. 18.11.080 or 18.11.100 for the floodplain district in which the structure is located;

11. The campground shall have signs clearly posted at all entrances warning of the flood hazard and the procedures for evacuation when a flood warning is issued; and

12. All service facilities, including, but not limited to refuse collection, electrical service, natural gas lines, propane tanks, sewage systems and wells, shall be properly anchored and placed at or floodproofed to the flood protection elevation. (Ord. 7083, 2014; Ord. 6735, 2006).

18.11.080 Floodway district (FW). A. Applicability. This section applies to all floodway areas on the floodplain zoning maps and those identified pursuant to s. 18.11.120 D.

B. Permitted uses. The following open space uses are allowed in the floodway district and the floodway areas of the general floodplain district if they are not prohibited by any other ordinance; they meet the standards in s. 18.11.090; and all permits or certificates have been issued according to s. 18.11.160.

1. Agricultural uses, such as farming, outdoor plant nurseries, horticulture, viticulture, and wild crop harvesting.

2. Nonstructural industrial and commercial uses, such as loading areas, parking areas, and airport landing strips.

3. Nonstructural recreational uses, such as golf courses, tennis courts, archery ranges, picnic grounds, boat ramps, swimming areas, parks, wildlife and nature preserves, game farms, fish hatcheries, shooting, trap and skeet activities, hunting and fishing areas, and hiking and horseback riding trails, subject to the fill limitations of s. 18.11.090 D.

4. Uses or structures accessory to open space uses, or classified as historic structures that comply with s. 18.11.090.

5. Extraction of sand, gravel, or other materials that comply with s. 18.11.090 D.

6. Functionally water-dependent uses, such as docks, piers or wharves, dams, flowage areas, culverts, navigational aids and river crossings of transmission lines, and pipelines that comply with chs. 30 and 31, Wis. Stats.

7. Public utilities, streets, and bridges that comply with s. 18.11.090 C. (Ord. 6735, 2006).

18.11.090 Standards for development in floodway areas. A. General. 1. Any development in floodway areas shall comply with s. 18.11.070 and have a low flood damage potential.

2. Applicants shall provide the following data to determine the effects of the proposal according to s. 18.11.070 A.:

a. A cross-section elevation view of the proposal, perpendicular to the watercourse, showing if the proposed development will obstruct flow; or

b. An analysis calculating the effects of this proposal on regional flood height.

3. The zoning administrator shall deny the permit application if the project will cause any increase in the flood elevations upstream or downstream, based on the data submitted for subd. 2. above.

B. Structures. Structures accessory to permanent open space uses or functionally dependent on a waterfront location may be allowed by permit if the structures comply with the following criteria:

1. The structure is not designed for human habitation, does not have a high flood damage potential and is constructed to minimize flood damage;

2. Shall have a minimum of two openings on different walls having a total net area not less than one square inch for every square foot of enclosed area, and the bottom of all such openings being no higher than one foot above grade. The openings shall be equipped with screens, louvers, or other coverings or devices provided that they permit the automatic entry and exit of floodwaters.

3. It must be anchored to resist flotation, collapse, and lateral movement;

4. Mechanical and utility equipment must be elevated or flood proofed to or above the flood protection elevation; and

5. It must not obstruct flow of flood waters or cause any increase in flood levels during the occurrence of the regional flood.

C. Public utilities, streets, and bridges. Public utilities, streets, and bridges may be allowed by permit, if:

1. Adequate floodproofing measures are provided to the flood protection elevation; and
2. Construction meets the development standards of s. 18.11.070 A.

D. Fills or deposition of materials. Fills or deposition of materials may be allowed by permit, if:

1. The requirements of s. 18.11.070 A. are met;
2. No material is deposited in the navigable channel unless a permit is issued by the Department pursuant to ch. 30, Wis. Stats., and a permit pursuant to s. 404 of the Federal Water Pollution Control Act, Amendments of 1972, 33 U.S.C. 1344, has been issued, if applicable, and the other requirements of this section are met;
3. The fill or other materials will be protected against erosion by riprap, vegetative cover, sheet piling, or bulkheading; and
4. The fill is not classified as a solid or hazardous material.

E. Prohibited uses. All uses not listed as permitted uses in s. 18.11.080 B. are prohibited, including the following uses:

1. Habitable structures, structures with high flood damage potential, or those not associated with permanent open-space uses.
2. Storing materials that are buoyant, flammable, explosive, injurious to property, water quality, or human, animal, plant, fish or other aquatic life.
3. Uses not in harmony with or detrimental to uses permitted in the adjoining districts.
4. Any private or public sewage systems, except portable latrines that are removed prior to flooding, and systems associated with recreational areas and Department-approved campgrounds that meet the applicable provisions of local ordinances and ch. SPS 383, Wis. Adm. Code.
5. Any public or private wells which are used to obtain potable water, except those for recreational areas that meet the requirements of local ordinances and chs. NR 811 and NR 812, Wis. Adm. Code.
6. Any solid or hazardous waste disposal sites.
7. Any wastewater treatment ponds or facilities, except those permitted under s. NR 110.15(3)(b), Wis. Adm. Code.
8. Any sanitary sewer or water supply lines, except those to service existing or proposed development located outside the floodway which complies with the regulations for the floodplain area occupied. (Ord. 7083, 2014; Ord. 6735, 2006).

18.11.100 Floodfringe district (FF). A. Applicability. This section applies to all floodfringe areas shown on the floodplain zoning maps and those identified pursuant to s. 18.11.120 D.

B. Permitted uses. Any structure, land use, or development is allowed in the floodfringe district if the standards in s. 18.11.110 are met, the use is not prohibited by this or any other ordinance or regulation, and all permits or certificates specified in ss. 18.11.160 and 18.11.170 have been issued. (Ord. 6735, 2006).

18.11.110 Standards for development in floodfringe areas. Section 18.11.070 A. shall apply, in addition to the following requirements, according to the use requested.

A. Residential uses. Any habitable structure, including a manufactured home, which is to be erected, constructed, reconstructed, altered, or moved into the floodfringe area, shall meet or exceed the following standards:

1. The elevation of the lowest floor shall be at or above the flood protection elevation on fill unless the requirements of s. 18.11.110 A. 2. can be met. The fill shall be one foot or more above the regional flood elevation extending at least 15 feet beyond the limits of the structure. The Department may authorize other floodproofing measures if the elevation of existing streets or sewer lines makes compliance with the fill standards impractical.
2. The basement or crawlway floor may be placed at the regional flood elevation if it is floodproofed to the flood protection elevation. No basement or crawlway floor is allowed below the regional flood elevation.
3. Contiguous dryland access shall be provided from a structure to land outside of the floodplain, except as provided in subd. 4.
4. In developments where existing street or sewer line elevations make compliance with subd. 3. impractical, the municipality may permit new development and substantial improvements where access roads are at or below the regional flood elevation, if:

a. The municipality has written assurance from police, fire, and emergency services that rescue and relief will be provided to the structure(s) by wheeled vehicles during a regional flood event;

b. The municipality has a DNR approved emergency evacuation plan.

B. Accessory structures or uses.

1. An accessory structure which is not connected to a principal structure may be constructed with its lowest floor at or above the regional flood elevation.

C. Commercial uses. Any commercial structure which is erected, altered, or moved into the floodfringe area shall meet the requirements of s. 18.11.110 A. Subject to the requirements of subd. E., storage yards, surface parking lots, and other such uses may be placed at lower elevations if an adequate warning system exists to protect life and property.

D. Manufacturing and industrial uses. Any manufacturing or industrial structure which is erected, altered, or moved into the floodfringe shall have the lowest floor elevated to or above the flood protection elevation or meet the floodproofing standards in s. 18.11.210. Subject to the requirements of subd E., storage yards, surface parking lots, and other such uses may be placed at lower elevations if an adequate warning system exists to protect life and property.

E. Storage of materials. Materials that are buoyant, flammable, explosive, or injurious to property, water quality, or human, animal, plant, fish, or aquatic life shall be stored at or above the flood protection elevation or floodproofed in compliance with s. 18.11.210. Adequate measures shall be taken to ensure that such materials will not enter the water body during flooding.

F. Public utilities, streets, and bridges. All utilities, streets and bridges shall be designed to be compatible with comprehensive floodplain development plans; and

1. When failure of public utilities, streets, and bridges would endanger public health or safety, or where such facilities are deemed essential, construction or repair of such facilities shall only be permitted if they are designed to comply with s. 18.11.210;

2. Minor roads or non-essential utilities may be constructed at lower elevations if they are designed to withstand flood forces to the regional flood elevation.

G. Sewage systems. All sewage disposal systems shall be designed to minimize or eliminate infiltration of flood water into the system, pursuant to s. 18.11.210, to the flood protection elevation and meet the provisions of all local ordinances and ch. SPS 83, Wis. Adm. Code.

H. Wells. All wells shall be designed to minimize or eliminate infiltration of flood waters into the system, pursuant to s. 18.11.210, to the flood protection elevation and shall meet the provisions of chs. NR 811 and NR 812, Wis. Adm. Code.

I. Solid waste disposal sites. Disposal of solid or hazardous waste is prohibited in floodfringe areas.

J. Deposition of materials. Any deposited material must meet all the provisions of this chapter.

K. Manufactured homes.

1. Owners or operators of all manufactured home parks and subdivisions shall provide adequate surface drainage to minimize flood damage, and shall prepare, secure approval for, and file an evacuation plan, indicating vehicular access and escape routes, with local emergency management authorities.

2. In existing manufactured home parks, all new homes, replacement homes on existing pads, and substantially improved homes shall:

a. Have the lowest floor elevated to the flood protection elevation; and

b. Be anchored so they do not float, collapse or move laterally during a flood.

3. Outside of existing manufactured home parks, including new manufactured home parks and all single units outside of existing parks, all new, replacement, and substantially improved manufactured homes shall meet the residential development standards for the floodfringe in s. 18.11.110 A.

L. Mobile recreational vehicles. All mobile recreational vehicles that are on site for 180 consecutive days or more or are not fully licensed and ready for highway use shall meet the elevation and anchoring requirements in ss. 18.11.110 K. 2. and 3. A mobile recreational vehicle is ready for highway use if it is on its wheels or jacking system, is attached to the site only by quick-disconnect utilities and security devices, and has no permanently attached additions. (Ord. 7083, 2014; Ord. 6735, 2006).

18.11.120 General floodplain district (GFP). A. Applicability. The provisions for this district shall apply to all floodplains mapped as A, AO or AH zones.

B. Permitted uses. Pursuant to subd D., it shall be determined whether the proposed use is located within a floodway or floodfringe area. Those uses permitted in floodway (s. 18.11.080 B.) and floodfringe areas (s. 18.11.100 B.) are allowed within the general floodplain district, according to the standards of subd. C., provided that all permits or certificates required under s. 18.11.160 and 18.11.170 have been issued.

C. Standards for development in the general floodplain district. Section 18.11.080 applies to floodway areas and s. 18.11.100 applies to floodfringe areas. The rest of this chapter applies to either district.

1. In AO/AH Zones the structure's lowest floor must meet one of the conditions listed below whichever is higher:

a. at or above the flood protection elevation; or

b. two (2) feet above the highest adjacent grade around the structure; or

c. the depth as shown on the FIRM.

2. In AO/AH Zones, provide plans showing adequate drainage paths to guide floodwaters around structures.

D. Determining floodway and floodfringe limits. Upon receiving an application for development within the general floodplain district, the zoning administrator shall:

1. Require the applicant to submit two copies of an aerial photograph or a plan which shows the proposed development with respect to the general floodplain district limits, stream channel, and existing floodplain developments, along with a legal description of the property, fill limits and elevations, building floor elevations, and flood proofing measures.

2. Require the applicant to furnish any of the following information deemed necessary by the Department to evaluate the effects of the proposal upon flood height, flood flows, and regional flood elevation, and to determine floodway boundaries:

a. A Hydrologic and Hydraulic Study as specified in s.18.11.170 A. 3.

b. Plan (surface view) showing elevations or contours of the ground; pertinent structure, fill, or storage elevations; size, location, and layout of all proposed and existing structures on the site; location and elevations of streets, water supply, and sanitary facilities; soil types and other pertinent information.

c. Specifications for building construction and materials, floodproofing, filling, dredging, channel improvement, storage, water supply, and sanitary facilities. (Ord. 7083, 2014; Ord. 6735, 2006).

18.11.130 Nonconforming uses and structures. A. General. Applicability. If these standards conform with s. 62.23(7)(h), Wis. Stats., they shall apply to all modifications or additions to any nonconforming use or structure and to the use of any structure or premises which was lawful before the passage of this ordinance or any amendment thereto.

B. The existing lawful use of a structure or its accessory use which is not in conformity with the provisions of this chapter may continue subject to the following conditions:

1. No modifications or additions to a nonconforming use or structure shall be permitted unless they comply with this chapter. The words "modification" and "addition" include, but are not limited to any alteration, addition, modification, structural repair, rebuilding, or replacement of any such existing use, structure, or accessory structure or use. Maintenance is not considered a modification; this includes painting, decorating, paneling, and other nonstructural components, and the maintenance, repair, or replacement of existing private sewage or water supply systems or connections to public utilities. Any costs associated with the repair of a damaged structure are not considered maintenance. The construction of a deck that does not exceed 200 square feet and that is adjacent to the exterior wall of a principal structure is not an extension, modification, or addition. The roof of the structure may extend over a portion of the deck in order to provide safe ingress and egress to the principal structure.

2. If a nonconforming use or the use of a nonconforming structure is discontinued for 12 consecutive months, it is no longer permitted and any future use of the property and any structure or building thereon shall conform to the applicable requirements of this chapter.

3. As requests are received by the municipality for modifications or additions to nonconforming uses or nonconforming structures, a record shall be kept that lists the nonconforming uses and nonconforming structures, their present equalized assessed value, the cost of all modifications or additions which have been permitted, and the percentage of the structure's total current value those modifications represent.

4. No modification or addition to any nonconforming structure or any structure with a nonconforming use, which over the life of the structure would equal or exceed 50% of its present equalized assessed value, shall be allowed unless the entire structure is permanently changed to a conforming structure with a conforming use in compliance with the applicable requirements of this chapter. Contiguous dry land access must be provided for residential and commercial uses in compliance with s. 18.11.110 A. The costs of elevating the lowest floor of a nonconforming building or a building with a nonconforming use to the flood protection elevation are excluded from the 50% provisions of this paragraph.

5. No maintenance to any nonconforming structure or any structure with a nonconforming use, the cost of which would equal or exceed 50% of its present equalized assessed value, shall be allowed unless the entire structure is permanently changed to a conforming structure with a conforming use in compliance with the applicable requirements of this ordinance. Contiguous dry land access must be provided for residential and commercial uses in compliance with s. 18.11.110 A. 3. and 4.

6. If on a per event basis the total value of the work being done under (4) and (5) equals or exceeds 50% of the present equalized assessed value, the work shall not be permitted unless the entire structure is permanently changed to a conforming structure with a conforming use in compliance with the applicable requirements of this ordinance. Contiguous dry land access must be provided for residential and commercial uses in compliance with s. 18.11.110 A. 3. and 4.

7. a. Except as provided in subd b., if any nonconforming structure or any structure with a nonconforming use is destroyed or is substantially damaged, it cannot be replaced, reconstructed or rebuilt unless the use and the structure meet the current ordinance requirements. A structure is considered substantially damaged if the total cost to restore the structure to its pre-damaged condition equals or exceeds 50% of the structure's present equalized assessed value.

b. For nonconforming buildings that are substantially damaged or destroyed by a nonflood disaster, the repair or reconstruction of any such nonconforming building shall be permitted in order to restore it to the size and use in effect prior to the damage event, provided that the minimum federal code requirements below are met and all required permits have been granted prior to the start of construction.

c. Residential Structures. i. Shall have the lowest floor, including basement, elevated to or above the base flood elevation using fill, pilings, columns, posts, or perimeter walls. Perimeter walls must meet the requirements of s. 18.11.210 B.;

ii. Shall be anchored to prevent flotation, collapse, or lateral movement of the structure resulting from hydrodynamic and hydrostatic loads, including the effects of buoyancy and shall be constructed with methods and materials resistant to flood damage;

iii. Shall be constructed with electrical, heating, ventilation, plumbing, and air conditioning equipment and other service facilities that are designed and/or elevated so as to prevent water from entering or accumulating within the components during conditions of flooding.

iv. In A Zones, obtain, review, and utilize any flood data available from a federal, state, or other source.

v. In AO Zones with no elevations specified, shall have the lowest floor, including basement, meet the standards in s. 18.11.120 C. 1.

vi. In AO Zones, shall have adequate drainage paths around structures on slopes to guide floodwaters around and away from the structure.

d. Nonresidential Structures. i. Shall meet the requirements of s. 18.11.130 B. 7. c.

ii. Shall either have the lowest floor, including basement, elevated to or above the regional flood elevation; or, together with attendant utility and sanitary facilities, shall meet the standards in s. 18.11.210 A. or B.

iii. In AO Zones with no elevations specified, shall have the lowest floor, including basement, meet the standards in s. 18.11.120 C. 1.

8. A nonconforming historic structure may be altered if the alteration will not preclude the structure's continued designation as a historic structure, the alteration will comply with s. 18.11.090 A., flood resistant materials are used, and construction practices and floodproofing methods that comply with s. 18.11.210 are used. Repair or rehabilitation of historic structures shall be exempt from the development standards of s. 18.11.130 B. 7. c. if it is determined that the proposed repair or rehabilitation will not preclude the structure's continued designation as a historic structure and is the minimum necessary to preserve the historic character and design of the structure. (Ord. 7083, 2014; Ord. 6867 §2, 2009; Ord. 6735, 2006).

18.11.140 Floodway areas--Nonconforming uses and structures. A. No modification or addition shall be allowed to any nonconforming structure or any structure with a nonconforming use in a floodway area, unless such modification or addition:

1. Has been granted a permit or variance which meets all ordinance requirements;
2. Meets the requirements of s. 18.11.130 A.;
3. Will not increase the obstruction to flood flows or regional flood height; and
4. Any addition to the existing structure shall be floodproofed, pursuant to s. 18.11.210, by means other than the use of fill, to the flood protection elevation;
5. If any part of the foundation below the flood protection elevation is enclosed, the following standards shall apply:

a. The enclosed area shall be designed by a registered architect or engineer to allow for the efficient entry and exit of flood waters without human intervention. A minimum of two openings must be provided with a minimum net area of at least one square inch for every one square foot of the enclosed area. The lowest part of the opening can be no more than 12 inches above the adjacent grade;

b. The parts of the foundation located below the flood protection elevation must be constructed of flood-resistant materials;

c. Mechanical and utility equipment must be elevated or floodproofed to or above the flood protection elevation; and

d. The use must be limited to parking or limited storage.

B. No new on-site sewage disposal system, or addition to an existing on-site sewage disposal system, except where an addition has been ordered by a government agency to correct a hazard to public health, shall be allowed in a floodway area. Any replacement, repair, or maintenance of an existing on-site sewage disposal system in a floodway area shall meet the applicable requirements of all municipal ordinances and ch. SPS 83, Wis. Adm. Code.

C. No new well or modification to an existing well used to obtain potable water shall be allowed in a floodway area. Any replacement, repair, or maintenance of an existing well in a floodway area shall meet the applicable requirements of all municipal ordinances and chs. NR 811 and NR 812, Wis. Adm. Code. (Ord. 7083, 2014; Ord. 6735, 2006).

18.11.150 Floodfringe areas--Nonconforming uses and structures. A. No modification or addition shall be allowed to any nonconforming structure or any structure with a nonconforming use unless such modification or addition has been granted a permit or variance by the municipality, and meets the requirements of s. 18.11.110, except where subd. B. is applicable.

B. Where compliance with the provisions of subd A. would result in unnecessary hardship and only where the structure will not be used for human habitation or be associated with a high flood damage potential, the zoning board of appeals, using the procedures established in s. 18.11.190, may grant a variance from those provisions of subd A. for modifications or additions, using the criteria listed below. Modifications or additions that are protected to elevations lower than the flood protection elevation may be permitted if:

1. No floor is allowed below the regional flood elevation for residential or commercial structures;
2. Human lives are not endangered;
3. Public facilities, such as water or sewer, will not be installed;
4. Flood depths shall not exceed two feet;
5. Flood velocities shall not exceed two feet per second; and
6. The structure shall not be used for storage of materials as described in s. 18.11.110 E.

C. All new private sewage disposal systems, or addition to, replacement, repair, or maintenance of a private sewage disposal system, shall meet all the applicable provisions of all local ordinances and ch. SPS 383, Wis. Adm. Code.

D. All new wells, or addition to, replacement, repair, or maintenance of a well, shall meet the applicable provisions of this chapter and ch. NR 811 and NR 812, Wis. Adm. Code. (Ord. 7083, 2014; Ord. 6867 §3, 2009; Ord. 6735, 2006).

18.11.160 Administration. A. Where a zoning administrator, planning agency, or a board of appeals has already been appointed to administer a zoning ordinance adopted under s. 62.23(7), Wis. Stats., these officials shall also administer this chapter.

B. The zoning administrator is authorized to administer this chapter and shall have the following duties and powers:

1. Advise applicants of the ordinance provisions, assist in preparing permit applications and appeals, and assure that the regional flood elevation for the proposed development is shown on all permit applications.
2. Issue permits and inspect properties for compliance with provisions of this chapter, and issue certificates of compliance where appropriate.
3. Inspect all damaged floodplain structures and perform a substantial damage assessment to determine if substantial damage to the structures has occurred.
4. Keep records of all official actions such as:

a. All permits issued, inspections made, and work approved.

b. Documentation of certified lowest floor and regional flood elevations for floodplain development.

c. Records of water surface profiles, floodplain zoning maps and ordinances, nonconforming uses and structures, including changes, appeals, variances and amendments.

d. All substantial damage assessment reports for floodplain structures.

5. Submit copies of the following items to the Department regional office:

a. Within 10 days of the decision, a copy of any decisions on variances, appeals for map or text interpretations, and map or text amendments.

b. Copies of any case-by-case analyses, and any other information required by the Department including an annual summary of the number and types of floodplain zoning actions taken.

c. Copies of substantial damage assessments performed and all related correspondence concerning the assessments.

Note: Information on conducting substantial damage assessments is available on the DNR website – http://dnr.wi.gov/org/water/wm/dsfm/flood/title.htm

6. Investigate, prepare reports, and report violations of this chapter to the department of community development and attorney for prosecution. Copies of the reports shall also be sent to the Department regional office.

7. Submit copies of text and map amendments to the FEMA regional office. (Ord. 7083, 2014; Ord. 6735, 2006).

18.11.170 Administrative procedures. A. Land use permit. A land use permit shall be obtained before any new development or any structural repair or change in the use of a building or structure, including sewer and water facilities, may be initiated. Application to the zoning administrator shall include:

1. General information.

a. Name and address of the applicant, property owner, and contractor.

b. Legal description, proposed use, and whether it is new construction or a modification.

c. The fee for the above referenced permit as stated in the City of Eau Claire Schedule of Fees and Licenses.

2. Site development plan. A site plan drawn to scale shall be submitted with the permit application form and shall contain:

a. Location, dimensions, area and elevation of the lot;

b. Location of the ordinary highwater mark of any abutting navigable waterways;

c. Location of any structures with distances measured from the lot lines and street center lines;

d. Location of any existing or proposed on-site sewage systems or private water supply systems;

e. Location and elevation of existing or future access roads;

f. Location of floodplain and floodway limits as determined from the official floodplain zoning maps;

g. The elevation of the lowest floor of proposed buildings and any fill using the vertical datum from the adopted study – either national geodetic vertical datum or North American vertical datum;

h. Data sufficient to determine the regional flood elevation in national geodetic vertical datum or North American vertical datum at the location of the development and to determine whether or not the requirements of ss. 18.11.080 or 18.11.100 are met; and

i. Data to determine if the proposed development will cause an obstruction to flow or an increase in regional flood height or discharge according to s. 18.11.070 A. This may include any of the information noted in s. 18.11.090 A.

3. Hydraulic and Hydrologic Studies to analyze development. All hydraulic and hydrologic studies shall be completed under the direct supervision of a professional engineer registered in the State. The study contractor shall be responsible for the technical adequacy of the study. All studies shall be reviewed and approved by the department. The appropriate method of any such studies shall be based on the standards in ch. NR116.07), Wis. Admin. Code, *and Floodplain Hydrologic and Hydraulic Compliance Guide on file with the City at the Community Development Department.*

4. Expiration. All permits issued under the authority of this ordinance shall expire 180 days after issuance unless extended in writing prior to expiration. Permits may be extended once by the City zoning administrator for a maximum of 180 days for good and sufficient cause shown by applicant.

B. Certificate of compliance. No land shall be occupied or used, and no building which is hereafter constructed, altered, added to, modified, repaired, rebuilt, or replaced, shall be occupied until a certificate of compliance is issued by the zoning administrator, except where no permit is required, subject to the following provisions:

1. The certificate of compliance shall show that the building or premises or part thereof, and the proposed use, conform to the provisions of this chapter.

2. Application for such certificate shall be concurrent with the application for a permit.

3. If all ordinance provisions are met, the certificate of compliance shall be issued within 10 days after written notification that the permitted work is completed.

4. The applicant shall submit a certification signed by a registered professional engineer, architect or land surveyor that the fill, lowest floor and floodproofing elevations are in compliance with the permit issued. Floodproofing measures also require certification by a registered professional engineer or architect that floodproofing measures meet the requirements of s. 18.11.210.

C. Other permits. The applicant must secure all necessary permits from federal, state, and local agencies, including those required by the U.S. Army Corps of Engineers under s. 404 of the Federal Water Pollution Control Act, Amendments of 1972, 33 U.S.C. 1344. (Ord. 7083, 2014; Ord. 6735, 2006).

18.11.180 Plan commission. A. The plan commission shall review and advise the governing body on all proposed amendments to this chapter, maps, and text.

B. The plan commission shall not:

1. Grant variances to the terms of this chapter in place of action by the zoning board of appeals; or

2. Amend the text or zoning maps in place of official action by the governing body. (Ord. 6735, 2006).

18.11.190 Zoning board of appeals. The zoning board of appeals, created under s. 62.23(7)(e), Wis. Stats., is hereby authorized or shall be appointed to act for the purposes of this chapter. The board shall exercise the powers conferred by Wisconsin Statutes and adopt rules for the conduct of business. The zoning administrator may not be the secretary of the board.

A. Powers and duties. The zoning board of appeals shall:

1. Appeals - Hear and decide appeals where it is alleged there is an error in any order, requirement, decision, or determination made by an administrative official in the enforcement or administration of this chapter.

2. Boundary disputes - Hear and decide disputes concerning the district boundaries shown on the official floodplain zoning map.

3. Variances - Hear and decide, upon appeal, variances from the ordinance standards.

B. Appeals to the board. 1. Appeals to the board may be taken by any person aggrieved, or by any officer or department of the municipality affected by any decision of the zoning administrator or other administrative officer. Such appeal shall be taken within 30 days unless otherwise provided by the rules of the board, by filing with the official whose decision is in question, and with the board, a notice of appeal specifying the reasons for the appeal. The official whose decision is in question shall transmit to the board all records regarding the matter appealed.

2. Notice and hearing for appeals, including variances.

a. Notice. The board shall:

i. Fix a reasonable time for the hearing;

ii. Publish adequate notice pursuant to Wisconsin Statutes, specifying the date, time, place and subject of the hearing;

iii. Assure that notice shall be mailed to the parties in interest and the Department regional office at least 10 days in advance of the hearing.

b. Hearing. Any party may appear in person or by agent. The board shall:

i. Resolve boundary disputes according to s. 18.11.190 C..

ii. Decide variance applications according to s. 18.11.190 D..

iii. Decide appeals of permit denials according to s. 18.11.200.

3. Decision. The final decision regarding the appeal or variance application shall:

a. Be made within a reasonable time.

b. Be sent to the Department regional office within 10 days of the decision.

c. Be a written determination signed by the chairman or secretary of the board.

d. State the specific facts which are the basis for the board's decision.

e. Either affirm, reverse, vary, or modify the order, requirement, decision, or determination appealed, in whole or in part, dismiss the appeal for lack of jurisdiction, or grant or deny the variance application.

f. Include the reasons for granting an appeal, describing the hardship demonstrated by the applicant in the case of a variance, clearly stated in the recorded minutes of the board proceedings.

C. Boundary disputes. The following procedure shall be used by the board in hearing disputes concerning floodplain district boundaries:

1. If a floodplain district boundary is established by approximate or detailed floodplain studies, the flood elevations or profiles shall prevail in locating the boundary. If none exist, other evidence may be examined.

2. In all cases, the person contesting the boundary location shall be given a reasonable opportunity to present arguments and technical evidence to the board.

3. If the boundary is incorrectly mapped, the board should inform the plan commission or the person contesting the boundary location to petition the governing body for a map amendment according to s. 18.11.230.

D. Variance. 1. The board may, upon appeal, grant a variance from the standards of this chapter if an applicant convincingly demonstrates that:

a. Literal enforcement of the ordinance provisions will cause unnecessary hardship;

b. The hardship is due to adoption of the floodplain ordinance and unique property conditions, not common to adjacent lots or premises. In such case this chapter or map must be amended;

c. The variance is not contrary to the public interest; and

d. The variance is consistent with the purpose of this chapter in s. 18.11.030.

2. In addition to the criteria in subd. 1., to qualify for a variance under FEMA regulations, the following criteria must be met:

a. The variance may not cause any increase in the regional flood elevation.

b. Variances can only be granted for lots that are less than one-half acre and are contiguous to existing structures constructed below the regional flood elevation.

c. Variances shall only be granted upon a showing of good and sufficient cause, shall be the minimum relief necessary, shall not cause increased risks to public safety or nuisances, shall not increase costs for rescue and relief efforts, and shall not be contrary to the purpose of this chapter.

3. A variance shall not:

a. Grant, extend or increase any use prohibited in the zoning district.

b. Be granted for a hardship based solely on an economic gain or loss.

c. Be granted for a hardship which is self-created.

d. Damage the rights or property values of other persons in the area.

e. Allow actions without the amendments to this chapter or map(s) required in s. 18.11.230 A..

f. Allow any alteration of an historic structure, including its use, which would preclude its continued designation as an historic structure.

4. When a floodplain variance is granted, the board shall notify the applicant in writing that it may increase flood insurance premiums up to $25 per $100 of coverage and risks to life and property. A copy shall be maintained with the variance record. (Ord. 7083, 2014; Ord. 6735, 2006).

18.11.200 Review of appeals or permit denials. A. The zoning board of appeals shall review all data related to the appeal. This may include:

1. Permit application data listed in s. 18.11.170 A.;
2. Floodway/floodfringe determination data in s. 18.11.120 D.;
3. Data listed in s. 18.11.090 A. 2. where the applicant has not submitted this information to the zoning administrator.
4. Other data submitted with the application, or submitted to the board with the appeal.

B. For appeals of all denied permits the board shall:

1. Follow the procedures of s. 18.11.190;
2. Consider plan commission recommendations; and
3. Either uphold the denial or grant the appeal.

C. For appeals concerning increases in regional flood elevation the board shall:

1. Uphold the denial where the board agrees with the data showing an increase in flood elevation. Increases may only be allowed after amending the flood profile and map and all appropriate legal arrangements are made with all adversely affected property owners as per the requirements of s. 18.11.230 Amendments; and

2. Grant the appeal where the board agrees that the data properly demonstrates that the project does not cause an increase provided no other reasons for denial exist. (Ord. 7083, 2014; Ord. 6735, 2006).

18.11.210 Floodproofing. A. No permit or variance shall be issued for a non-residential structure designed to be watertight below the regional flood elevation until the applicant submits a plan certified by a registered professional engineer or architect that the floodproofing measures will protect the structure or development to the flood protection elevation and submits a FEMA Floodproofing Certificate.

B. For a structure designed to allow the entry of floodwaters, no permit or variance shall be issued until the applicant submits a plan either:

1. Certified by a registered professional engineer or architect; or
2. Meets or exceeds the following standards:

a. A minimum of two openings having a total net area of not less than one square inch for every square foot of enclosed area subject to flooding;

b. The bottom of all openings shall be no higher than one foot above grade; and

c. Openings may be equipped with screens, louvers, valves, or other coverings or devices provided that they permit the automatic entry and exit of floodwaters.

C. Floodproofing measures shall be designed, as appropriate, to:

1. Withstand flood pressures, depths, velocities, uplift and impact forces and other regional flood factors;

2. Protect structures to the flood protection elevation;

3. Anchor structures to foundations to resist flotation and lateral movement;

4. Minimize or eliminate infiltration of flood waters; and

5. Minimize or eliminate discharges into flood waters. (Ord. 7083, 2014; Ord. 6735, 2006).

18.11.220 Public information. A. Place marks on structures to show the depth of inundation during the regional flood.

B. All maps, engineering data and regulations shall be available and widely distributed.

C. All real estate transfers should show what floodplain zoning district any real property is in. (Ord. 6735, 2006).

18.11.230 Amendments. A. Obstructions or increases may only be permitted if amendments are made to this ordinance, the official floodplain zoning maps, floodway lines, and water surface profiles, in accordance with s. 18.11.230 B.

In AE Zones with a mapped floodway, no obstructions or increases shall be permitted unless the applicant receives a Conditional Letter of Map Revision from FEMA and amendments are made to this ordinance, the official floodplain zoning maps, floodway lines, and water surface profiles, in accordance with s. 18.11.230 B. Any such alterations must be reviewed and approved by FEMA and the DNR.

In A Zones increases equal to or greater than 1.0 foot may only be permitted if the applicant receives a Conditional Letter of Map Revision from FEMA and amendments are made to this ordinance, the official floodplain maps, floodway lines, and water surface profiles, in accordance with s. 18.11.230 B.

B. General. The governing body may change or supplement the floodplain zoning district boundaries and this chapter in the manner outlined in s. 18.11.230. C below. Actions that require an amendment to the ordinance and/or submittal of a Letter of Map Change (LOMC) include, but are not limited to, the following:

1. Any fill or floodway encroachment that obstructs flow causing any increase in the regional flood height.

2. Any change to the floodplain boundaries and/or watercourse alterations on the FIRM.

3. Any changes to any other officially adopted floodplain maps listed in 18.11.060 B.

3. Any floodplain fill which raises the elevation of the filled area to a height at or above the flood protection elevation and is contiguous to land lying outside the floodplain.

4. Correction of discrepancies between the water surface profiles and floodplain maps.

5. Any upgrade to a floodplain zoning ordinance text required by S. NR 116.05, Wis. Adm. Code, or otherwise required by law, or for changes by the municipality.

6. All channel relocations and changes to the maps to alter floodway lines or to remove an area from the floodway or the floodfringe that is based on a base flood elevation from a flood insurance rate map requires prior approval by FEMA.

C. Procedures. Ordinance amendments may be made upon petition of any party according to the provisions of s. 62.23, Wis. Stats. The petitions shall include all data required by ss. 18.11.120 D. and 18.11.170 A. The Land Use Permit shall not be issued until a Letter of Map Revision is issued by FEMA for the proposed changes.

1. The proposed amendment shall be referred to the plan commission for a public hearing and recommendation to the governing body. The amendment and notice of public hearing shall be submitted to the Department regional office for review prior to the hearing. The amendment procedure shall comply with the provisions of s. 62.23, Wis. Stats.

2. No amendments shall become effective until reviewed and approved by the Department.

3. All persons petitioning for a map amendment that obstructs flow, causing any increase in the regional flood shall obtain flooding easements or other appropriate legal arrangements from all adversely affected property owners and notify local units of government before the amendment can be approved by the governing body.

D. Letter amendments. Any FIRM adopted as an official map herein may be amended by FEMA through a Letter of Map Amendment (LOMA), Letter of Map Revision-Fill (LOMR-F), or other applicable provisions to amend individual sites. If granted by FEMA, said amendments do not require approval by the governing body. (Ord. 7083, 2014; Ord. 6735, 2006).

Note: Consult the FEMA web site - www.fema.gov - for the letter map amendment procedure.

18.11.240 Enforcement and penalties. Any violation of the provisions of this chapter by any person shall be unlawful and shall be referred to the municipal attorney who shall expeditiously prosecute all such violators. A violator shall, upon conviction, forfeit to the municipality a penalty of no more than $50/day, together with a taxable cost of such action. Each day of continued violation shall constitute a separate offense. Every violation of this chapter is a public nuisance and the creation may be enjoined and the maintenance may be abated by action at suit of the municipality, the state, or any citizen thereof pursuant to s. 87.30, Wis. Stats. (Ord. 7083, 2014; Ord. 6735, 2006).

Chapter 18.12

SW - SHORELAND-WETLANDS OVERLAY DISTRICT

Sections:

18.12.010 Statutory Authorization.
18.12.020 Findings of Fact and Purpose.
18.12.030 Definitions.
18.12.040 Compliance.
18.12.050 Municipalities and State Agencies Regulated.
18.12.060 Abrogation and Greater Restrictions.
18.12.070 Interpretation.
18.12.080 Shoreland-Wetland Zoning District.
18.12.090 Permitted Uses.
18.12.100 Prohibited Uses.
18.12.110 Nonconforming Structures and Uses.
18.12.120 Administrative Provisions.
18.12.130 Board of Appeals.
18.12.140 Amending Shoreland-Wetland Zoning Regulations.
18.12.150 Enforcement and Penalties.

18.12.010 Statutory Authorization. This chapter is adopted pursuant to the authorization in sections 62.23, 62.231, 87.30 and 144.26, Wis. Stats. (Ord. 5037, 1990).

18.12.020 Findings of Fact and Purpose. Uncontrolled use of the shoreland-wetlands and the pollution of the navigable waters of the City of Eau Claire would adversely affect the public health, safety, convenience, and general welfare and impair the tax base. The legislature of Wisconsin has delegated responsibility to all municipalities to:

A. Promote the public health, safety, convenience and general welfare;

B. Maintain the storm and flood water storage capacity of wetlands;

C. Prevent and control water pollution by preserving wetlands which filter or store sediments, nutrients, heavy metals or organic compounds that would otherwise drain into navigable waters;

D. Protect fish, their spawning grounds, other aquatic life and wildlife by preserving wetlands and other aquatic habitat;

E. Prohibit certain uses detrimental to the shoreland-wetland area; and

F. Preserve shore cover and natural beauty by restricting the removal of natural shoreland cover and controlling shoreland-wetland excavation, filling and other earth moving activities.
(Ord. 5037, 1990).

18.12.030 Definitions. A. For the purpose of administering and enforcing this chapter, the terms or words used herein shall be interpreted as follows: Words used in the present tense include the future; words in the singular number include the plural number; words in the plural number include the singular number. The word "shall" is mandatory, not permissive. All distances, unless otherwise specified, shall be measured horizontally.

B. The following terms used in this chapter mean:

1. "Accessory structure or use" means a detached subordinate structure or a use which is clearly incidental to, and customarily found in connection with, the principal structure or use to which it is related and which is located on the same lot as that of the principal structure or use.

2. "Boathouse" as defined in section 30.121(1), Wis. Stats., means a permanent structure used for the storage of watercraft and associated materials and includes all structures which are totally enclosed, have roofs or walls or any combination of structural parts.

3. "Class 2 public notice" means publication of a public hearing notice under chapter 985, Wis. Stats., in a newspaper of circulation in the affected area. Publication is required on 2 consecutive weeks, the last at least 7 days prior to the hearing.

4. "Conditional use" means a use which is permitted by this chapter provided that certain conditions specified in the chapter are met and that a permit is granted by the plan commission.

5. "Department" means the Wisconsin Department of Natural Resources.

6. "Development" means any man-made change to improved or unimproved real estate, including, but not limited to, the construction of buildings, structures or accessory structures; the construction of additions or substantial alterations to buildings, structures or accessory structures; the placement of buildings or structures; ditching, lagooning, dredging, filling, grading, paving, excavation or drilling operations; and the deposition or extraction of earthen materials.

7. "Drainage system" means one or more artificial ditch, tile drain or similar device which collects surface runoff or groundwater and conveys it to a point of discharge.

8. "Environmental control facility" means any facility, temporary or permanent, which is reasonably expected to abate, reduce or aid in the prevention, measurement, control or monitoring of noise, air or water pollutants, solid waste and thermal pollution, radiation or other pollutants, including facilities installed principally to supplement or to replace existing property or equipment not meeting or allegedly not meeting acceptable pollution control standards or which are to be supplemented or replaced by other pollution control facilities.

9. "Fixed houseboat" as defined in section 30.121(1), Wis. Stats., means a structure not actually used for navigation which extends beyond the ordinary high-water mark of a navigable waterway and is retained in place either by cables to the shoreline or by anchors or spudpoles attached to the bed of the waterway.

10. "Navigable waters" means Lake Superior, Lake Michigan, all natural inland lakes within Wisconsin, and all streams, ponds, sloughs, flowages and other waters within the territorial limits of this state, including the Wisconsin portion of boundary waters, which are navigable under the laws of this state. Under section 144.26(2)(d), Wis. Stats., notwithstanding any other provision of law or administrative rule promulgated thereunder, shoreland ordinances required under sections 61.351 or 62.221, Wis. Stats., and chapter NR 117, Wis. Adm. Code, do not apply to lands adjacent to farm drainage ditches if:

a) Such lands are not adjacent to a natural navigable stream or river;

b) Those parts of such drainage ditches adjacent to such lands were not navigable streams before ditching; and

c) Such lands are maintained in nonstructural agricultural use. Wisconsin's Supreme Court has declared navigable bodies of water that have a bed differentiated from adjacent uplands and levels or flow sufficient to support navigation by a recreational craft of the shallowest draft on an annually recurring basis (Muench v. Public Service Commission, 261 Wis. 492 [1952] and DeGaynor and Co., Inc. v. Department of Natural Resources, 70 Wis.2d 936 [1975]). For example, a stream which is navigable by skiff or canoe during normal spring high water is navigable, in fact, under the laws of this state though it may be dry during other seasons.

11. "Ordinary high-water mark" means the point on the bank or shore up to which the presence and action of surface water is so continuous as to leave a distinctive mark such as by erosion, destruction or prevention of terrestrial vegetation, predominance of aquatic vegetation, or other easily recognized characteristic.

12. "Planning agency" means the city plan commission.

13. "Shorelands" means lands within the following distances from the ordinary high-water mark of navigable waters: 1,000 feet from a lake, pond or flowage; and 300 feet from a river or stream or to the landward side of the floodplain, whichever distance is greater.

14. "Shoreland-wetland district" means the zoning district, created in this shoreland-wetland zoning chapter, comprised of shorelands that are designated as wetlands on the wetlands inventory maps which have been adopted and made a part of this chapter.

15. "Unnecessary hardship" means that circumstance where special conditions, which were not self-created, affect a particular property and make strict conformity with restrictions governing area, setbacks, frontage, height or density unnecessarily burdensome or unreasonable in light of the purposes of this chapter.

16. "Variance" means an authorization granted by the board of zoning appeals to construct or alter a building or structure in a manner that deviates from the dimensional standards of this chapter.

17. "Wetlands" means those areas where water is at, near or above the land surface long enough to support aquatic or hydrophytic vegetation and which have soils indicative of wet conditions.

18. "Wetland alteration" means any filling, flooding, draining, dredging, ditching, tiling, excavating, temporary water level stabilization measures or dike and dam construction in a wetland area. (Ord. 5037, 1990).

18.12.040 Compliance. The use of wetlands and the alteration of wetlands within the shoreland area of the City of Eau Claire shall be in full compliance with the terms of this chapter and other applicable local, state or federal regulations. (However, see section 18.12.110 of this chapter for the standards applicable to nonconforming uses.) All permitted development shall require the issuance of a zoning permit unless otherwise expressly excluded by a provision of this chapter. (Ord. 5037, 1990).

18.12.050 Municipalities and State Agencies Regulated. Unless specifically exempted by law, all cities, villages, towns, and counties are required to comply with this chapter and obtain all necessary permits. State agencies are required to comply if section 13.48(13), Wis. Stats., applies. The construction, reconstruction, maintenance and repair of state highways and bridges by the Wisconsin Department of Transportation is exempt when section 30.12(4)(a), Wis. Stats., applies. (Ord. 5037, 1990).

18.12.060 Abrogation and Greater Restrictions. A. This chapter supersedes all the provisions of any municipal zoning ordinance enacted under sections 62.23 or 87.30, Wis. Stats., which relate to floodplains and shoreland-wetlands, except that where another municipal zoning ordinance is more restrictive than this chapter, that ordinance shall continue in full force and effect to the extent of the greater restrictions, but not otherwise.

B. This chapter is not intended to repeal, abrogate or impair any existing deed restrictions, covenants or easements. However, where this chapter imposes greater restrictions, the provisions of this chapter shall prevail. (Ord. 5037, 1990).

18.12.070 Interpretation. In their interpretation and application, the provisions of this chapter shall be held to be minimum requirements and shall be liberally construed in favor of the city and shall not be deemed a limitation or repeal of any other powers granted by the Wisconsin Statutes. Where a provision of this chapter is required by a standard in chapter NR 117, Wis. Adm. Code, and where the said provision is unclear, the provision shall be interpreted in light of the chapter NR 117 standards in effect on the date of the adoption of this chapter, or in effect on the date of the most recent text amendment to this chapter. (Ord. 5037, 1990).

18.12.080 Shoreland-Wetland Zoning District. A. Shoreland-Wetland Zoning Maps. The following maps are hereby adopted and made a part of this chapter and are on file in the office of the city clerk:

1. Wisconsin wetland inventory maps stamped "FINAL" on December 20, 1985.
2. Floodplain zoning maps titled "City of Eau Claire Official Floodplain Zoning Map" and dated January 1, 1985.
3. United States geological survey maps titled "Eau Claire, East and West Quadrangle".
4. Zoning maps titled "Eau Claire Zoning Maps".

B. District Boundaries. The shoreland-wetland zoning district includes all wetlands in the City of Eau Claire which are shown on the final wetland inventory map that has been adopted and made a part of this chapter and which are:

1. Within 1,000 feet of the ordinary high-water mark of navigable lakes, ponds or flowages. Lakes, ponds or flowages in the City of Eau Claire shall be presumed to be navigable if they are listed in the department publication "Surface Water Resources of Eau Claire County" or "Surface Water Resources of Chippewa County", or are shown on the United States Geological Survey quadrangle maps or other zoning base maps which have been incorporated by reference and made a part of this chapter.
2. Within 300 feet of the ordinary high-water mark of navigable rivers or streams, or to the landward side of the floodplain, whichever distance is greater. Rivers and streams shall be presumed to be navigable if they are designated as either continuous or intermittent waterways on the United States Geological Survey quadrangle maps or other zoning base maps which have been incorporated by reference and made a part of this chapter. Floodplain zoning maps adopted in section 18.12.080 A. shall be used to determine the extent of floodplain areas.

C. Determinations of navigability and ordinary high-water mark location shall initially be made by the zoning administrator. When questions arise, the zoning administrator shall contact the appropriate district office of the department for a final determination of navigability or ordinary high-water mark.

D. When an apparent discrepancy exists between the shoreland-wetland district boundary shown on the official zoning maps and actual field conditions at the time the maps were adopted, the zoning administrator shall contact the appropriate district office of the department to determine if the shoreland-wetland district boundary, as mapped, is in error. If department staff concur with the zoning administrator that a particular area was incorrectly mapped as a wetland, the zoning administrator shall have the authority to immediately grant or deny a zoning permit in accordance with the regulations applicable to the correct zoning district. In order to correct wetland mapping errors shown on the official shoreland-wetland zoning maps, the zoning administrator shall be responsible for initiating a map amendment within a reasonable period. (Ord. 5037, 1990).

18.12.090 Permitted Uses. A. The following activities and uses which do not require the issuance of a zoning permit are permitted subject to the provisions of chapters 30 and 31, Wis. Stats., and the provisions of other local, state and federal laws, if applicable, provided that no wetland alteration occurs:

1. Hiking, fishing, trapping, hunting, swimming, snowmobiling and boating;
2. The harvesting of wild crops, such as marsh hay, ferns, moss, wild rice, berries, tree fruits and tree seeds, in a manner that is not injurious to the natural reproduction of such crops;
3. The practice of silviculture, including the planting, thinning and harvesting of timber;
4. The pasturing of livestock; and
5. The cultivation of agricultural crops.

B. The following uses which do not require the issuance of a zoning permit and which may involve wetland alterations are permitted only to the extent specifically provided below:

1. The practice of silviculture, including limited temporary water level stabilization measures which are necessary to alleviate abnormally wet or dry conditions that would have an adverse impact on the conduct of silvicultural activities if not corrected;
2. The cultivation of cranberries, including limited wetland alterations necessary for the purpose of growing and harvesting cranberries;
3. The maintenance and repair of existing drainage systems to restore pre-existing levels of drainage, including the minimum amount of filling necessary to dispose of dredged spoil, provided that the filling is otherwise permissible and that dredged spoil is placed on existing spoil banks where possible;
4. The construction and maintenance of fences for the pasturing of livestock, including limited excavating and filling necessary for such construction or maintenance;
5. The construction and maintenance of piers, docks, walkways, observation decks and trail bridges built on pilings, including limited excavating and filling necessary for such construction or maintenance;
6. The installation and maintenance of sealed tiles for the purpose of draining lands outside the shoreland-wetland zoning district provided that such installation or maintenance is done in a manner designed to minimize adverse impacts upon the natural functions of the shoreland-wetland listed in subsection 18.12.140 B. of this chapter; and
7. The maintenance, repair, replacement and reconstruction of existing highways and bridges, including limited excavating and filling necessary for such maintenance, repair, replacement or reconstruction.

C. The following conditional uses which are allowed upon the issuance of a conditional use permit and which may include wetland alterations only to the extent specifically provided below:

1. The construction of and maintenance of roads which are necessary for the continuity of the municipal street systems, the provision of essential utility and emergency services or to provide access to uses permitted under section 18.12.090, provided that:
   a) The road cannot, as a practical matter, be located outside the wetland;
   b) The road is designed and constructed to minimize adverse impacts upon the natural functions of the wetland listed in subsection 18.12.140 B. of this chapter;
   c) The road is designed and constructed with the minimum cross-sectional area practical to serve the intended use;
   d) Road construction activities are carried out in the immediate area of the roadbed only; and
   e) Any wetland alteration must be necessary for the construction or maintenance of the road.
2. The construction and maintenance of nonresidential buildings provided that:
   a) The building is used solely in conjunction with a use permitted in the shoreland-wetland district or for the raising of waterfowl, minnows or other wetland or aquatic animals;
   b) The building cannot, as a practical matter, be located outside the wetland;
   c) The building does not exceed 500 square feet in floor area; and
   d) Only limited filling and excavating necessary to provide structural support for the building is allowed.
3. The establishment and development of public and private parks and recreation areas, outdoor education areas, historic, natural and scientific areas, game refuges and closed areas, fish and wildlife habitat improvement projects, game bird and animal farms, wildlife preserves and public boat launching ramps, provided that:
   a) Any private development allowed under this paragraph shall be used exclusively for the permitted purpose;
   b) Only limited filling and excavating necessary for the development of public boat launching ramps, swimming beaches or the construction of park shelters or similar structures is allowed;

c) The construction and maintenance of roads necessary for the uses permitted under this paragraph are allowed only where such construction and maintenance meets the criteria in subsection 18.12.090 C.1. of this chapter; and

d) Wetland alterations in game refuges and closed areas, fish and wildlife habitat improvement projects, game bird and animal farms and wildlife preserves shall be for the purpose of improving wildlife habitat or to otherwise enhance wetland values.

4. The construction and maintenance of electric and telephone transmission lines, water and gas distribution lines and sewage collection lines and related facilities and the construction and maintenance of railroad lines provided that:

a) The utility transmission and distribution facilities and railroad lines cannot, as a practical matter, be located outside the wetland;

b) Only limited filling or excavating necessary for such construction or maintenance is allowed; and

c) Such construction or maintenance is done in a manner designed to minimize adverse impacts upon the natural functions of the wetland listed in subsection 18.12.140 B. (Ord. 5037, 1990).

18.12.100 Prohibited Uses. A. Any use not listed in section 18.12.090 is prohibited, unless the wetland or a portion of the wetland has been rezoned by amendment of this chapter in accordance with section 18.12.140.

B. The use of a boathouse for human habitation and the construction or placement of a boathouse or fixed houseboat below the ordinary high-water mark of any navigable waters are prohibited. (Ord. 5037, 1990).

18.12.110 Nonconforming Structures and Uses. A. The lawful use of a building, structure or property which existed at the time this chapter, or an applicable amendment to this chapter, took effect and which is not in conformity with the provisions of the chapter, including the routine maintenance of such a building or structure, may be continued, subject to the following conditions: Notwithstanding section 62.23(7)(h), Wis. Stats., the repair, reconstruction, renovation, remodeling or expansion of a legal nonconforming structure in existence at the time of adoption or subsequent amendment of this chapter adopted under section 62.231, Wis. Stats., or of an environmental control facility in existence on May 7, 1982, related to that structure, is permitted under section 62.231(5), Wis. Stats. Section 62.23(7)(h), Wis. Stats., applies to any environmental control facility that was not in existence on May 7, 1982, but was in existence on the effective date of this chapter or amendment. All other modifications to nonconforming structures are subject to s. 62.23(7)(h), Wis. Stats., which limits total lifetime structural repairs or alterations to 50% of current fair market value.

B. If a nonconforming use or the use of a nonconforming structure is discontinued for 12 consecutive months, any future use of the building, structure or property shall conform to this chapter.

C. Any legal nonconforming use of property which does not involve the use of a structure and which existed at the time of the adoption or subsequent amendment of this chapter, adopted under section 62.231, Wis. Stats., may be continued although such use does not conform with the provisions of the chapter. However, such nonconforming use may not be extended.

D. The maintenance and repair of nonconforming boathouses which are located below the ordinary high-water mark of any navigable waters shall comply with the requirements of sec. 30.121, Wis. Stats.

E. Uses which are nuisances under common law shall not be permitted to continue as nonconforming uses. (Ord. 5037, 1990).

18.12.120 Administrative Provisions. A. Zoning Administrator. The administrator shall have the following duties and powers:

1. Advise applicants as to the provisions of this chapter and assist them in preparing permit applications and appeal forms.

2. Issue permits and certificates of compliance and inspect properties for compliance with this chapter.

3. Keep records of all permits issued, inspections made, work approved and other official actions.

4. Have access to structure or premises between the hours of 8:00 a.m. and 6:00 p.m. for the purpose of performing these duties.

5. Submit copies of decisions on variances, conditional use permits, appeals for a map or text interpretation, and map or text amendments within 10 days after they are granted or denied, to the appropriate district office of the department.

6. Investigate and report violations of this chapter to the commission and the city attorney.

B. Zoning Permits. 1. When Required. Unless another section of this chapter specifically exempts certain types of development from this requirement, a zoning permit shall be obtained from the zoning

administrator before any new development, as determined by section 18.12.030 6. of this chapter, or any change in the use of an existing building or structure is initiated.

2. Application. An application for a zoning permit shall be made to the zoning administrator upon forms furnished by the municipality and shall include, for the purpose of proper enforcement of these regulations, the following information:

a) General Information.

1) Name, address, and telephone number of applicant, property owner and contractor, where applicable.

2) Legal description of the property and a general description of the proposed use or development.

3) Whether or not a private water supply or sewage system is to be installed.

b) Site Development Plan. The site development plan shall be submitted as a part of the permit application and shall contain the following information drawn to scale:

1) Dimensions and area of the lot;

2) Location of any structures with distances measured from the lot lines and center line of all abutting streets or highways;

3) Description of any existing or proposed on-site sewage systems or private water supply systems;

4) Location of the ordinary high-water mark of any abutting navigable waterways;

5) Boundaries of all wetlands;

6) Existing and proposed topographic and drainage features and vegetative cover;

7) Location of floodplain and floodway limits on the property as determined from floodplain zoning maps;

8) Location of existing or future access roads; and

9) Specifications and dimensions for areas of proposed wetland alteration.

3. Expiration. All permits issued under the authority of this chapter shall expire 6 months from the date of issuance.

C. Certificates of Compliance. 1. Except where no zoning permit or conditional use permit is required, no land shall be occupied or used, and no building which is hereafter constructed, altered, added to, modified, rebuilt or replaced shall be occupied, until a certificate of compliance is issued by the zoning administrator subject to the following provisions:

a) The certificate of compliance shall show that the building or premises or part thereof, and the proposed use thereof, conform to the provisions of this chapter.

b) Application for such certificate shall be concurrent with the application for a zoning or conditional use permit.

c) The certificate of compliance shall be issued within 10 days after notification of the completion of the work specified in the zoning or conditional use permit, providing the building or premises and proposed use thereof conform with all the provisions of this chapter.

2. The administrator may issue a temporary certificate of compliance for a building, premises or part thereof pursuant to rules and regulations established by the municipal governing board.

3. Upon written request from the owner, the administrator shall issue a certificate of compliance for any building or premises existing at the time of the adoption of this chapter, certifying after inspection, the extent and type of use made of the building or premises and whether or not such use conforms to the provisions of this chapter.

D. Conditional Use Permits. 1. Application. Any use listed as a conditional use in this chapter shall be permitted only after an application has been submitted to the zoning administrator and a conditional use permit has been granted by the commission pursuant to chapter 18.35. The department shall be notified 10 days prior to Commission hearing thereon and any commission decision shall be submitted to the DNR within 10 days.

2. Conditions. Upon consideration of the permit application and the standards applicable to the permitted uses in section 18.12.090, the commission shall attach such conditions to a conditional use permit, in addition to those required elsewhere in this chapter, as are necessary to further the purposes of this chapter. Such conditions may include specifications for, without limitation because of specific enumeration: type of shore cover; erosion controls; increased setbacks; specific sewage disposal and water supply facilities; landscaping and planting screens; period of operation; operational control; sureties; deed restrictions; location of piers, docks, parking areas and signs; and type of construction. To secure information upon which to base its determination, the commission may require the applicant to furnish, in addition to the information required for a zoning permit, other pertinent information which is necessary to determine if the proposed use is consistent with the purpose of this chapter.

E. Fees. Fees may be established and charged by the council for the following:

1. Zoning permits.

2. Certificates of compliance.
3. Public hearings.
4. Legal notice publications.
5. Conditional use permits.
6. Rezoning petitions.

F. Recording. Where a zoning permit or conditional use permit is approved, an appropriate record shall be made by the administrator of the land use and structures permitted.

G. Revocation. Where the conditions of a zoning permit or conditional use permit are violated, the permit shall be revoked by the board or commission, respectively. (Ord. 5037, 1990).

18.12.130 Board of Appeals. The Board established under section 18.55 shall exercise the duties and fulfill the responsibilities and obligations under this section.

A. Powers and Duties. The board:

1. Shall hear and decide appeals where it is alleged there is error in any order, requirement, decision or determination made by an administrative official in the enforcement or administration of this chapter.

2. May authorize, upon appeal in specific cases, such variance from the dimensional terms of this chapter as shall not be contrary to the public interest, where, owing to special conditions unique to a property, a literal enforcement of the chapter will result in unnecessary hardship. In the issuance of a variance, the purpose of the chapter shall be observed and substantial justice done. The granting of a variance shall not have the effect of granting or extending any use of property which is prohibited in that zoning district by this chapter.

B. Appeals to the Board. Appeals to the board may be taken by any person aggrieved or by an officer, department, board or bureau of the city affected by any order, requirement, decision, or determination of the administrator or other administrative official. Such appeals shall be taken within a reasonable time, as provided by the rules of the board by filing with the official whose decision is in question, and with the board, a notice of appeal specifying the reasons for the appeal. The administrator or other official whose decision is in question shall transmit to the board all the papers constituting the record on the matter appealed.

C. Public Hearings. 1. Before making a decision on an appeal or application, the board shall, within a reasonable period of time, hold a public hearing. The board shall give public notice of the hearing by publishing a class 2 notice under ch. 985, Stats., specifying the date, time and place of the hearing and the matters to come before the board. At the public hearing, any party may present testimony in person, by agent or by attorney.

2. A copy of such notice shall be mailed to the parties in interest and the appropriate district office of the department at least 10 days prior to all public hearings on issues involving shoreland-wetland zoning.

D. Decisions. 1. The final disposition of an appeal before the board shall be in the form of a written decision, made within a reasonable time after the public hearing. Such decision shall state the specific facts which are the basis of the Board's determination and shall either affirm, reverse, or modify the order, requirement, decision or determination appealed, in whole or in part, or dismiss the appeal for lack of jurisdiction or prosecution.

2. A copy of such decision shall be mailed to the parties in interest and the appropriate district office of the department within 10 days after the decision is issued. (Ord. 5037, 1990).

18.12.140 Amending Shoreland-Wetland Zoning Regulations. A. The Council may alter, supplement or change the district boundaries and the regulations contained in this chapter in accordance with the requirements of section 62.23(7)(d)2., Wis. Stats., NR 117, Wis. Adm. Code, and the following:

1. A copy of each proposed text or map amendment shall be submitted to the appropriate district office of the department within 5 days of the submission of the proposed amendment to the commission.

2. All proposed text and map amendments shall be referred to the plan commission, and a public hearing shall be held, after giving a class 2 notice, as required by section 62.23(7)(d)2., Wis. Stats. The appropriate district office of the department shall be provided with written notice of the hearing at least 10 days prior to such hearing.

B. In order to ensure that this chapter will remain consistent with the shoreland protection objectives of section 144.26, Wis. Stats., the municipal governing body may not rezone a wetland in a shoreland-wetland zoning district, or any portion thereof, where the proposed rezoning may result in a significant adverse impact upon any of the following wetland functions:

1. Storm and flood water storage capacity;

2. Maintenance of dry season stream flow or the discharge of groundwater to a wetland, the recharge of groundwater from a wetland to another area or the flow of groundwater through a wetland;

3. Filtering or storage of sediments, nutrients, heavy metals or organic compounds that would otherwise drain into navigable waters;

4. Shoreline protection against erosion;
5. Fish spawning, breeding, nursery or feeding grounds;
6. Wildlife habitat; or
7. Areas of special recreational, scenic or scientific interest, including scarce wetland types and habitat of endangered species.

C. Where the district office of the department determines that a proposed rezoning may have a significant adverse impact upon any of the criteria listed in subsection 18.12.140 B., the department shall so notify the municipality of its determination either prior to or during the public hearing held on the proposed amendment.

D. The appropriate district office of the department shall be provided with:

1. A copy of the recommendation and report, if any, of the municipal planning agency on a proposed text or map amendment, within 10 days after the submission of those recommendations to the municipal governing body.

2. Written notice of the action on the proposed text or map amendment within 10 days after the action is taken.

E. If the department notifies the commission in writing that a proposed amendment may have a significant adverse impact upon any of the criteria listed in subsection 18.12.140 B., that proposed amendment, if approved by the municipal governing body, shall not become effective until more than 30 days have elapsed since written notice of the municipal approval was mailed to the department, as required by subsection 18.12.140 D.2. If within the 30 day period the department notifies the municipality that the department intends to adopt a superseding shoreland-wetland ordinance for the municipality as provided by section 62.231(6), Wis. Stats., the proposed amendment shall not become effective until the ordinance adoption procedure under section 62.231(6), Wis. Stats., is completed or otherwise terminated. (Ord. 5037, 1990).

18.12.150 Enforcement and Penalties. Any development, building or structure, or any accessory building or structure constructed, altered, added to, modified, rebuilt or replaced or any use or accessory use established after the effective date of this chapter in violation of the provisions of this chapter, by any person, shall be deemed a violation. The zoning administrator shall refer violations to the plan commission and the city attorney who shall prosecute such violations. Any person who violates or refuses to comply with any of the provisions of this chapter shall be subject to a forfeiture of not less than $10 nor more than $100 per offense, together with the taxable costs of such action. Each day of continued violation shall constitute a separate offense. Every violation of this chapter is a public nuisance and the creation thereof may be enjoined and the maintenance thereof may be abated by action at suit of the municipality, the state, or any citizen thereof pursuant to section 87.30(2), Wis. Stats. (Ord. 5037, 1990).

Chapter 18.13

R-1B -- MOBILE HOME PARK DISTRICT

Sections:

18.13.010 Purpose.
18.13.020 Uses Permitted.
18.13.030 Conditional Uses.
18.13.040 Building Height Limit.
18.13.050 Density.
18.13.060 Required Separation Between Mobile Homes.
18.13.065 Detached Accessory Structures.
18.13.070 Setback Required.
18.13.080 Minimum Spaces and Facilities.
18.13.090 Recreation Area.
18.13.100 Off-Street Parking Requirements.
18.13.110 Non-Conforming Mobile Homes.

18.13.010 Purpose. The mobile home park district is established in order to provide areas within the city which are appropriate for locating mobile homes. Development of a mobile home park and placement of a mobile home within such area shall comply with the provisions of this chapter and Chapter 16.12. (Ord. 5037, 1990).

18.13.020 Uses Permitted. The following uses shall be permitted:

A. Mobile homes in mobile home parks for single-family residence;
B. Playgrounds, community centers and recreational uses that are for private recreation purposes;
C. Family day care homes;
D. Accessory uses determined to be customarily incidental to a mobile home or mobile home park. (Ord. 5037, 1990).

18.13.030 Conditional Uses. The following conditional use may be allowed in an R-1B district subject to the provisions of chapters 18.35 and 18.13 and the following standards:

A. Duplex mobile home units, subject to the following standards:

1. Each such duplex unit shall be a mobile home.
2. Duplex mobile home units shall be grouped together in one location, either on adjoining lots adjacent to the corner or periphery of the mobile home park or at a totally distinct and separate location within the mobile home park, apart from single unit mobile homes.
3. A minimum of 3 parking spaces shall be provided for each duplex mobile home stand.
4. The minimum open space distance between duplex mobile home units or between duplex mobile home units and single units shall be 30 feet, except that 20 feet will be allowed from the narrow ends of two structures. Requirements for attached and detached accessory structures shall be the same as set forth in sections 18.13.060 and 18.13.065. (Ord. 5280 §11, 1992; Ord. 5037, 1990).

18.13.040 Building Height Limit. Building height limits shall be one story, but not to exceed fifteen feet in height from ground level. (Ord. 5037, 1990).

18.13.050 Density. The maximum allowable density in mobile home parks shall be eight units per acre and each mobile home site shall conform to the requirements of Wisconsin Administrative Code Section HSS. 177.07. (Ord. 5037, 1990).

18.13.060 Required Separation Between Mobile Homes. The minimum open space distance between homes shall be 20 feet, except that 16 feet will be allowed from the narrow ends of two homes. An attached accessory structure such as an awning, cabana, storage cabinet, carport, windbreak, porch or any other covered or enclosed addition to the mobile home shall, for purposes of separation requirements, be considered a part of the mobile home. Uncovered porches, patios, decks and steps to mobile home entrances may extend 8 feet into the required open space distance. Enclosed porches, windbreaks, storage areas or other non-habitable areas adjacent to the main entrance may extend 4 feet into the required open space distance, provided that not more than 32 square feet of such area is within such space. (Ord. 5280 §12, 1992; Ord. 5037, 1990).

18.13.065 Detached accessory structures. Detached accessory structures shall be included and approved as part of the original or revised mobile home park plan. If such plan has not been approved, a maximum of one accessory structure not exceeding 100 square feet in size per mobile home stand will be allowed if a setback of 10 feet is maintained to adjacent homes and 5 feet to the site's home and to any other accessory structure. Detached accessory structures shall also meet the setback requirements of s. 18.13.070. (Ord. 5280 §13, 1992).

18.13.070 Setback Required. A. There shall be a minimum distance of twenty-five feet from any mobile home to any mobile home park property boundary line, including boundary lines along streets. This distance may be reduced to 20 feet in existing parks where existing mobile homes have already established a distance of less than 25 feet.

B. There shall be a minimum distance of twenty-five feet from the mobile home stand and the face of the curb of the abutting mobile home park street. This distance may be reduced to 20 feet when the distance between sides of homes is increased to 27 feet.

C. No mobile home shall be located closer than sixty feet from any community building, including any washrooms, toilet or laundry facilities within the mobile home park. (Ord. 5280 §14, 1992; Ord. 5037, 1990).

18.13.080 Minimum Spaces and Facilities. All mobile home parks shall be provided with solid, effective screening of trees, shrubs, or fences along the property boundary line separating the park and such adjacent properties, unless waived by the Plan Commission. If the screening is trees or shrubs, there shall be established within six months after issuance of the license for the occupation of such mobile home park the following plantings: a permanent planting of trees and shrubs so arranged and in sufficient numbers so as to form a solid wall of plant material. Such planting shall be a minimum height of two feet at the original time of planting and shall be grown or maintained at a height of not less than eight feet except where line of sight vision is necessary for pedestrian or vehicular traffic safety. Fences shall be erected to a height of 6 feet

except where line of sight is necessary for pedestrian or vehicular traffic safety. (Ord. 5280 §15, 1992; Ord. 5037, 1990).

18.13.090 Recreation Area. At least ten percent of a mobile home park shall be devoted to recreational or common open space use for the enjoyment of the occupants of the park. Such open space should, where conditions permit, be centrally located so as to be free from traffic hazards. (Ord. 5280 §16, 1992; Ord. 5037, 1990).

18.13.100 Off-Street Parking Requirements. A. Occupant Parking. A minimum of two parking spaces shall be provided for each mobile home stand, and this space shall be located within thirty feet of the mobile home stand. Parking in tandem is not permitted.

B. Parking Restrictions. Parking of boats, trailers, campers, snowmobiles or other similar vehicles shall be restricted to an area provided by the park management specifically for that purpose. (Ord. 5280 §17, 1992; Ord. 5037, 1990).

18.13.110 Non-conforming mobile homes. A. A legal non-conforming mobile home may be replaced with another mobile home of any size as long as all existing non-conformities are not increased and there are no new non-conformities created.

B. All other legal non-conforming buildings and structures shall comply with chapter 18.40. (Ord. 5280 §18, 1992).

Chapter 18.14

TND – TRADITIONAL NEIGHBORHOOD DEVELOPMENT

Sections:

18.14.010 General provisions.
18.14.020 Definitions.
18.14.030 Procedures.
18.14.040 Review criteria.
18.14.050 Design standards.

18.14.010 General provisions. A. Statutory authorization. This chapter is adopted pursuant to the authority contained in sections 62.23 and 66.1027 of the Wisconsin Statutes.

B. Purpose. The purpose of this chapter is to allow the optional development and redevelopment of land in the city of Eau Claire consistent with the design principles of traditional neighborhoods. A traditional neighborhood:

1. Is compact;
2. Is designed for the human scale;
3. Provides a mix of uses, including residential, commercial, civic, and open space uses in close proximity to one another within the neighborhood;
4. Provides a mix of housing styles, types, and sizes to accommodate households of all ages, sizes, and incomes;
5. Incorporates a system of relatively narrow, interconnected streets with sidewalks, bikeways, and transit that offer multiple routes for motorists, pedestrians, and bicyclists and provides for the connections of those streets to existing and future developments;
6. Retains existing buildings with historical or architectural features that enhance the visual character of the community;
7. Incorporates significant environmental features into the design;
8. Is consistent with the city of Eau Claire's comprehensive plan.

C. Applicability. The traditional neighborhood development district is an alternative set of standards for development within the city of Eau Claire for new development of 15 acres or more contiguous to existing development or for redevelopment or infill development of 10 acres or more. Areas zoned traditional neighborhood development under the provisions of this chapter shall be designated TND on the zoning map.

D. The fees for a TND – Traditional Neighborhood Development application shall be the same as the fees for a PD – Planned Development.

E. Traditional neighborhood development that requires the subdivision of land may also have applications for each processed concurrently. A general development plan may serve as a preliminary plat if concurrent processing is desired. In no instance shall the platting requirements for subdivisions, as set forth in state law and Title 17 of the municipal code, be waived as a result of this concurrent processing provision.

1. It is the intent of this provision that if plat review is required under Title 17 of the municipal code, that it be accomplished simultaneously with the review of the general development plan under this chapter.

2. If simultaneous review is desired, the general development plan shall be submitted in a form that is in accordance with the requirements of Title 17 of the municipal code relative to preliminary plats, where applicable. Review fees for preliminary plats shall be waived for applications that are submitted concurrently.

3. If there is a conflict between the design standards of Title 17 and the design standards of this chapter, the provisions of this chapter shall apply.

F. Dedication, or offers to dedicate, interest in real property for specific public purposes shall be shown on the general development plan. Such dedications may be made a condition of approval of a traditional neighborhood development if the council finds that:

1. Such additional facilities would serve the public interest in such location;

2. Such facilities would be in accord with the comprehensive plan or component thereof; and

3. The amount and location of land to be dedicated bears a reasonable relationship to the demand generated by the proposed development.

G. Improvements, consistent with city standards or as shown on the comprehensive plan or component thereof, may be required as a condition of approval of a traditional neighborhood development. Improvements may include, but are not limited to paving, curbs, gutters, sidewalks, bikeways, water lines, sewer lines, drainage works, bus turnouts, street lights, and landscaping. Improvement requirements for multi-phased projects shall be applied to each final implementation plan as finalized and shall not consider future phases. (Ord. 6263, 2002).

18.14.020 Definitions. A. The following definitions shall apply for TND requests:

1. Affordable housing – housing in which mortgage, amortization, taxes, insurance, and condominium and association fees, if any, constitute no more than 28% of gross household income for a household of the size which would occupy the unit. In the case of dwelling units for rent, housing that is affordable means housing for which the rent and utilities constitute no more than 30% of gross annual household income for a household of the size that would occupy the unit.

2. Building scale – the relationship between the mass of a building and its surroundings, including the width of street, open space, and mass of surrounding buildings. Mass is determined by the three-dimensional bulk of a structure: height, width, and depth.

3. Secondary dwelling unit – An additional dwelling unit located within the principal dwelling on the lot, in a freestanding building, or above a residential garage.

4. Traditional neighborhood – a compact, mixed-use neighborhood where residential, commercial, and civic buildings are within close proximity to each other. (Ord. 6263, 2002).

18.14.030 Procedures. The procedures for review of a TND – Traditional Neighborhood Development shall be the same as the procedures for review as PD – Planned Developments. Section 18.10.030 and section 18.10.040 B., C., D., and E. of the municipal code. (Ord. 6263, 2002).

18.14.040 Review criteria. A. The following general provisions shall be considered by the plan commission and city council in their review of a traditional neighborhood development.

1. Conformance with the design standards of this chapter;

2. Conformance with the review criteria of the site plan chapter of this title;

3. Suitability of the site itself for development as proposed;

4. Compatibility of the proposed development with adjacent and nearby existing or planned development in terms of scale, mass, height, bulk, uses, activities, traffic, design, structure placement, privacy, views, and similar concerns;

5. Utilization of site planning principles common to high quality development;

6. Conformance with city development and design standards and policies;

7. Availability, both on and off the site, of adequate public utilities and services, including water, sanitary sewer, storm sewer, or other means of surface drainage, streets, sidewalks, traffic control, fire protection, and police protection;

8. Effective mitigation of any potential negative impacts of the proposed development, either on the site itself or off the site;

9. Adequate provision for preservation and maintenance of areas set aside for common ownership;

10. Conformance with the comprehensive plan.

The commission, in making its recommendation to the council, shall consider said criteria as noted above and also take into consideration the recommendations of the department and the comments received at its public hearing. (Ord. 6263, 2002).

<u>18.14.050 Design standards</u>. A. In order to achieve the proximity necessary to make neighborhoods walkable, it is important to mix land uses. A traditional neighborhood development shall consist of a mix of residential uses, a mixed-use area, and open space as provided herein:

1. A mix of residential uses of the following types can occur anywhere in the traditional neighborhood development. For infill development, the mix of residential uses may be satisfied by existing residential uses adjacent to the traditional neighborhood development, provided that such existing uses shall not exceed 25% of the total project area.

a. Single-family detached dwellings, including manufactured homes;
b. Single-family attached dwellings, including duplexes, townhouses, row houses;
c. Multi-family dwellings, including senior housing;
d. Secondary dwelling units ("granny flats");
e. "Special needs" housing, such as community living arrangements and assisted living facilities.

2. A mixed-use area of commercial, residential, civic or institutional, and open space uses shall be provided within a TND. All residents should be within approximately ¼ mile or a 5-minute walk from existing or proposed commercial, civic, and open space area. Individual businesses should provide service to the TND area and not exceed 6,000 square feet in size, unless approved by the plan commission as being compatible within the TND area.

a. Commercial uses.
i. Office activities (see s. 18.05.040 B.)
ii. Personal service (see s. 18.05.040 C.)
iii. Retail sales and service (see s. 18.05.040 D.)
iv. Accommodations (bed and breakfast establishments, small hotels or inns).

b. Residential uses.
i. Single-family attached dwellings, including duplexes, townhouses, row houses;
ii. Multi-family dwellings, including senior housing;
iii. Residential units located on upper floors above commercial uses or to the rear of storefronts;
iv. "Live/work" units that combine a residence and the resident's workplace;
v. "Special needs" housing, such as community living arrangements and assisted living facilities.

c. Civic or institutional uses.
i. Municipal office, fire stations, libraries, museums, community meeting facilities, and post offices;
ii. Transit shelters;
iii. Churches;
iv. Schools.

d. Open space uses.
i. Central square;
ii. Neighborhood park;
iii. Playground.

3. Open space uses identified below should be incorporated in the traditional neighborhood development as appropriate. Large outdoor recreation areas should be located at the periphery of neighborhoods rather than central locations.

a. Environmental corridors;
b. Protected natural areas;
c. Community parks;
d. Streams, ponds, and other water bodies;
e. Stormwater detention/retention facilities.

B. **Development units**. The number of residential dwelling units and the amount of non-residential development (excluding open spaces) shall be determined as follows:

1. In areas devoted to mixed residential uses:

a. The number of single-family attached and detached units permitted shall be between 4-8 dwelling units per acre;
b. The number of multi-family units shall be between 8-21 dwelling units per acre.
c. Secondary dwelling units shall be permissible in addition to the number of dwelling units authorized under this section. However, the total number of secondary dwelling units shall not be more than 10% of the total number of single-family attached and detached units.
d. For each affordable housing unit provided under this section, one additional dwelling unit shall be permitted, up to a maximum 15% increase in dwelling units.

2. In mixed-use areas:

a. The number of single-family and multi-family dwelling units permitted shall be calculated the same as above, plus an additional number of units not to exceed 10% of the amount permitted above.

b. All dwelling units constructed above commercial uses shall be permissible in addition to the number of dwelling units authorized under this section. However, the total number of dwelling units shall not be increased by more than 10 dwelling units or 10%, whichever is greater.

c. The total ground floor area of non-residential development uses, including off-street parking areas, shall not exceed 25% of the traditional neighborhood development.

C. **Open space**. At least 15% of the gross acreage of the traditional neighborhood development must be common, open space as defined by section 18.10.050 H. of this title. At least 25% of the common open space must be dedicated to the public for parkland. Ninety percent of the lots within the areas devoted to mixed residential uses shall be within a ¼ mile or a 5-minute walk from common open space.

D. **Lot and block standards**. 1. Street layouts should provide for perimeter blocks that are generally in the range of 200-400 feet deep by 400-800 feet long. A variety of lot sizes should be provided to facilitate housing diversity and choice and meet the projected requirements of people with different housing needs.

2. Lot widths. Lot widths should create a relatively symmetrical street cross-section that reinforces the public space of the street as a simple, unified public space. A minimum lot width of 60 feet shall be provided.

3. Building setback, front, and side street - mixed-use area. Structures in the mixed-use area have no minimum setback. Commercial and civic or institutional buildings should abut the public sidewalks in the mixed-use area.

4. Building setback, front, and side street - areas of mixed residential uses. Single-family detached residences shall have a building setback in the front between 20-30 feet. Single-family attached residences and multi-family residences shall have a building setback in the front between 10-30 feet.

5. Building setback, rear - areas of mixed residential uses. The principal building on lots devoted to single-family detached residences shall be set back no less than 25 feet from the rear lot line and on lots devoted to multi-family residences a 20 foot setback shall be provided from the rear lot line.

6. Accessory building setbacks shall be provided as per section 18.30.030 of this title except if an accessory building contains a dwelling unit, in which case a 10-foot setback shall be provided from the side and rear lot lines.

7. Side setbacks. An 8-foot side yard is required for one- and two-family dwellings. A 10-foot side yard is required for all other residential units. Zero lot line single-family dwellings are allowed provided that a reciprocal access easement is recorded for both lots and townhouses or other attached dwellings, and provided that all dwellings have pedestrian access to the rear yard through means other than the principal structure.

8. Lot coverage. Building lot coverage shall not exceed 35% in any area in a traditional neighborhood district.

E. **Circulation standards**. The circulation system shall allow for different modes of transportation. The circulation system shall provide functional and visual links within the residential areas, mixed-use area, and open space of the traditional neighborhood development and shall be connected to existing and proposed external development. The circulation system shall provide adequate traffic capacity, provide connected pedestrian and bicycle routes (especially off-street bicycle or multi-use paths), control through traffic, limit lot access to streets of higher traffic volumes, and promote safe and efficient mobility through the traditional neighborhood development.

1. Pedestrian circulation. Convenient pedestrian circulation systems that minimize pedestrian-motor vehicle conflicts shall be provided continuously throughout the traditional neighborhood development. Where feasible, any existing pedestrian routes through the site shall be preserved and enhanced. All streets shall be bordered by sidewalks on both sides except when topographic or other conditions prohibit. The following provisions also apply:

a. Sidewalks in residential areas. Clear and well-lighted sidewalks, 5 feet or wider, shall connect all dwelling entrances to the adjacent public sidewalk.

b. Sidewalks in mixed-use areas. Clear and well-lighted walkways shall connect building entrances to the adjacent public sidewalk and to associated parking areas. Such walkways shall be a minimum of 5 feet in width.

c. Disabled accessibility. Sidewalks shall comply with the applicable requirements of the Americans with Disabilities Act.

d. Crosswalks. Intersections of sidewalks with streets shall be designed with clearly defined edges. Crosswalks shall be well lit and clearly marked with contrasting paving materials at the edges or with striping.

2. Bicycle circulation. Bicycle circulation shall be accommodated on streets and/or dedicated bicycle paths. Where feasible, any existing bicycle routes through the site shall be preserved and enhanced.

3. Public transit access. Where public transit service is available or planned, convenient access to transit stops shall be provided. Where transit shelters are provided, they shall be placed in highly visible locations that promote security through surveillance and shall be well lighted.

4. Motor vehicle circulation. Motor vehicle circulation shall be designed to minimize conflicts with pedestrians and bicycles. Traffic calming features such as narrower streets, curb extensions, traffic circles, and medians shall be used to encourage slow traffic speeds.

a. Streets.

i. Arterial streets should not bisect a traditional neighborhood development.

ii. Collector streets should provide access to commercial or mixed-use buildings, but are also part of the city's major street network. On-street parking, whether diagonal or parallel, is encouraged to slow traffic.

iii. Local streets should provide primary access to individual residential properties. Traffic volumes are relatively low, with a design speed of 25 miles per hour.

iv. Alleys should provide secondary access to residential properties where street frontages are narrow, where the street is designed with a narrow width to provide limited on-street parking, or where alley access development is desired to increase residential densities. Alleys may also provide delivery access or alternate parking access to commercial properties.

b. Street layout. The traditional neighborhood development should maintain the existing street grid, where present, and restore any disrupted street grid where feasible. In addition:

i. Intersections shall be at right angles whenever possible, but in no case less than 75 degrees. Low volume streets may form three-way intersections creating an inherent right-of-way assignment, which significantly reduces accidents without the use of traffic controls.

ii. Corner radii. The roadway edge at street intersections shall be rounded to encourage safe and easy pedestrian crossing.

iii. Circulation. Vehicular access to lots or parcels fronting on a principal arterial street shall be via a service or frontage road. Curb cuts shall not be allowed within 115 feet of the intersection of 2 principal arterial streets, 75 feet from the intersection of 2 minor arterial streets, and 50 feet from the intersection of 2 collector streets. When a combination of the above street classifications intersects, the more restrictive requirement shall apply. This requirement may be waived or modified by the council where it would constitute an unreasonable requirement and would not create a traffic hazard.

iv. The orientation of streets should enhance the visual impact of common open spaces and prominent buildings, create lots that facilitate passive solar design, and minimize street gradients. All streets shall terminate at other streets or at public land, except local streets may terminate in stub streets when such streets act as connections to future phases of the development. Local streets may terminate other than at other streets or public land when there is a connection to the pedestrian and bicycle path network at the terminus.

c. Parking requirements. Parking areas for shared or community use should be encouraged. In addition:

i. In the mixed-use area, any parking lot shall be located at the rear or side of a building. Screening shall be provided as per landscape manual standards.

ii. The parking requirements of chapter 18.25 shall apply with a 25% reduction in required parking allowed in the mixed-use area.

F. **Architectural standards**. A variety of architectural features and building materials is encouraged to give each building or group of buildings a distinct character.

1. Guidelines for existing structures:

a. Existing structures, if determined to be landmarked or national register properties, shall be protected from demolition or encroachment by incompatible structures or landscape development.

b. The landmarks ordinance (chapter 2.65 of the municipal code) shall be used as the criteria for renovating historic or architecturally significant structures.

c. The policies of neighborhood plans for architectural standards shall be considered for renovation projects to ensure neighborhood compatibility.

2. Guidelines for new structures:

a. Height. New structures within a traditional neighborhood development shall be no more than 2½ stories for single-family residential, or 5 stories for commercial, multi-family residential, or mixed-use.

b. To create a visually unified building mass, buildings shall be no more than 30% taller or 30% shorter than the average building height on the block within the mixed-use area.

c. Entries and facades.

i. The architectural features, materials, and the articulation of a facade of a building shall be continued on all sides visible from a public street.

ii. The front facade of the principal building on any lot in a traditional neighborhood development shall face onto a public street.

iii. The front facade shall not be oriented to face directly toward a parking lot.

iv. Porches, pent roofs, roof overhangs, hooded front doors, or other similar architectural elements shall define the front entrance to all residences.

v. For commercial buildings, a minimum of 50% of the front facade on the ground floor shall be transparent, consisting of window or door openings allowing views into and out of the interior.

vi. New structures on opposite sides of the same street should follow similar design guidelines. This provision shall not apply to buildings bordering civic uses.

3. Guidelines for garages and secondary dwelling units. Garages and secondary dwelling units may be placed on a single-family detached residential lot within the principal building or an accessory building, provided that the secondary dwelling unit shall not exceed 800 square feet.

4. Guidelines for exterior signage. A comprehensive sign program is required for the entire traditional neighborhood development that establishes a uniform sign theme. Signs shall share a common style (e.g., size, shape, material). In the mixed-use area, all signs shall be wall signs or canopy signs. The standards of the C-2 district shall apply to the mixed-use area and the R-3 district for the mixed residential area.

5. Guidelines for lighting:

a. Street lighting shall be provided along all streets. Generally, more, smaller lights, as opposed to fewer, high-intensity lights, should be used. Street lights shall be installed on both sides of the street at intervals of no greater than 75 feet. Street lighting design shall meet the minimum standards developed by the illumination engineering society.

b. Exterior lighting shall be provided for all entryways, parking lots, and exterior activity areas and shall be directed downward in order to reduce glare onto adjacent properties.

G. **Landscaping and screening** shall be provided as per landscape manual standards. The TND shall be designed to preserve existing vegetation as is practicable.

H. **Utilities and drainage**. All utilities and drainage improvements shall be provided in accordance with the municipal code and shall be shown on the final site plan.

I. **TND Perimeter**. The TND perimeter shall be designed and used in such a way as to harmonize uses, scale, structure heights, setbacks and mass with existing or planned adjacent or nearby development. Reasonable provisions relating to lighting; landscaping; screening; buffering; activity areas; land uses; setbacks; structure height, width, length, orientation; or similar characteristics of the development may be imposed to assure this compatibility. (Ord. 6263, 2002).

Chapter 18.15

MX – Mixed-use Development Overlay District

Sections:

18.15.010 Purpose.
18.15.020 General Provisions.
18.15.030 Procedure.
18.15.040 Review Criteria.
18.15.050 Standards and Special Requirements for a MX District.

18.15.010 Purpose. The Mixed-use Development Overlay District allows for more efficient and flexible use of land by combining both commercial and residential uses within a site or building. The purposes of the MX District are to:

A. Provide areas for mixed-use development that are carefully planned to promote efficient use of the land and roadway system;
B. Ensure sensitivity to the surrounding neighborhood;
C. Provide appropriate transitions between uses;
D. Encourage reductions in impervious surface by minimizing surface parking;
E. Retain open space by encouraging buildings with high-density uses;
F. Ensure high quality architectural design and materials;
G. Provide good pedestrian, bicycle, and transit access; and
H. Promote innovative site design.

18.15.020 General Provisions. A. The MX District may be applied as an overlay zoning district to C-3, Community Commercial District property.

B. When the MX District has been applied to a site, the C-3 zoning classification for the land shall thereafter be signified as a C-3 MX zoning.

C. The MX District shall have the effect of allowing development to be designed, reviewed, approved, constructed, and used according to the provisions of this chapter, rather than as required by the underlying C-3 District.

D. The MX District follows the provisions and procedures of Chapter 18.10 – Planned Development. All applicable provisions of Section 18.10.020 – General Provisions, shall apply to a MX District.

18.15.030 Procedure. The procedures for review of a MX – Mixed-use Development District shall follow the PD – Planned Development procedures of Section 18.10.030.

18.15.040 Review Criteria. The review criteria and provisions for a Mix Mixed-use Development shall follow the PD-Planned Development procedures of Section 18.10.040.

18.15.050 Standards and Special Requirements for a MX District. The following provisions shall be applied by the commission and council in their consideration of a MX – Mixed-use project:

A. **Permitted Uses**:

1. Institutional
2. Office activities
3. Personal services
4. Retail sales and service
5. Commercial recreational uses
6. All day care centers
7. Dwelling units
8. Essential services

B. **Conditional Uses**:

1. Vehicle services
2. Motels
3. Non-accessory parking
4. Public utility facilities
5. Storage facilities
6. Taverns

C. **Dwelling Density**. A project density of up to 21 units per acre is allowed. A 25% increase in said density may be allowed as per the provisions of 18.10.050 C.

D. **Open Space/Environmental Design**. The site shall include a minimum of 15% common open space or outdoor recreational space. The site shall be designed to preserve existing significant natural features. The commission may impose conditions relating to the preservation of these features.

E. **Setbacks**. Setbacks shall be established by the Site Plan or General Development Plan and shall be based upon the following standards:

1. Setbacks may vary within a mixed-use project consistent with the purpose of the provisions. Setbacks shall maintain and enhance the character of the neighborhood in which the site is located.
2. Setbacks should be 20' from a street and shall be increased for arterial and collector streets. A 50' setback shall be provided from State right-of-way.
3. Perimeter setbacks from the edge of the site shall be similar to the required setbacks of adjacent properties.
4. Adequate vision triangles shall be provided from all street and driveway intersections.

F. **Parking**. The Mixed-use provisions of 18.25.020 E. shall apply to a mixed-use project. Parking in the front yard area is discouraged. Underground or structured parking is encouraged. Surface parking shall be set back a minimum of 5' from a ROW for landscaping and screening. A 10% reduction in parking may be allowed by the commission if the site is near a transit route and a 5% reduction may be allowed for adding bike racks.

G. **Building Material and Arrangement**. A minimum of 50% of the combined area of all building facades shall have an exterior finish of brick, stucco, and/or natural or artificial stone. Buildings shall be arranged in orderly manner with fronts facing streets and rears of buildings towards the interior of the site.

H. **Building Height and Size**. Developments containing buildings greater than one-story in height are required to achieve mixed-use development. The height of the building should be no greater than 40' when adjacent an R-1A, R-1, R-2, or RM District. Buildings greater than 40' in height may be allowed by the commission when judged to be compatible with surrounding development. The ground floor footprint of any commercial space within a building shall not exceed 10,000 square feet, unless the Plan Commission finds the larger footprint is compatible with the proposed development and surrounding area.

I. **Screening, Landscaping, and Buffering**. Screening shall be required for all trash/recycling areas, mechanical equipment, and loading areas. Screening or buffering may be required to provide protection to adjacent residential uses as determined by the Plan Commission. Landscaping shall be required as per the City's Landscape Manual.

J. **Transit**. Mixed-use projects next to transit routes may be required to provide transit stops with shelters as determined by the Plan Commission, with recommendation from the Transit Manager.

K. **Bicycle and Pedestrian Access**. Projects shall provide sidewalks and/or bikeways along all public and private streets as determined appropriate and shall provide on-site bicycle and pedestrian ways to provide logical connections from each building to the street sidewalks to adjacent pathways, and/or bikeways.

L. **Signs**. A master sign plan shall be provided that integrates the design of the project with the sign theme as follows:

1. Pole signs are not permitted.
2. Monument signs shall utilize similar exterior materials as the buildings for the project.
3. Pedestrian-scale signs visible from public streets and sidewalks will be encouraged.
4. Signs will not interfere with automobile circulation and visibility, nor with bike or pedestrian safety.
5. Signs shall meet C-2 District standards.

M. **Lighting.** Exterior lighting shall be provided to address safety concerns on the site and shall comply with the City's Exterior Lighting Manual standards.

N. **Streets, Utilities, and Drainage**. All public streets and utilities shall be designed to meet City standards. Drainage shall be provided to comply with City Code and policy. Private streets shall only be allowed for unique situations where public streets will not fit the site. (Ord. 7068, 2013; Ord. 6999, 2012).

Chapter 18.20

SPECIAL PROVISIONS

Sections:

18.20.010 Unsafe Building.
18.20.020 One Building Per Lot.
18.20.030 Access to a Street.
18.20.040 Splitting of Two-Family Residential Lots.
18.20.050 Allocation of Lot Area.
18.20.060 Yard Encroachments Permitted.
18.20.070 Vision Triangle.
18.20.080 Front Yard.
18.20.090 Rear Yard.
18.20.100 Requirements for Lake and River Frontage Lots.
18.20.110 Requirements for Double Frontage Lots.
18.20.120 Requirements for Side Yards on Corner Lots.
18.20.130 Height Requirements Exception.
18.20.140 Use of Temporary Buildings and Structures.
18.20.150 Temporary Sales Areas.
18.20.160 Use of Flag Lots.
18.20.170 Screening Between Districts.
18.20.180 Rooming Houses and Lodging Houses.
18.20.190 Special Setbacks.
18.20.200 Adult Book Store or Adult Cabaret.
18.20.210 Recycling Facilities.
18.20.220 Manufactured Homes.

The following special provisions establish miscellaneous regulations which have not been specifically provided for in other portions of this title, yet are applicable to all zoning districts unless otherwise indicated:

18.20.010 Unsafe Building. Nothing in this title shall prevent compliance with an order by the zoning administrator or other appropriate authority to correct, improve, or strengthen, or restore to a safe condition any building or any part of a building declared to be unsafe. (Ord. 5037, 1990).

18.20.020 One Building Per Lot. No more than one principal building shall be permitted on a lot or parcel, unless specifically provided for elsewhere in this title. (Ord. 5037, 1990).

18.20.030 Access to a Street. Any lot upon which a principal building is constructed shall have access and at least 25 foot frontage on a public street or along a permanent, unobstructed easement of access to the lot from a public street which has been approved by the zoning administrator as being adequate for that purpose. (Ord. 5037, 1990).

18.20.040 Splitting of Two-Family Residential Lots. A. A two-family dwelling lot which contains or will contain a two-family dwelling may be divided into two separate ownerships, with each resulting lot containing one dwelling unit of the two-family dwelling, provided each such resulting lot contains at least five thousand square feet.

B. A joint cross-access and maintenance agreement will be submitted with this land division application, subject to review and approval by the City, and then shall be recorded by applicant with the land division. (Ord. 7265, 2018; Ord. 5037, 1990).

18.20.050 Allocation of Lot Area. A. No portion of a lot can be used more than once in complying with the provisions for lot area and yard dimensions for construction or alteration of buildings.

B. In computing required lot area, one-half of the width, but not exceeding 10 feet, of any alley abutting any lot may be included as part of the lot area. (Ord. 5037, 1990).

18.20.060 Yard Encroachments Permitted. The following elements of structures may extend or project into a required yard area:

A. Certain architectural features such as cornices, eaves, gutters, chimneys, bay windows, and similar features not to exceed 3 feet provided at least a 1 foot setback is maintained from any property line.

B. Fire escapes, open stairways and fire balconies, all required by a building code, not to exceed 3 1/2 feet.

C. Uncovered porches, patios, paved terraces, decks and steps to building entrances all located less than 3 feet above the ground, not to exceed 10 feet in the front or rear yard and 3 feet in any side yard.

D. Walks, retaining walls, hedges, fences, paved areas, structures used ornamentally or for gardening, certain recreational structures, and essential service structures, all of which are accessory to and normally incidental to the principal use; provided that a 2 foot setback for impervious surfaces which may drain onto abutting properties is maintained.

E. Tennis courts and propane tanks shall be restricted to rear yards or interior side yards and shall meet all required setbacks for accessory buildings.

F. Certain signs as provided in chapter 16.16. (Ord. 5037, 1990).

18.20.070 Vision Triangle. No fence, walk, sign, screen or any planting or other landscape feature shall be erected or maintained in such a way as to obstruct vision or interfere with traffic visibility on a horizontal curve having less sight distance than the minimum standards of chapter 17, or within 20 feet of the corner point of intersection of two streets. Normal vision triangle is the area between 3 feet and 10 feet in height as measured from the street curb. (Ord. 5037, 1990).

18.20.080 Front Yards. A. The front yard shall be as indicated on the plat regardless of the location or facing of any building or structure on the lot. In general, the narrower width of a lot abutting a street for unplatted property or for platted property where the front yard has not been indicated on such plat shall be considered the front yard.

B. Where a line designating a future width of a street is shown on the official map or is otherwise established, the front yard depth shall be measured from such line instead of from the front line of the lot.

C. Residential Front Yards. The purpose of this subsection is to encourage buildings to be in general alignment with each other along a street on a block and to prevent the location of buildings a substantial distance behind the front yard setback of buildings on abutting lots. It is recognized that existing factors, including development, topography and others, have resulted in front yard setbacks which are different from these provisions. Such existing factors shall be considered by the board in its consideration of variances under paragraph 3.

1. In a block where the average of the front yard setbacks of existing buildings within a distance of 100 feet of a building to be erected, repaired or enlarged is up to 10 feet less than the front yard setback required for the district in which such block is located, the minimum front yard setback for such building to be erected, repaired or enlarged may be less than the required setback, but shall not be less than such average setback.

2. Where setbacks are desired to be greater than the minimum required setbacks of a residential district, the following standards shall be used by the zoning administrator in making such determinations:

a) such setback shall not exceed the least side yard setback of the building to be erected, plus either the minimum front yard setback required for such building or the average of the front yard setbacks for buildings on abutting lots, whichever is greater.

b) in instances where side yard setbacks, for a building to be erected, are greater than 20 feet or vary on each side of such building or where the average front yard setback of buildings on abutting lots is less than 30 feet or is more than 60 feet, the zoning administrator shall determine the maximum front yard setback for a building to be erected in a manner consistent with the purpose of these provisions.

3. Erection of a building at a front yard setback which is greater than the standards allowed in paragraph 2 shall require approval of a variance from the board as provided in chapter 18.55.

4. The commission may establish setbacks from a street which are greater than the minimum front yard setbacks of a district in its approval of a plat under chapter 17. (Ord. 5037, 1990).

18.20.090 Rear Yards. In computing the depth of a rear yard for any building where the rear line of the lot adjoins an alley, one-half of the width of such alley may be included as rear yard depth; provided that the depth of the rear yard lying between the alley and the building shall be not less than 15 feet in any residential district and not less than ten feet in any other district. On corner lots the rear yard shall be not less than 8 feet. (Ord. 5037, 1990).

18.20.100 Requirements for Lake and River Frontage Lots. A. Accessory buildings on residential lots may be located in a front yard when such lot has frontage on a lake or river, provided that such accessory building shall be subject to all yard setback requirements of the principal building.

B. The provisions of the Development Guidelines for Waterway and Greenway Areas, which is adopted by reference herein, shall apply in the development of all buildings, parking lots, and other improvements for lots adjacent any lake or river frontage.

C. No development shall occur on lake or river shorelines as defined in such policies exceeding 12 percent in slope. (Ord. 7090, §1, 2014, Ord. 5037, 1990).

18.20.110 Requirements for Double Frontage Lots. In the case of double frontage lots (interior lots having frontages on two more or less parallel streets):

A. All sides of said lots adjacent to streets shall be considered frontage and front yards shall be provided as required.

B. Detached accessory structures shall be only allowed in the yard opposite the front yard from which the principle structure is addressed. (Ord. 5037, 1990).

18.20.120 Requirements for Side Yards on Corner Lots. A. The side yard width for a dwelling on the street side of a corner lot shall comply with the following table:

Width of Lot	Side Yard Width
40 feet	10 feet
45 feet	13 feet
50 feet	16 feet
55 feet	19 feet
60 feet	22 feet
66 feet	26 feet
70 feet	28 feet

except that in R-3 and R-4 districts a maximum of 20 feet is required.

B. Attached or detached garages shall not be located closer to the street line than the side yard setback requirements of the dwelling upon corner lots.

C. For the purpose of side yard regulations, any two-family dwelling or any multiple dwelling shall be considered as one building occupying one lot.

D. The side yard width for a dwelling on the street side of a corner lot shall not be less than six feet and in no case shall any portion of a building be closer than 15 feet from the intersection of the street right-of-way. (Ord. 5037, 1990).

18.20.130 Height Requirements Exceptions. The following are exempted from height limit requirements, provided that no portion of the exempted structure may be used for human occupancy:

A. Those purely ornamental in purpose such as church spires, belfries, cupolas, domes, ornamental towers, flagpoles and monuments.

B. Those necessary appurtenances to mechanical or structural functions, such as chimneys and smokestacks, water tanks, elevator and stairwell penthouses, ventilators, bulkheads, radio towers, private antennas, masts and aerials, television antennas, fire and hose towers, wire transmission structures, cooling towers, or other structures where the manufacturing process requires a greater height.

C. Those structural extensions deemed necessary for appropriate building design such as cornices and parapet walls may extend a maximum of 5 feet above height limitations.

D. Public utility structures.

E. Agriculture-related structures, such as but not limited to, barns, silos, and elevators. (Ord. 5037, 1990).

18.20.140 Use of Temporary Buildings and Structures. Temporary buildings and structures may be placed on a lot and occupied only under the following conditions:

A. A temporary building or structure may be utilized during renovation and repair of damage to a permanent building. Temporary buildings or structures used in conjunction therewith shall be removed when repair of damage is complete.

B. For new construction, temporary buildings and structures incidental to such construction work shall be permitted, provided that such temporary building does not include a dwelling unit and that any temporary building shall be removed within 15 days after construction is complete, but in no case shall the building or structure be allowed for more than 12 months, unless expressly authorized by the department.

C. Temporary buildings which are incidental to and used as a part of a church or school will require site plan approval as provided in this title.

D. Temporary dwellings and campers which are used for new construction of a church or school and are incidental to such construction work, may be allowed with plan commission review of a site plan. Such dwelling and campers shall be removed after construction is complete and are allowed for a time frame as approved by the plan commission. All permits from the health department for sewer, water and other facilities must be obtained.* (Ord. 5726, 1997; Ord. 5037, 1990).

---

* Editor's Note: Ordinance 5726 provided as follows: This ordinance shall expire and shall be null and void after November 1, 1997.

18.20.150 Temporary Sales Areas. A. Christmas tree sales, firework stands or other similar sales areas for special holiday items and any use involving a direct seller's permit as provided in Chapter 5.34 shall be restricted to locate in commercial or industrial districts or in residential areas with an institutional use such as, but not limited to, churches and schools.

B. Any use described in subsection A. shall comply with the following standards:

1. Shall not be located within a required setback.
2. Shall not be located on the lot in a manner which would reduce required parking for the principal use on the property.
3. Shall not be located within a vision triangle nor within 20 feet of a driveway or access point to a property.
4. Shall not be located on a lot in a manner which would interfere with traffic circulation or vehicle or pedestrian safety.

C. Christmas tree sales on residential lots other than institutional uses may be allowed as a conditional use per chapter 18.35. (Old. 5454 §2, 1994; Old. 5037, 1990).

18.20.160 Use of Flag Lots. A flag lot may be used for residential purposes without the minimum required frontage on a street, in the following instances and with the following stipulations:

A. The flag lot makes it possible to better utilize irregularly shaped properties or areas with design limitations.

B. Where flag lots are utilized to eliminate direct access to major roadways.

C. Stipulations:

1. Access shall be provided by a right-of-way, no less than 25 feet wide.
2. No more than one lot may be served by such an access route.
3. All site development standards of the applicable zoning district shall be met. The "pole" portion of the flag lot shall not be considered as part of a lot in application of said development standards. (Ord. 5037, 1990).

18.20.170 Screening Between Districts. A. Statement of Purpose. This section is established to recognize the public and private benefits accrued from functional and aesthetic screening between areas of incompatible land uses, the increasing demand for active and passive recreational areas, the desirability of

providing visual screening of certain parking lots, commercial and industrial areas, and the necessity of providing adequate vehicular vision clearance.

B. District Boundary Lines. Any property located in a commercial or industrial district shall have effective solid screening along all lot lines adjoining any residential district, unless waived by the commission as provided herein. Said solid screening shall be not less than 6 feet in height or more than 8 feet in height in any rear yard or any side yard, or more than 5 feet in height in any front yard. Such screening requirement may be waived by the commission in those cases where the commission finds that:

1. A reasonable probability exists that, within the near future, such adjoining residence district will be zoned for a commercial or industrial use; or

2. A natural topographic barrier or existing screening exists which negates the need for further screening; or

3. Screening is unnecessary to obtain the purposes as set forth under subsection A, is impracticable, or is impossible of performance.

C. Vision Clearance. On a corner lot in any district, no solid screening shall be erected, placed, maintained or grown at a height exceeding 3 feet above the curb level or its equivalent in the front yard within 20 feet of the corner of such lot that is at the street intersection. Solid screening in the front yard of a lot within a commercial or industrial district within 15 feet of any driveway or alley shall not be more than 3 feet above the curb level or its equivalent. (Ord. 5037, 1990).

18.20.180 Rooming Houses and Lodging Houses. A. Conversion of one-family dwellings to rooming houses in the RM district shall only be allowed if properties have 6,000 square feet of lot size and 60 feet of lot width.

B. Conversion of one-family dwellings to rooming houses in the R-3 and R-4 districts are allowed without meeting minimum lot size or lot width standards.

C. Conversion of one-family dwellings to rooming houses requires compliance with state building code standards, which includes but is not limited to 10 foot side yard setbacks, except as provided within such code.

D. Conversion of one-family dwellings to lodging houses in the RM, R-3 or R-4 district is allowed without meeting minimum lot size or lot width standards of the district.

E. Since lodging houses are allowed in a RM, R-3 and R-4 district, 3 unrelated people and a family are allowed per dwelling unit in such districts. In all other residential districts only 2 unrelated people and a family are allowed per dwelling unit.

F. In commercial districts, the term dwelling units shall include rooming house and lodging house. (Ord. 5037, 1990).

18.20.190 Special Setbacks. A. The commission or council in its review of site plans, conditional uses, rezonings, planned developments, plats or other development applications may require setbacks from any public street which differ from the setback for such property as required elsewhere in this title. Designation of a special setback in connection with such review shall require an amendment to this title as provided in chapter 18.65, if such setback applies generally to the entire length of a street and not specifically to the application being considered. Generally, such setbacks will correspond to the following street classification but may be varied depending on need for setback or existing development along such streets:

1. Local street - 30 feet
2. Collector street - 40 feet
3. Minor arterial street - 50 feet
4. Major arterial street - 60 feet
5. Controlled access highway - 70 feet

B. The following special minimum setbacks are established for each street as described and shall supersede any other setback provided in this title:

1. Piedmont Road from Starr Avenue to Mercury Avenue, 23 feet from the south side of the street and 29 feet from the north side of the street.

2. Lexington Boulevard from Nimitz Street to May Street, 20 feet on the south side of the street.

3. South Hastings Way from Badger Avenue to Highland Avenue, 70 feet on the east side of the street.

4. South Hastings Way from Valmont Avenue to Fenwick Avenue, 70 feet on the east side of the street.

5. Former Town of Washington. All land between London Road on the west, Clairemont Avenue on the north, Highways 53 and 93 on the east, Highway 93 and E. Hamilton Avenue on the south, shall provide a 50 foot building setback line along that part abutting on Highways 93 and 53 and Clairemont Avenue; a 20 foot building setback line along that part abutting on London Road, Henry Avenue and E. Hamilton Avenue west of Mall Drive; a 30 foot building setback line along E. Hamilton Avenue between Mall

Drive and Highway 93; and a 15 foot building setback line along the westerly side of Highway 93, extending 270 feet from the E. Hamilton Avenue right-of-way line.

6. Mall Drive from E. Hamilton Avenue to E. Clairemont Avenue, 30 feet on both sides of the street measured from the 136 foot street right-of-way.

7. Skeels Avenue from Mall Drive to London Road, 20 feet on both sides of the street measured from a 75 foot street right-of-way.

8. Drummond 2nd Addition 30 feet for Lots 5, 6, 7, 8 and 9, Block 1, Drummond 2nd Addition.

9. Highway 37 from proposed MacArthur Avenue south to the city limits, 30 feet on the east side of the street.

10. Malden Avenue from Seymour Road to Gala Street, 20 feet on the west side of the street.

11. North Clairemont Avenue from Heimstead Road to Vine Street, 20 feet on the east side of the street.

12. East Clairemont Avenue from Fairfax Street to South Hastings Way, 70 feet on the north side of the street.

13. Fairfax Street from East Clairemont Avenue to Ridge Road, 30 feet on the east side of the street.

14. Highland Avenue from South Hastings Way to Fairfax Street, 20 feet on the south side of the street.

15. Fairfax Avenue from Highland Avenue to the north line of vacated Badger Avenue, 20 feet on the west side of the street.

16. London Road from East Clairemont Avenue to E. Lexington Boulevard, 20 feet on the west side of the street which is within the City of Eau Claire.

17. Highway 53 East Frontage Road from northbound Highway 53, south of Highway 12, 30 feet on the north and east side of the off-ramp.

18. State Street for property addressed 1302 State Street, 75 feet from State Street, 35 feet from Oakwood Place and 30 feet from Gilbert Avenue; and for property addressed 1310 State Street, 25 feet from Summit Avenue, 55 feet from State Street, and 25 feet from Oakwood Place.

19. Freedom Drive for Lots 50 through 67, Independence Park Third Addition, 15 feet from Freedom Drive.

20. Starr Avenue from Redwood Drive south 1,235 feet, 20 feet on the east side of the street.

21. West Clairemont Avenue from the Holiday Inn property line which is zoned C-3 district to the Chippewa River, 30 feet on the northeast side of the street.

22. Hendrickson Drive from West Clairemont Avenue to Heights Drive, 30 feet on the west side of the street.

23. An Area North of Nicholas Drive shown as Lots 1 and 2 of a preliminary Certified Survey Map, and Lot 23 of the preliminary plat of West Cliff Heights, 20 feet, and Lot 3 of such preliminary Certified Survey Map, 25 feet.

24. Lots 1 through 22, East Meadows Subdivision, 20 ft. for the front yard area. Prior to issuance of a building permit for any homes on these lots, applicant shall provide a copy of a recorded common maintenance agreement for this property for staff approval addressing snow removal and lawn maintenance (File #Z-1065-98).

25. Lots 1, 2 and 3 of Certified Survey Map #572629, recorded in Volume 6, Pages 301-302, 150 to 200 ft. for the front yard area. A 30 ft. wide buffer yard is required along the north lot line of Lot 1 as shown on the site plan (File #Z-1066-98). (Ord. 5840, 1998; Ord. 5839, 1998; Ord. 5325, 1993; Ord. 5037, 1990).

26. Lot 1 of CSM #688405, recorded as Vol. 6, pages 204-205, 20 ft. along London Road and Damon Street. (Ord. 6523, 2004; Ord. 5621, 1996).

18.20.200 Adult Book Store or Adult Motion Cabaret. A. Findings and Purpose. The council finds that, due to their nature, the existence of adult book stores and adult cabarets in the city has serious objectionable operational characteristics, such as an effect upon property values, local commerce and crime. Due to the deleterious combined effect on adjacent areas when such uses are concentrated, they should not be permitted to be located in close proximity to each other. Special regulation of these uses is necessary to ensure that these adverse effects will not contribute to the blighting or downgrading of the surrounding neighborhood. Such regulations are contained in these standards. These standards are designed to protect the city's retail trade, maintain property values, prevent crime, and, in general, protect and preserve the quality of the city's neighborhoods, commercial districts and the quality of urban life.

B. Standards. An adult book store or adult cabaret is permitted in the C-3 or CBD District, provided that:

1) Such use shall not be located within 1,000 feet of any residential district as designated within this title with an "R" designation.

2) Such use shall not be located within 1,000 feet of a public or private school.

3) Such use shall not be located within 1,000 feet of another adult bookstore or adult cabaret.

4) The distances provided in this subsection shall be measured by following a straight line, without regard to intervening buildings, from the nearest point of the lot upon which the proposed use is to be located, to the nearest point of the zoning district boundary line or the lot from which the proposed use is to be separated.

5) Violation of these provisions is declared to be a public nuisance per se.

6) Nothing in this subsection is intended to authorize, legalize or permit the establishment, operation or maintenance of any business, building or use which violates any city ordinance or statute of the State of Wisconsin regarding public nuisances, sexual conduct, lewdness or obscene or harmful matter or the exhibition or public display thereof. (Ord. 5973, 1999; Ord. 5955 §3, 1999; Ord. 5037, 1990).

18.20.210 Recycling Facilities. The following provisions shall apply in the location and use of these various types of recycling facilities:

A. Small Collection Facilities. Small collection facilities may be sited in commercial and industrial districts with a certificate of zoning compliance provided they comply with the following conditions:

1. Shall be established in conjunction with an existing commercial or industrial use or community service facility which is allowed within the district;

2. Shall be no larger than 300 square feet and occupy no more than 3 parking spaces not including space that will be periodically needed for removal of materials or exchange of containers;

3. Shall be setback at least 10 feet from any street right-of-way and shall not obstruct pedestrian or vehicular circulation;

4. Shall accept only glass, metals, plastic containers, papers and reusable items. Used motor oil may be accepted with permission of the local public health official and fire department;

5. Shall use no power-driven processing equipment except for bulk reverse vending machines;

6. Shall use containers that are constructed and maintained with durable waterproof and rustproof material, covered when the site is not attended, secured from unauthorized entry or removal of material, and will be of a capacity sufficient to accommodate materials collected during the collection schedule;

7. Shall store all recyclable material in containers and shall not leave materials outside of containers when attendant is not present;

8. Shall be maintained free of litter and any other undesirable materials which are removed at the end of each collection day;

9. Shall not exceed noise levels of 60 dBA as measured at the property line;

10. Attended facilities located within 100 feet of a property zoned or occupied for residential use will operate only during the hours between 8:00 a.m. and 7:00 p.m.;

11. Containers for the 24-hour donation of materials shall be at least 100 feet from any property zoned or occupied for residential use unless there is an acoustical shielding between the containers and the residential use;

12. Containers shall be clearly marked to identify the type of material which may be deposited; the facility shall be clearly marked to identify the name and telephone number of the facility operator and the hours of operation, and display a notice stating that no material will be left outside the recycling enclosure or containers;

13. Recycling facilities may have identification signs with a maximum of 20 percent per side or 16 square feet, whichever is larger, for each side of the facility which faces a street or parking area. Directional signs, bearing no advertising message may be installed with the approval of the department if necessary to facilitate traffic circulation, or if the facility is not visible from the public right-of-way;

14. The facility shall not impair the landscaping required by site plans for any principle use;

15. No additional parking spaces shall be required for customers of a small collection facility located at the established parking lot of a principle use. One space shall be provided for the attendant, if needed.

B. Large Collection Facilities. A large collection facility is one that is larger than 300 square feet, or is on a separate property not accessory to a principle use, and which may have a permanent building. A large collection facility is a permitted use in industrial districts with site plan approval and in a C-3 district with a conditional use permit; provided the facility meets the following standards:

1. The facility does not abut a property zoned or planned for residential use;

2. The facility shall be screened from the public right-of-way by operating in an enclosed building or;

a) in an industrial district within an area enclosed by an opaque fence at least six (6) feet in height with landscaping;

b) at least 150 feet from property zoned or planned for residential use; and

c) meets all applicable noise standards in this subsection.

3. Setbacks and landscape requirements shall be those provided for the zoning district in which the facility is located;

4. All exterior storage of material shall be in sturdy containers or enclosures which are covered, secured, and maintained in good condition. Storage containers for flammable material shall be constructed of non-flammable material. Oil storage shall be in containers approved by the fire department. No storage shall be visible above the height of the fencing;

5. The site shall be maintained free of litter and any other undesirable materials, and shall be cleaned of loose debris on a daily basis;

6. Stacking space shall be provided on site for 6 vehicles or the anticipated peak customer load, whichever is higher, to circulate and to deposit recyclable materials;

7. One parking space shall be provided for each commercial vehicle operated by the recycling facility. Parking requirements for employees will be provided as required by chapter 18.25;

8. Noise levels shall not exceed 60 dBA as measured at the property line of any nearby residentially zoned property;

9. If the facility is located within 500 feet of property zoned, planned or occupied for residential use, it shall not be in operation between 7:00 p.m. and 7:00 a.m., unless approved by the Commission.

C. Processing Facilities. A processing facility is allowed in light industrial districts with a conditional use permit and are permitted in heavy industrial districts with site plan approval. A processing facility shall meet the following conditions:

1. The facility does not abut a property zoned or planned for residential use;

2. In light industrial district, processors shall operate in a wholly enclosed building except for incidental storage, or;

a) within an area enclosed on all sides by an opaque fence or wall not less than 8 feet in height and landscaped on all street frontages; and

b) located at least 150 feet from property zoned or planned for residential use;

3. Setbacks and landscaping requirements shall be those provided for the zoning district in which the facility is located;

4. All exterior storage of material shall be in sturdy containers or fenced enclosures which are secured and maintained in good condition. Storage containers for flammable material shall be constructed of non-flammable material. Oil storage shall be in containers approved by the fire department. No storage shall be visible above the height of the fencing;

5. The site shall be maintained free of litter and any other undesirable materials, and shall be cleaned of loose debris on a daily basis and shall be secured from unauthorized entry and removal of materials when attendants are not present;

6. Space shall be provided on site for the anticipated peak load of customers to circulate, park and deposit recyclable materials. If the facility is open to the public, space shall be provided for a minimum of 10 customers or the peak load, whichever is higher;

7. One parking space shall be provided for each commercial vehicle operated by the processing center. Parking requirements shall otherwise be as provided as stated in chapter 18.25;

8. Noise levels shall not exceed 60 dBA as measured at the property line of nearby residentially zoned or occupied property;

9. If the facility is located within 500 feet of property zoned or planned for residential use, it shall not be in operation between 7:00 p.m. and 7:00 a.m., unless approved by the Commission. (Ord. 5120, 1991; Ord. 5037, 1990).

18.20.220 Manufactured Homes. A. Purpose. The purpose of these provisions is to establish standards governing the appearance and location of manufactured homes. These regulations are intended to allow a mixture of housing types in a manner which will not adversely affect existing neighborhoods. For this reason, standards have been established which regulate the appearance of manufactured homes, allowing in residential zoning districts only those that are acceptably similar in appearance to site-built dwellings on individual lots.

B. Standards. Manufactured homes shall be considered one-family dwellings for the purpose of this title, provided such structures:

1. Consist of more than one section, with a combined width of at least 24 feet, having a minimum floor area of 900 square feet.

2. Have a non-metallic, wood shake, asphalt or fiberglass shingle roof with a minimum slope of 3:12.

3. Have a minimum 8" eave attached to at least 50% of the perimeter of the roof.

4. Have exterior wall coverings consisting of any of the following materials or combinations thereof:

a. Horizontal aluminum, steel or vinyl siding;

b. Wood or simulated wood; or

c. Brick or stone.

5. Have a permanent foundation meeting the requirements of the state uniform dwelling code and approved by the zoning administrator, which surrounds the entire perimeter of the structure and completely encloses the space between the siding and the finished grade.

6. Are permanently affixed to the foundation with the running gear and towing hitch removed, and have an anchoring system that is totally concealed under the structure.

7. Are constructed and installed pursuant to a building permit and subject to all required inspections to insure that the foundation and all on-site work is constructed to minimum standards and that the manufactured home is assembled on-site to assure that it is in compliance with standards regulating the anchoring of the structure to its foundation and other building requirements. Permit fees shall be as provided in section 16.04.090 of the city building code. All manufactured homes shall comply with section 16.04.100 of the city building code and with all erosion control requirements of the state uniform dwelling code.

8. Comply with all other applicable requirements of the zoning district in which the manufactured home is located, such as, but not limited to, lot size and setback requirements.

C. Accessory Structures. An attached accessory structure, as permitted in the zoning district in which the manufactured home is to be located, shall be similar in material and design as that of the manufactured home. Accessory structures, additions, and all on-site improvements shall meet zoning code and state uniform dwelling code standards.

D. Administration. Applications for approval of manufactured homes on individual lots in residential districts shall be submitted to the zoning administrator on a standard prescribed form. Such applications shall include all information necessary to determine the manufactured home's conformity with the standards of this section. Applicant shall sign the application, pay all necessary fees, provide all information necessary to verify that the manufactured home meets the standards for manufactured homes, and be issued a building permit prior to moving the structure to the building site. The zoning administrator, following issuance of a building permit, and upon inspection of the site for the attachment of the structure to a foundation, shall verify that all standards for manufactured homes have been met, as certified in the signed application form. (Ord. 5446 §3, 1994).

Chapter 18.25

OFF-STREET PARKING AND LOADING REQUIREMENTS

Sections:

18.25.010 Purpose.
18.25.020 General Provisions.
18.25.030 Minimum Off-Street Parking Requirements.
18.25.031 Bicycle Parking Requirements.
18.25.035 Maximun Off-Street Parking Requirements.
18.25.040 Off-Street Parking Design Standards.
18.25.050 Residential Off-Street Parking.
18.25.060 Off-Street Loading Requirements.
18.25.070 Off-Street Stacking Requirements.
18.25.080 Minimum Improvement and Maintenance Standards.

18.25.010 Purpose. A. It is the purpose of these requirements that parking and loading space shall be provided and adequately maintained by each property owner in every zoning district for the off-street storage of vehicles used by the occupants, employees or patrons of each building or use constructed or altered under the provisions of this title.

B. Whenever any ordinance, regulation or plan, enacted or adopted by the council is for the purpose of providing off-street automobile parking spaces or for establishing requirements that such spaces be provided within any section of the city, then such plan or requirements shall govern within such section. Otherwise off-street automobile parking spaces shall be provided as required herein, applicable to buildings hereafter erected and uses hereafter established, to such nonconforming uses as may be required to conform to the regulations hereof, and to extensions and enlargements of buildings and uses. (Ord. 5037, 1990).

18.25.020 General Provision. A. General Requirement. All required parking spaces shall be provided on the same parcel as the use for which they are required ("development site"), except as otherwise provided.

B. Exceptions. 1. Off-street parking for non-residential uses may be located within 500 feet of the development site for which it is required.

2. Off-street parking for residential uses may be located within 500 feet of the development site for which it is required with approval of a conditional use permit. The Commission, in reviewing such request, shall consider the likelihood that such spaces will be used by the residence and will not result in vehicles being parked on the street.

3. Off-street parking for nonresidential uses in the CBD central business district may be located within 800 feet of the parcel for which it is required. Residential uses in the CBD may be allowed parking as provided in subsection 2.

4. For any development site with residential or office activities use, as defined by Title 18 of the City code, and for which parking is not on the same development site as the residential or office activities use, the Commission may require a contract for such off-site parking, signed by the parties concerned, and subject to review and approval by the City. Notice of any default, non-performance, or termination of such contract shall immediately be given to the City and shall require submission of a new parking plan for Commission approval.

C. Reductions. 1. Off-street parking requirements for any use located within 500 feet of a regular, established city transit route may be reduced by up to 10 percent by the Commission.

2. Off-street parking requirements in a CBD central business district may be reduced by 5 percent by providing the bicycle spaces required in 18.25.031 by the Commission.

3. Off-street parking requirements of more than 100 stalls may be reduced by the Commission if, based on written certification provided by the applicant, an applicant provides proof of a ride-share program or group transit passes for employees, in the case of an employer.

4. In the case where a parking study clearly shows that the provisions of the amount of space required herein for parking stalls, due to the particular nature of a proposed use or other condition, would be unnecessary or a practical difficulty or would create an unnecessary hardship, the Commission may reduce the requirements contained herein.

5. The Commission may reduce the required parking for joint use of parking areas as provided herein. The parking spaces for churches, religious meeting halls or temples, auditoriums, theaters, or places of public assembly may be provided and used jointly by other establishments not normally open, used, or operated during the same hours as those listed above. A written agreement submitted to the City for approval shall be required for such joint parking.

6. The Commission may reduce the parking requirement for mixed-use development, where it can be shown by a parking analysis deemed acceptable by the City that the types of uses within a mixed-use development will not have peak parking needs at the same time and a reduction in the parking requirement is reasonable.

D. Determination of Required Spaces. In computing the number of parking spaces required by this code, the following shall apply:

1. Where floor area is designated as the standard for determining parking space requirements, floor area shall be the sum of the gross leasable horizontal area of all floors of a nonresidential building, not including storage or mechanical space.

2. Where seating capacity is designated as the standard for determining parking space requirements, the capacity shall mean the number of seating units installed or indicated for, or for each twenty-four (24) lineal inches of seating facilities.

3. Where the number of employees is designated as the standard for determining parking space requirements, the number of employees on the largest shift shall be used for calculation purposes.

4. Fractional numbers shall be increased to the next highest whole number.

5. Parking space requirements for a use not specifically mentioned in this code shall be determined by using the most similar and restrictive parking space requirement as specified by the Director based on the intended use, the location of the use, and the expected patronage or use by individuals operating motor vehicles. (Ord. 7195 §1, 2016; Ord. 7020 §1, 2012; Ord. 6762 §1, 2, 2007; Ord. 5037, 1990).

18.25.030 Minimum Off-Street Parking Requirements. A. Except as otherwise provided in this chapter, off-street parking spaces shall be provided as follows:

1. One-family and two-family dwellings: 2 spaces for each dwelling unit.
2. Multiple dwellings: 1 space for each bedroom in a dwelling unit.
3. Multiple dwellings for the elderly and handicapped: .75 spaces for each dwelling unit.
4. Rooming houses, lodging houses, sororities and fraternities: 1 space per bedroom.
5. Private club or lodge: 1 space for each 200 square feet of floor area.
6. Church, religious meeting hall, or temple: 1 space for each 6 seats in the main auditorium.
7. School:

a) Colleges and universities: because of the unique car parking needs of colleges and universities, a permit application for new construction shall include a parking study prepared by the applicant of the parking needs of the entire campus including the new use and the study shall address a plan to meet the parking needs of the staff and students.

b) High schools: 1 space for each 3 students based on the building's design capacity.
c) Junior high school: 25 spaces plus 1 space for each teacher and staff member.
d) Elementary school: 5 spaces plus one space for each teacher and staff member.

8. Hospital: 1 1/2 spaces for each bed.
9. Sanitarium or institutional home: 1 space for every 3 beds.
10. Funeral Home: 1 space for every 4 seats in a chapel, hall or other gathering area.
11. Auditoriums, theaters, other places of public assembly: 1 space for every 4 seats.
12. Community center, library, museum or similar public or semi- public buildings: 10 spaces plus 1 additional space for each additional 300 square feet of floor area in excess of 2,000 square feet.
13. Hotel or motel: 5 spaces plus 1 space for each sleeping room or suite. For a hotel or motel with convention centers or conference rooms: .7 per guest room plus 10 per 1,000 square feet of gross floor area which is non-guest room.
14. Medical office building: buildings in which 20 percent or more of the gross area is occupied by members of a healing profession. One space for every 200 square feet of the gross area used for medical purposes.
15. Manufacturing or industrial establishments, research or testing laboratory, warehouse, or other similar establishments: 2 spaces for each 3 employees on the highest shift, plus space to accommodate all trucks and other vehicles used in connection therewith.
16. Restaurant, bar, cafe or recreation or amusement establishment not specified herein: 1 space for every 100 square feet of floor area or 1 space per 3 fixed seats, whichever is greater.
17. Bowling alley: 3 spaces per alley.
18. Golf Courses: 4 spaces per hole.
19. Personal services: 1 space for every 200 square feet of floor area.
20. Retail stores selling furniture, appliance, or home improvement products (i.e., carpet, paint, wall paper, etc.): 1 space for every 500 square feet of floor area.
21. Other retail uses: 4 spaces for every 1,000 square feet of gross floor area.
22. Shopping centers: 5.5 spaces for every 1,000 square feet of gross leasable area.
23. All day care centers: 1 space for every staff member plus child drop-off and pick-up area.
24. Office and banks: 1 space for every 300 square feet of gross floor area.
25. Service stations or convenience stores: 4 spaces for every 1,000 square feet of gross floor area; each parking area adjacent to a pump island or fuel area may count as one parking space.
26. All other nonresidential buildings, except those specified above: 1 space for each 300 square feet of floor area.
27. Telemarketing/Call Center: 1 space per employee on the highest shift.
28. Automobile repair: 2 spaces per bay plus 1 space per 250 square feet. (Ord. 7195 §2, 2016; Ord. 6762 §1, 2007; Ord. 5037, 1990).

18.25.031 Bicycle Parking Requirements. A. Off-street bicycle parking facilities shall be provided for new structures and additions as provided in this section.

1. Off-street bicycle parking shall be made available in bicycle racks or equivalent structures to which the bicycle may be locked by the user. Such racks shall support the bicycle upright by its frame in two places and prevent the wheels from tilting or twisting. Structures that require a user-supplied locking device shall be designed to accommodate U-shaped locking devices. When approved by the commission to be located on a public sidewalk, the design of such rack shall match any existing design standard approved by the applicable Business Improvement District.

2. All required racks shall be securely anchored to the ground or the building to prevent removal. The surfacing of such facilities shall be designed and maintained to be mud, snow, and obstruction-free year-round.

3. Bicycle parking facilities shall be located in a clearly designated, lighted, convenient location; being at least as convenient as the majority of the auto parking spaces provided, and where possible, in a location sheltered from the weather.

4. Each required space shall be accessible without having to move another bicycle, and parking a bicycle in any space in the parking facility shall not result in a bicycle obstructing a required walkway or building entry.

5. Bicycle racks shall be installed to conform to the manufacturer's spacing specifications or the following, whichever is greater. The minimum area of at least 24 inches by 72 inches shall be provided per bicycle. Where multiple racks are installed in rows with access aisles separating the rows, the following minimums shall apply:

a) Minimum spacing horizontally between racks shall be 120 inches on center (see larger sized diagram in Index under Zoning-Parking and Loading Requirements).
b) Minimum spacing side-by-side between racks shall be 36 inches (see larger sized diagram in Index under Zoning-Parking and Loading Requirements).

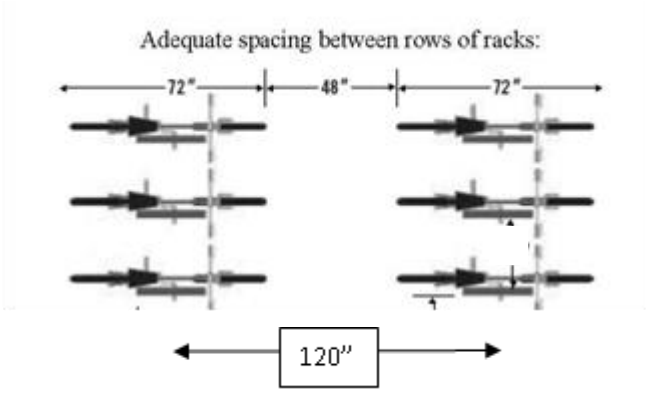

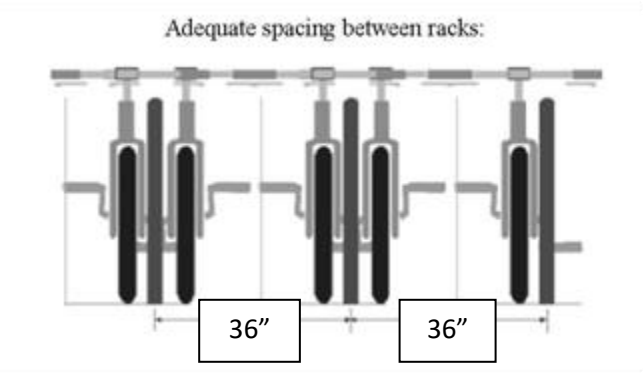

6. Off-street bicycle parking shall be provided as required herein, with the required number of bicycle spaces rounded to the greater even number:

a) Single and two-family dwellings: 0

b) Multiple-family dwellings: 1 bicycle space per dwelling unit; 0 for dwellings where a garage is provided for such units.

c) Rooming houses, lodging houses: 1 bicycle space per four bedrooms

d) Non-residential uses: 1 bicycle space per 10 required automobile spaces, except for schools which shall use the following standards: elementary: sufficient bicycle spaces to accommodate 10 percent of the school design population, middle and high school: sufficient bicycle spaces to accommodate 5 percent of the school design population, and post-secondary schools as determined by the commission based on a plan submitted by the applicant.

In all cases where non-residential bicycle parking is required, no fewer than 4 spaces shall be provided. In addition, non-residential uses having less than 1,000 square feet of gross floor area shall be exempt from the bicycle parking requirements.

7. Required bicycle parking shall be provided within 500 feet of the site for which it is required.

8.After the first 50-bicycle required parking spaces are provided, additional required bicycle parking spaces shall be provided at one half-space per unit listed.

9. The commission can reduce the required bicycle parking spaces by up to 50 percent but any such reduction shall not reduce the number of spaces below 4 except as provided in subsection 10. To justify a reduction in the number of spaces required, the applicant shall demonstrate to the reasonable satisfaction of the commission that extraordinary circumstances exist that the required number of spaces are disproportionate to the expected demand due to reasons such as: accessibility constraints to a parcel for bicyclists, proximity to public bicycle parking, and nature of a business and likelihood customers or clientele would utilize bicycles to travel to the business.

10. The commission may waive the required bicycle parking when there is no reasonable location to provide the bicycle spaces due to physical constraints of the site and the provisions of subsection 7 cannot be met. (Ord. 7020 §2, 2012).

18.25.035 Maximum Off-Street Parking Requirements. In order to prevent excessive lot coverage with pavement or similar hard surfaces and to reduce the heat and surface water run-off from excessive parking areas, the off-street parking area for nonresidential uses shall not exceed the minimum number of spaces required by more than 25%, except as approved by the Commission, based on a parking analysis that shows the need for the extra parking. (Ord. 6762 §2, 2007).

18.25.040 Off-Street Parking Design Standards. The following table contains the minimum standards for parking lot design with 60-foot bay width minimum and with which the design and construction of all parking lots shall comply. The Commission may allow a 5% reduction in distance for any of these standards for long-term parking areas. (Ord. 7195 §3, 2016; Ord. 5037, 1990). (see larger sized diagram in Index under Zoning-Parking and Loading Requirements).

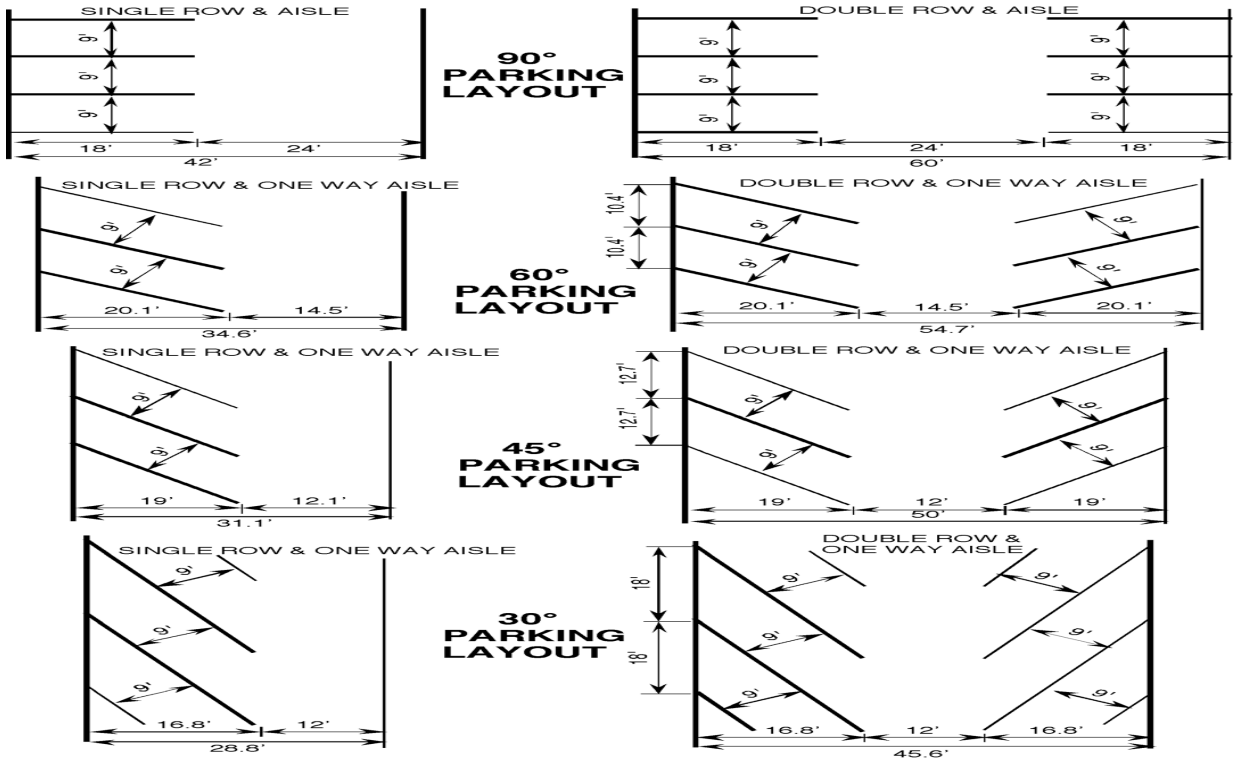

<u>18.25.050 Residential Off-Street Parking</u>. A. It is recognized that uncontrolled residential off-street parking, specifically in residential front yards, is a public nuisance. The purpose of this section is to provide for the regulation of residential off-street parking and to specify the requirements for residential off-street parking as they pertain to the appearance and the health, safety and welfare of the city.

B. <u>Personal Vehicles</u>. It is permissible to park a personal vehicle, including a passenger car, recreation vehicle, van, or pickup truck in the residential districts under the following conditions.

1. Parking is permitted anywhere in the rear yard or interior side yard on an improved surface, as defined in chapter 16.36.

2. Parking is permitted outside of the structure in the front yard or corner side yard on a driveway if space is unavailable or there is no reasonable access to the rear yard or interior side yard. Reasonable access means any 8 ft. or wider area which can be graded to 15% slope or less to provide access to a parking area. Any decision concerning front yard or corner side yard parking under this subsection may be appealed to the plan commission.

3. The vehicle shall be parked a minimum of 2 feet from all property lines.

C. <u>Driveway Standards</u>. Driveway widths shall not exceed 30% of the lot width or 30 feet, whichever is less. The plan commission may waive this standard by applying the provisions set forth in section 16.36.120 c.

D. <u>Front Yard Paved Areas</u>. 1. No parking pad used for parking motor vehicles shall be allowed in the front yard or corner side yard of a residential district if sufficient space is available in any rear yard or interior side yard as provided in subsection B. Sufficient space means a 10 ft. by 20 ft. area per vehicle with reasonable access.

2. Parking in the front yard for new multi-family dwellings is allowed provided the total paved area (parking pad and driveway) for the front yard of the lot shall not exceed 35% of such area in an R-M or R-3 district and 50% of such area in an R-4 district. (Ord. 6685 §3, 2006; Ord. 5037, 1990).

<u>18.25.060 Off-Street Loading Requirements</u>. A. There shall be provided at the time any building is erected or subject to structural alteration, off-street loading spaces in accordance with the following requirements:

1. <u>Office Buildings</u>:
   5,000 to 25,000 sq. ft. of gross floor area . . one 12' x 20' loading space
   25,001 to 50,000 sq. ft. of gross floor area . . one 14' x 35' loading space
   50,001 to 200,000 sq. ft. of gross floor area . . two 14' x 35' loading space
   Add one additional 14' x 35' loading space for each 75,000 square feet of gross floor area above 200,000 square feet.
2. <u>Retail or Service Establishment</u>:
   Less than 5,000 sq. ft. of gross floor area . . one 12' x 20' loading space

5,001 to 20,000 sq. ft. of gross floor area . . one 14' x 35' loading space
20,001 to 100,000 sq. ft. of gross floor area . . two 14' x 35' loading space
Add one additional space for each 75,000 square feet of gross floor area above 100,000 square feet.

3. Industrial and Wholesale Commercial Use:
2,000 to 20,000 sq. ft. of gross floor area . . one 14' x 35' loading space
20,001 to 100,000 sq. ft. of gross floor area . . two 14' x 35' loading space
Add one additional space for each 75,000 square feet of gross floor area above 100,000 square feet.

4. EXCEPTION: Any building in the CBD central business district shall be exempt from providing loading spaces as required in this section.

B. Loading spaces shall be provided on each lot in compliance with the following requirements:

1. The loading space shall be completely contained on the lot it is intended to serve.

2. The loading space shall be arranged on the lot in such a way as to allow normal movement of traffic in and around the loading area.

3. No loading space shall be permitted to extend over any pedestrian sidewalk or bicycle path. (Ord. 5037, 1990).

18.25.070 Off-Street Stacking Requirements. Uses which have drive-up service windows or devices shall provide on-site parking spaces to stack vehicles waiting to reach the drive-up service window or device in accordance with the following:

A. Restaurant: 6 storage spaces for each service window or device.

B. Banks: 4 storage spaces for each service window or device.

C. Drive-in theater: 10 percent of the spaces provided within the drive-in theater divided by the number of cashiers to be provided in the approach lanes to the cashiers provided such storage does not interfere with other required off-street parking.

D. Car wash: 6 storage spaces for each service bay for automatic car washes and 3 storage spaces for each service bay for manual car washes.

E. All other: 3 storage spaces for each service window or device.

Each space shall measure 9' x 20' and shall not interfere with other required off-street parking. (Ord. 5037, 1990).

18.25.080 Minimum Improvement and Maintenance Standards. A. All new or renovated parking lots shall be hard surfaced with concrete or asphalt and said surfacing shall meet the minimum specifications set forth, except that, upon written permission of the Commission, this requirement can be waived temporarily or permanently provided that the reasons for approving such a waiver are specified in writing.

1. Temporary waivers may be allowed by the commission where it finds that future development or change in use of the property would remove or change the parking area planned for paving.

2. Permanent waivers may be allowed by the commission where it finds that the limited use of the parking area does not warrant the need for a hard surface, the parking area is not required parking or is a storage yard area, or where other existing parking in the vicinity is not hard surfaced and requiring such a hard surface for the property in question would result in a hardship.

B. Adequate provisions shall be made for the disposal of storm water from the lot. The city engineer shall approve plans which show such water shall not flow onto adjoining property or adjacent sidewalks in a quantity or manner that would be dangerous or detrimental thereto, or dangerous or inconvenient to persons using the sidewalk.

C. A structurally sound abutment, including but not limited to bumper blocks, continuous curb or a retaining wall, shall be installed around each side of the parking lot. An adequate retaining wall shall be constructed wherever necessary to prevent the washing of soil to and from adjoining property.

D. An opaque fence, wall, berm, or landscaping 6 feet in height and of a character necessary for adequate screening of the parking lot from adjacent residentially used property shall be provided. Where the residential used property is across public right-of-way from the parking lot, screening 2 to 3 feet in height must be provided in all cases except when the right-of-way is an officially designated arterial street.

E. The parking spaces and their locations, and the locations and widths of entrances and exits to and from any parking lot or parking ramp shall be designed to provide appropriate circulation of traffic within the parking area and onto the street.

F. The location of each parking space and the location and direction of movement along the driveways providing access thereto shall be indicated by painting upon the surface, by raised directional signs or by markers or other similar measures placed in the surfacing of any parking lot which is greater than 5 stalls in size.

G. Any parking lot or ramp shall be adequately maintained, keeping it as free as possible from snow and ice. All signs, markers or painting or any other methods used to indicate direction of traffic movement and location of parking spaces shall be maintained in a neat and legible condition. Walls, trees, and shrubbery, as

well as the surface of the parking lot or ramp, shall be maintained in a good condition throughout its use for parking purposes.

H. Handicap parking stalls will be required and signed as per state building code standards. (Ord. 5037, 1990).

Chapter 18.30

ACCESSORY USES

Sections:

18.30.010 Purpose.
18.30.020 Determination.
18.30.030 One- and Two-Family Dwelling Accessory Building Standards.
18.30.040 Specific Standards.

18.30.010 Purpose. An accessory use is a building, structure or use which is allowed in addition to principal uses if customarily accessory to and incidental to the conduct of the principal use. Such building or structure shall be built upon, and the use conducted upon, the same lot as the principal use. (Ord. 5037, 1990).

18.30.020 Determination. A. The zoning administrator shall make the initial determination as to whether a building, structure or use is accessory to a principal use, and shall issue a certificate of zoning compliance for those which are determined to be accessory and which comply with the provisions of this title.

B. The accessory use determination shall be based upon the relationship of the building, structure or use to the principal use. An accessory use shall be habitually or commonly established as reasonably incidental to the principal use and located and conducted on the same lot as the principal use. In determining whether a use is accessory, the following factors shall be used:

- the size of the lot in question;
- the nature of the principal use;
- the use made of adjacent lots;
- the actual incidence of similar use in the area; and
- the potential for adverse impact on adjacent property.

C. The zoning administrator shall apply the standards set forth in subsection 18.30.040, where applicable, in the review procedures. (Ord. 5037, 1990).

18.30.030 One- and Two-Family Dwelling Accessory Building Standards. The provisions of this section shall apply to all one- and two-family dwelling residential accessory buildings.

A. An accessory building may be erected if separated from the principal building on the lot by 10 feet or as provided in the Wisconsin uniform dwelling code.

B. No accessory building shall be erected in any required yard other than the rear yard, except an accessory building may be located between the front and rear building lines subject to the side yard setback requirements of the principal building and all other dimensional standards of the district in which it is located.

C. The height of an accessory building shall not exceed 15 feet measured from the grade to the top of the building.

D. If located in the rear yard, detached accessory buildings shall be subject to the following requirements:

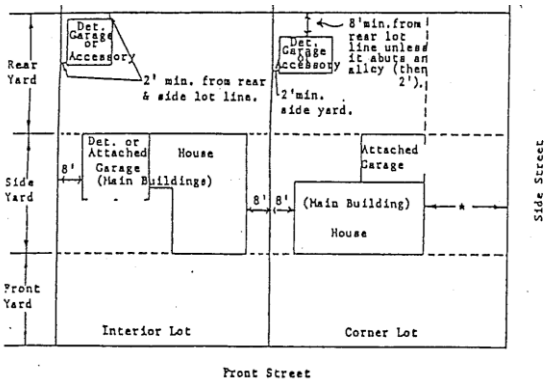

1. The setbacks from all lot lines shall be at least 2 feet provided the building is at least 10 feet from the main building on an adjacent lot.

2. All other setbacks pertaining to side streets on corner lots or rear streets on double-frontage lots shall be complied with.

3. The aggregate area of accessory buildings in the required rear yard area shall not exceed 35 percent of the required rear yard area.

4. Any addition to a main building which would cause part of an existing accessory building to be in a side yard shall not cause such accessory building to be nonconforming if its setback is less than that required of the main building, provided all other provisions of this title are met (see sketch). (Ord. 5037, 1990).

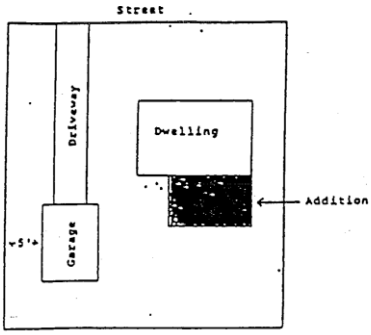

<u>18.30.040 Specific Standards</u>. The following specific standards shall apply to the specific accessory use as listed.

A. <u>Accessory Dwelling Units, Detached</u>. 1. Are allowed only if for use by persons regularly employed on the premise and their immediate family.

2. Are allowed if appurtenant to a principal agricultural use.

B. <u>Agricultural Uses</u>. 1. Buildings or structures used for the shelter or feeding of livestock shall be located not less than 200 feet from any adjoining lot in a residential district.

2. Allowed only in the R-1A district.

C. <u>Antennas, Private</u>. 1. The purpose of the provisions is to protect the community's health, safety and aesthetic values by reducing the visual impact of antennas due to their height and obstructive appearance. The City will regulate the height and location of antennas to minimize their visual impact on neighborhoods and the natural environment. This purpose will accommodate the federal communication commission rules which allow reasonable reception of antenna delivered signals.

2. Except as provided in section 18.35.050, only one private antenna support structure shall be allowed on a residential lot and shall not exceed, excluding mounting mast, 75 feet in height.

3. Antenna support structures detached from the principal building on the lot shall only be located in a rear yard and shall be setback from all property lines one-third the height of such structure; except as provided in section 18.35.050. All guy wires or other supports shall be setback as required for accessory buildings.

4. Electrical installations with an antenna shall be properly grounded and in accordance with the city electrical code and the cable used to conduct current or signals from the station to the building shall be buried;

5. Federal communication commission standards shall apply for interference with radio and television reception on adjacent properties;

6. An installation permit for an antenna from the building inspector shall be obtained at a fee as stated in the City of Eau Claire Fees and Licenses Schedule.

D. <u>Fences</u>. 1. In a rear yard or a side yard adjacent to a street behind the rear wall of the principal building, the maximum height of a fence shall be 6 feet.

2. In a side yard of an interior lot, the maximum height of a fence shall be 6 feet.

3. In a front yard or a side yard adjacent to a street in front of the rear wall of the principal building, the maximum height of a fence shall be 4 feet.

4. On corner lots, within 20 feet of the lot corner adjacent the street intersection, no fence shall exceed 3 feet in height above the curb level directly opposite. Chainlink fences with a mesh of 2 inches or more may be permitted within such area to a maximum height of 4 feet.

5. Within 5 feet of any driveway access to a street or alley no fence shall exceed 3 feet in height, except chainlink fences with a mesh of 2 inches or more.

6. When fencing height requirements for one lot are more restrictive than such requirements for an abutting lot with the same lot line, the more restrictive of the two requirements shall apply for that common lot line and for any front yard or side yard adjacent a street for both lots.

7. All fences shall be constructed of appropriate materials manufactured for such purpose and shall be maintained in a condition of good repair.

8. Fences in commercial or industrial districts may exceed the height requirements stated herein, if required for screening between districts or for screening of storage yards or similar exterior activities. Such fences shall be approved by the department or as part of a site plan.

9. Temporary fences such as snow fences or others of similar materials may only be allowed with approval of the department for a period of time not to exceed 6 months.

10. Barb wire fence shall not be allowed except for tops of security fences at heights greater than 6 feet for industrial and commercial uses or for agricultural purposes.

11. A wood or screening fence shall be installed in such a manner so that it has a finished surface that faces the exterior of the lot upon which the fence is located. In this paragraph, "finished surface" means that side of a fence which does not contain any exposed supporting posts or framing members; provided that, in the case of a double-sided fence, where an equal amount of supporting posts and framing members are visible on both sides of the fence, each side shall be considered to be a "finished surface".

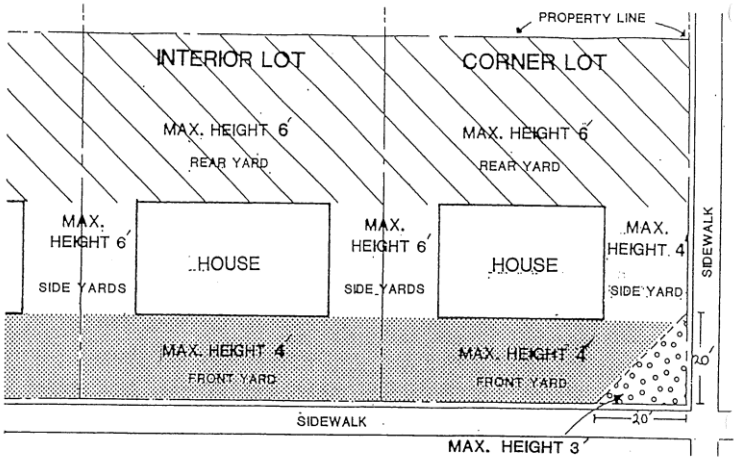

E. Garages, private. 1. One private garage, attached or detached, or combination thereof, shall be permitted as an accessory use on any lot in a residential district. No more than 4 parking stalls shall be permitted within any garage or for all garages in combination without approval of a conditional use permit from the commission. Under this subsection, a parking stall shall not exceed 250 square feet of garage area, and shall have reasonable vehicular access.

2. Any storage building having a floor area in excess of 200 square feet shall be deemed to be a private garage under this subsection.

3. No private garage on a lot shall exceed 1,000 square feet in floor area (except as provided in subsection 6 hereof), and no combination of attached and detached private garages on a lot shall exceed 1,500 square feet in floor area without approval of a conditional use permit from the commission.

4. No detached private garage shall exceed 18 feet in height above the existing grade of the lot without approval of a conditional use permit from the commission.

5. No part of the wall of a private garage which contains a vehicle entry door shall be located within 15 feet of a street or alley.

6. As an accessory use, a private garage on a lot may exceed 1,000 square feet in floor area by 10 square feet for every 1 foot of additional setback the structure is from the required setback for principal structures on the lot, up to 1,500 square feet.

7. A second detached accessory garage may be allowed with approval of a conditional use permit by the commission, provided that the lot for such request is at least 1 acre.

F. Horses. Horses are allowed for private use only within the R-1A District under the following standards:

1. The lot area shall not be less than one-half acre.

2. Adequate area for pasture shall be provided within a reasonable distance.

3. Overgrazing of a lot causing erosion or exposed soils shall not be allowed.

4. Accessory buildings which quarter horses shall be setback from any adjacent lot in a residential district a minimum of 25 feet from any side yard lot line and 10 feet from any rear yard lot line.

G. Reverse Vending Machine. A reverse vending machine may be permitted in all commercial and industrial districts provided that they comply with the following standards:

1. Shall be established in conjunction with a commercial or industrial use or community service facility which is allowed within the zoning district;

2. Shall be located within 30 feet of the entrance to the principle structure and shall not obstruct pedestrian or vehicular circulation;

3. Shall not occupy parking spaces required by the principle use;

4. Shall occupy no more than 50 square feet of floor space per installation, including any protective enclosure, and shall be no more than 8 feet in height;

5. Shall be constructed and maintained with durable waterproof and rustproof material;

6. Shall be clearly marked to identify the type of material to be deposited, operating instructions, and the identity and phone number of the operator or responsible person to call if the machine is inoperative;

7. Shall have a sign area of a maximum of 4 square feet per machine, exclusive of operating instructions;

8. Shall be maintained in a clean, litter-free condition on a daily basis;

9. Operating hours shall be at least the operating hours of the principle use;

10. Shall be illuminated to ensure comfortable and safe operation if operating hours are between dusk and dawn.

H. Swimming Pools. All provisions relating to swimming pools of chapter 16.04 shall be complied with.

1. Swimming pools are allowed only in a rear yard or interior side yard and must meet all required setbacks for detached accessory buildings.

I. Satellite Dishes, Private. 1. The purpose of these provisions is to protect the community's health, safety and aesthetic values by reducing the visual impact of satellite dishes due to their large bulk and obstructive appearance when compared to other antenna facilities. The city will regulate the size, height and location of satellite dishes to minimize their visual impact on neighborhoods and the natural environment. This purpose will accommodate federal communication commission rules which allow reasonable reception of antenna or satellite delivered signals.

2. On a residential lot, a ground mounted satellite dish is allowed as an accessory use subject to the following standards:

a. Only one such dish is allowed per lot;

b. Such dish shall not exceed 12' in diameter and 15' in height;

c. Such dish shall be located in a rear yard and meet all setback requirements of accessory building;

d. An installation permit for accessory satellite dishes from the building inspector shall be obtained at a fee as stated in the City of Eau Claire Fees and Licenses Schedule.

3. On a residential lot, a roof mounted satellite dish is allowed as an accessory use subject to the following standards:

a. Only one such dish is allowed per lot;

b. Such dish shall not exceed 3' in diameter and the height limit of the district in which it is located.

4. In the event that usable satellite signals cannot be received by locating the dish in accordance with paragraphs 2. and 3. above, an administrative permit may be obtained for a fee as stated in the City of Eau Claire Fees and Licenses Schedule to locate the dish subject to the following standards:

a. A ground mounted satellite dish may be located in an interior side yard subject to the setback requirements for accessory buildings;

b. A ground mounted satellite dish may be an additional 10' in height above the accessory use standards in a rear yard;

c. A roof mounted satellite dish may be up to 7' in diameter;

d. The zoning administrator, in allowing these additional standards, shall determine that a usable satellite signal cannot be received from a satellite dish located in conformance with the accessory use standards. Usable satellite signals are satellite signals from all major communications satellites that, when viewed on a conventional television set, are at least equal in picture quality to those received from local commercial television stations or by way of cable television.

5. In the event that usable satellite signals cannot be received by locating the satellite dish in compliance with paragraphs 2., 3. or 4., the plan commission may issue a conditional use permit to locate the dish in other locations on the lot. In reviewing such permit requests, the commission shall use the general provisions of section 18.35.040.

6. All satellite dishes shall meet a minimum wind-load design of 30 lbs./square foot.

7. No advertising message shall be allowed on any satellite dish or its framework.

8. Portable or trailer-mounted satellite dishes shall only be allowed for on-site testing and demonstrations within a 48 hour time limit.

9. Electrical installations with all satellite dishes shall be properly grounded and in accordance with the city electrical code and the cable used to conduct current or signals from the ground mounted station to the building shall be buried.

10. Federal communication commission standards shall apply for interference with radio and television reception on adjacent properties.

11. Abandoned, unmaintained or unsafe satellite dishes shall be moved from a property upon notice from the zoning administrator.

J. Solar Arrays. That are accessory and incidental and designed primarily for serving on-site needs or a use that is related to the principal use of the property.

1. A solar array shall follow building setback and height requirements for accessory structures within the zoning district it is proposed.

2. Accessory solar arrays have no size limits except that in residential zones for buildings with 4 dwelling units or less, the maximum size is 1,000 square feet. Larger arrays in these districts may be allowed by conditional use permit.

3. In all zoning districts accessory solar arrays exceeding height standards may be allowed by conditional use permit under provisions listed in Chapter 18.35. (Ord. 7212 §7, 2016; Ord. 6672 §1, 2006; Ord. 6363 §38, 2002; Ord. 5427 §§1, 3, 1994; Ord. 5153 §1, 1991; Ord. 5121 §2, 1991; Ord. 5098, 1990; Ord 5037, 1990).

Chapter 18.35

CONDITIONAL USES

Sections:

18.35.010 Purpose.
18.35.020 Procedure.
18.35.030 Authority to Impose Conditions.
18.35.040 General Provisions.
18.35.050 Specific Provisions.

18.35.010 Purpose. The conditional use procedure is established to provide an appropriate review of certain uses herein listed which may be detrimental to adjacent property, the general neighborhood or the comprehensive plan. (Ord. 5037, 1990).

18.35.020 Procedure. A. Prior to the issuance of a conditional use permit for the establishment or construction of a conditional use, the applicant shall obtain approval from the commission in accordance with the procedures and rules set forth in this chapter.

B. An application for a conditional use along with a fee as stated in the City of Eau Claire Fees and Licenses Schedule shall be submitted with forms and other required items to the department. A list of the required items to be submitted for a conditional use is available at the main counter of such department, located in City Hall, 203 S. Farwell Street, Eau Claire. Applicant is encouraged to discuss with the responsible staff persons the suitability of the conditional use.

C. The application shall be scheduled for public hearing before the commission in accordance with the procedures established in Section 62.23 of the Wisconsin Statutes. Notice shall be provided to all persons within 300 feet or, in the case of an application involving a heavy manufacturing and production use as defined by Section 18.06.040, 500 feet of the property and to the city newspaper. A Zoning Hearing Notice sign shall be posted on the property by the department.

D. The commission shall review the application in accordance with the general provisions of section 18.35.040 and the applicable specific provisions of section 18.35.050. The Commission shall approve, approve with conditions, or deny the application in accordance with such provisions.

E. A conditional use shall lapse and become void one year after approval by the commission unless substantial construction or use of the permit has actually occurred. The commission may extend this time as a condition of approval for the application or applicant may request extension of this time from the commission prior to the one year expiration date. The commission, in reviewing such time extensions, shall consider any changes in city policy or regulations, or in conditions of the site or area that may warrant additional conditions of approval or denial of the time extension. Time extensions shall be on a year-by-year basis.

F. If the terms of a conditional use have been violated, or the use is substantially detrimental to persons or property in the neighborhood, the commission shall hold a hearing on the revocation of the conditional use. Such hearing shall be preceded by due notice to the permittee and shall be held in accordance with Section 62.23 of the Wisconsin Statutes. If the commission finds the terms of the conditional use have been violated or the use is detrimental to the area, it may revoke, modify or leave such conditional use unchanged.

G. Unless otherwise specified in the conditions of approval, a conditional use issued under this section shall remain in effect as long as the authorized use continues. Any use which is discontinued for 12

consecutive months shall be deemed to be abandoned. Prior to the re-establishment of an abandoned use, a new conditional use shall be obtained under the terms of this chapter.

H. No application for a conditional use permit which has been denied wholly or in part by the commission shall be resubmitted for a period of one year from the date of said denial, except on the grounds of new evidence or proof of change of conditions is found to be valid by the commission. (Ord. 7051 §1, 2013; Ord. 6363 §38, 2002; Ord. 5037, 1990).

18.35.030 Authority to Impose Conditions. The commission, in order to achieve the provisions of this chapter, may attach certain conditions to the conditional use, including:

A. Limiting the manner in which the use is conducted, including restricting the time an activity may take place and restraints to minimize such environmental effects as noise, vibration, air pollution, glare and odor.

B. Establishing a special yard or other open space or lot area or dimension.

C. Limiting the height, size or location of a building or other structure.

D. Designating the size, number, location or nature of vehicle access points.

E. Increasing the amount of street dedication, roadway width, or improvements within the street right-of-way.

F. Designating the size, location, screening, drainage, surfacing or other improvement of a parking or truck loading area.

G. Limiting or otherwise designating the number, size, location, height or lighting of signs.

H. Limiting the location and intensity of outdoor lighting or requiring its shielding.

I. Requiring diking, screening, landscaping or another facility to protect adjacent or nearby property and designating standards for installation or maintenance of the facility.

J. Designating the size, height, location or materials for a fence.

K. Protecting existing trees, vegetation, water resources, wildlife habitat or other significant natural resources.

L. Specifying other conditions to permit development of the city in conformity with the intent and purpose of the comprehensive plan. (Ord. 5037, 1990).

18.35.040 General Provisions. No application for a conditional use shall be granted by the commission unless the commission finds all of the following general provisions, applicable to all conditional uses, are present:

A. That the establishment, maintenance, or operation of the conditional use will not be materially detrimental to or endanger the public health, safety, morals, or general welfare;

B. That the uses, values and enjoyment of other property in the neighborhood for purposes already permitted shall be in no foreseeable manner substantially impaired or diminished by the establishment, maintenance or operation of the conditional use;

C. That the establishment of the conditional use will not significantly impede the normal and orderly development and improvement of the surrounding property for uses permitted in the district;

D. That adequate utilities, access road, off-street parking, drainage and other necessary site improvements have been or are being provided;

E. That adequate measures have been or will be taken to provide ingress and egress so designed as to minimize traffic congestion and hazard in the public streets;

F. That the conditional use shall conform to all applicable regulations of the district in which it is located;

G. That the proposed use is in conformance with the purpose of the zoning district in which it is located and complies with the provisions and policies of the comprehensive plan; and

H. That the specific provisions applicable to the conditional use listed in this chapter are or will be satisfied. (Ord. 5037, 1990).

18.35.050 Specific Provisions. The following specific provisions, applicable to specific conditional uses as listed, shall be considered by the Commission, in addition to provisions included under section 18.35.040:

A. Agricultural Uses, Commercial. Districts permitted: R-1A. Buildings or structures used for the shelter or feeding of livestock shall be located not less than 200 feet from any adjoining lot in a residential district.

B. Antennas, Private (in excess of accessory use standards). Districts permitted: all residential districts. Private antennas in excess of accessory use standards for: number allowed per residential lot, height allowed for antenna support structures, or setbacks required based on the height of the antenna support structure, may be allowed by the commission subject to the general provision herein, all other related provisions of 18.30.040 and the related provision of the federal communications commission.

C. Bed and Breakfast House. Districts allowed: all residential. Provisions:

1. These provisions are intended to allow alternative uses for older or larger dwellings which have a unique character or historic value to the community, as a means of preserving or enhancing such structures.

2. No additions to such dwellings shall be allowed unless approved by the commission.

3. The appearance of the dwelling shall be maintained or restored to its original condition, except for changes required by building, housing or other codes or as determined by the commission.

4. Parking areas and trash storage areas shall be screened from view. Other screening may be required for the property by the Commission to protect adjacent residential uses.

5. Parking shall be provided at 1 stall per guest room plus 2 stalls.

6. The number of guest rooms shall not exceed 9 and the Commission may restrict this number to 5 or fewer in areas which are primarily single-family neighborhoods or which do not have direct access to collector or arterial streets.

D. Repealed by ord. 6683.

E. Conversion of One-Family Dwelling to Duplex. Districts allowed: R-2. Provisions:

1. The appearance of the dwelling, including but not limited to facades and roof lines, shall be maintained in or restored to its original condition, except as required by building, housing or other codes or as approved by the commission.

2. No increase in the finished floor area of any dwelling granted a conditional use under this section shall be made except by approval of the commission.

3. Screening of trash areas, appropriate parking areas and completion of other site improvements shall be provided.

4. Minimum lot area shall be 10,000 square feet, except the commission may reduce such lot area to 8,000 square feet upon finding:

a) Compliance with the policies of the applicable neighborhood plan or area plan;

b) The dwelling shall have a minimum of 2,000 square feet of finished floor area, excluding basement, as of January 1, 1980;

c) Compatibility with adjacent land uses, including consideration of other two-family dwellings or multi-family dwellings immediately adjacent to the dwelling proposed for conversion;

d) The lot area for the dwelling proposed for conversion or the size of such dwelling does not apply generally to other lots or dwellings in the vicinity. The lot or dwelling must demonstrate an unusual circumstance, which justifies the conversion, when compared to other lots or dwellings in the vicinity.

F. Conversion of One- or Two-Family Dwelling to 3-6 Unit Dwelling. Districts allowed: R-2. Provisions:

1. Structures shown to have substantial economic unsuitability for one-and two-family dwelling use may be considered for approval for conversion to multiple-family dwellings. It is the intent of this section that any increase in density, where approved, shall be mitigated to the extent possible by building and site design improvement, and justified by demonstrated benefits to the neighborhood. No conditional use permit may be granted for such conversions unless the commission finds all of the following standards are met:

a) The following limits in number of units shall apply:

# of Units/ Structure	Required Square Footage of Finished Floor Area*	Required Square Footage of Lot Area
3	2,500	10,000
4	3,300	13,000
5	4,100	16,000
6	4,900	19,000

More than 6 units are not allowed.

b) That no increase in the finished floor area of any structure granted a conditional use under this section shall be made after December 1, 1982, except by approval of the Commission.

c) That the structure was constructed before January 1, 1940.

d) That the structure is designated as a local landmark.

e) That the appearance of the dwelling, including but not limited to facades and roof lines, as viewed from public streets, will be maintained in or restored to its original condition as determined by the Landmarks Commission.

* Finished floor area shall exclude basement, porches and attic areas of structure and any floor area which cannot be legally occupied or used as part of the multiple family dwelling.

f) Evidence that the structure cannot reasonably be continued to be used as a single-family dwelling or two-family dwelling, including evidence of reasonable, unsuccessful efforts in good faith to find and attract a buyer willing to preserve the structure as a one- or two-family dwelling. It is the intent of this

criterion that such a reasonable effort to find and attract a buyer may involve substantial reduction in the selling price of the structure.

g) Parking areas and trash storage areas shall be screened from adjoining residences. The Commission may also require other screening as necessary to protect adjacent properties.

h) Approval of a site plan by the commission.

G. Conversion of One-Family Dwelling to Duplex on Lots 6,000-8,000 Square Feet in Size. Districts allowed: RM. Provisions:

1. The dwelling shall have a minimum of 2,000 square feet of finished floor area, excluding basement, as of January 1, 1980;

2. The appearance of the dwelling, including but not limited to facades and roof lines, shall be maintained in or restored to its original condition, except as required by building, housing or other codes or as approved by the Commission;

3. No increase in the finished floor area of any dwelling granted a conditional use under this section shall be made except by approval of the commission;

4. Screening of trash areas, appropriate parking areas and completion of other site improvements shall be provided;

5. Compliance with the policies of the applicable neighborhood plan or area plan shall be required;

6. Compatibility with adjacent land uses shall be required, including consideration of other two-family dwellings or multi-family dwellings immediately adjacent to the dwelling proposed for conversion;

7. The lot area for the dwelling proposed for conversion or the size of such dwelling shall not apply generally to other lots or dwellings in the vicinity. The lot or dwelling must demonstrate an unusual circumstance, which justifies the conversion, when compared to other lots or dwellings in the vicinity.

H. Damaged Landmarked Properties. Districts allowed: all residential districts. Provisions:

1. The purpose of these provisions is to allow and encourage the repair and preservation of landmarked residential property substantially damaged by fire, natural disaster, neglect, or third party action while maintaining the original structure to the maximum extent possible, but not the replacement of the structure, in furtherance of the purpose of this Title and Chapter 2.65.

2. These provisions shall only apply to individual landmarked properties and properties within a landmarked district that are pivotal or contributing, but shall not apply to non-contributing properties as defined in Chapter 2.65.

3. Applicant shall apply for and must receive Landmarks Commission approval of the repairs to the damaged property pursuant to Chapter 2.65 either prior to application to the Commission or as a condition of the grant of the conditional use.

4. Applicant shall not raze the structure nor deconstruct any more of the structure than is reasonably necessary to allow for the overall repair.

5. Applicant may not extend or intensify any nonconforming use through the repair and reuse of the damaged property, but may, or, if made a condition by the Commission, shall change the use to one that is more restrictive based on the provisions of Section 18.40.020 E.

I. Day Care Centers. Districts allowed: R-1A, R-1, R-2, RM, R-3, R-4, C-1, C-2, C-3, CBD. Provisions:

1. Applicant shall secure and maintain a child care license from the State of Wisconsin.

2. All structures and facilities shall be designed and used in such manner as not to be detrimental to adjacent and surrounding property nor to the safety and welfare of the children. The commission may require additional screening, setbacks or other design considerations to prevent adverse impacts between the day care center and adjacent properties.

3. Minimum parking shall be one space/staff person, two space minimum.

4. Applicant shall provide a child pick-up area located off of public streets with an adequate vehicle turn-around area.

5. Lot size shall be adequate to provide for parking, child pick-up area, vehicle turn-around area, play area, screening and setbacks.

J. Dwelling Units in Commercial Districts. Districts allowed: C-1A, C-1, C-2, CBD. Provisions:

1. Dwelling units in a C-1A, C-1 or C-2 district are restricted to a total gross floor area of 5,000 square feet above the ground floor of a commercial building and also to the rear of such buildings, provided that such ground floor dwelling units shall not be closer than 28 feet to any public street.

2. Dwelling units in the CBD are allowed on the ground floor in newly constructed buildings, provided that all applicable yard setback regulations required for the R-4 district are met.

3. Dwelling units are a permitted use above the ground floor of commercial buildings in the CBD with no setback restrictions.

4. In the C-1A, C-1 and C-2 districts, there shall be provided a usable open space of not less than 100 square feet for each bedroom in a dwelling unit.

5. Minimum lot size shall be 6,000 square feet and minimum lot width shall be 60 feet for buildings containing dwelling units in a C-1A, C-1 or C-2 district.

6. A side yard setback of 10 feet shall be provided for any building containing a dwelling unit in a C-1A, C-1 or C-2 district.

7. A rear yard setback of 20 feet shall be provided for any building containing a dwelling unit in a C-1A, C-1 or C-2 district.

K. Garage, Private. Districts allowed: all residential. Provisions:

1. Any attached or detached private garage, on a lot, having a floor area in excess of the accessory use standards for private garages in Chapter 18.30, requires a conditional use permit.

2. Any combination of attached or detached garages, on a lot, having in excess of 1,500 square feet of floor area or more than 4 parking stalls, requires a conditional use permit.

3. Any detached garage in excess of 18 feet in height above the existing grade of the lot requires a conditional use permit.

4. A second detached garage on a lot requires a conditional use permit, provided that the lot for such request shall be at least 1 acre.

5. The commission, in considering a request under this subsection, shall apply the provisions for determination of accessory uses under Chapter 18.30 and the general provisions of this chapter.

L. Golf Courses. Districts allowed: all residential. Provisions:

1. Shall not include commercially operated miniature golf courses or golf driving ranges unless clearly accessory to the golf course.

2. Clubhouses and maintenance buildings shall be located not less than 200 feet from any adjacent lot in an adjoining residential district.

3. A minimum setback of 100 feet shall be provided from any street for any main or accessory building.

4. These provisions shall not require any change in an existing clubhouse or maintenance building for which a building permit has been issued in the event of a change in the boundary of an adjacent residential district.

5. Parking shall be provided at 4 stalls per hole.

M. Home Occupation. Districts allowed: R-1A, R-1, R-2, RM, R-3, R-4. Provisions:

1. That except for articles produced on the premises, no stock in trade will be displayed or sold on the premises.

2. That the home occupation will be conducted entirely within the enclosed living area of the dwelling unit or the enclosed portion of an accessory building.

3. That no person other than members of the immediate family occupying such dwelling shall be employed in the home occupation.

4. That the establishment, conduct and total floor area devoted to the home occupation will not change the principal, residential character of the use and appearance of the dwelling unit and accessory building involved.

5. That there will be only 1 sign, non-illuminated, not exceeding one square foot in area, containing only the name of the owner(s) and home occupation, mounted flat against the wall of the dwelling or accessory building or visible through a window.

6. That there will be no outside storage or exterior evidence of the conduct of a home occupation except as otherwise permitted by the commission upon such conditions as the commission deems necessary.

7. That the home occupation will not cause a public nuisance.

8. That the conduct of the home occupation, including but not limited to the storage of goods and equipment, shall not reduce or render unusable areas provided for the required off-street parking.

9. That no more than one vehicle will be used in the home occupation, said vehicle being no larger than a three-quarter ton pick-up or panel truck, and that said vehicle will be parked off-street.

10. That any parking demand generated by the home occupation will not cause undue interference with the movement of traffic or parking normally expected in the neighborhood.

11. That no electrical, mechanical or other equipment or processes will be used in the home occupation which creates visible or audible interference in radio or television receivers or causes fluctuations in line voltage outside the dwelling unit or accessory buildings, or which creates an unreasonable level of noise, dust, heat, vibration, odor or smoke, or which would create a fire hazard.

12. That the building used for the home occupation will be in full compliance with all applicable codes.

13. That the home occupation does not involve group meetings or a private school whose attendance exceeds five persons at any given time, except as otherwise permitted by the commission upon such conditions as the commission deems necessary.

14. That the proposed home occupation is not among the following prohibited uses:

a) antique shops;
b) dry cleaning establishments;
c) furniture refinishing using a manufacturing or chemical dripping process;
d) gift shops;

e) ice cream shops;

f) repair or painting of motor vehicles, including body work;

g) restaurants;

h) service and repair shops, except for the service and repair of small electrical appliances, typewriters, cameras, lawn mowers and similar small equipment;

i) veterinary clinic.

N. Machinery and Equipment Sales and Service. District allowed: C-3.

1. Machinery and equipment sold or serviced shall be limited to that weighing less than 5 tons.
2. Display lots shall be paved.
3. Outdoor servicing shall not be allowed.

O. Model Home. Districts allowed: all residential. Provisions: The use of the dwelling as a model home shall not exceed a time period of one year.

P. Pigeon Lofts. In the R-1A, R-1 and R-2 districts, a conditional use permit is required if the requirements of s. 6.16.060 G., H., I. or J. are exceeded or modified. In the R-M, R-3 and R-4 districts, the conditional use permit may allow the requirements of s. 6.16.060 G., H., I. or J. to be exceeded or modified.

Q. Recycling Facilities. Districts allowed: all industrial and commercial. A conditional use permit is required for large collection facilities in a C-3 district and for processing facilities in an I-1 district. Such facilities shall comply with all applicable standards of Section 18.20.210.

R. Retail Building Material or Lumber Yard. District allowed: C-3. Provisions:

1. Outdoor storage yards shall not be allowed within 100 feet of a residential district.
2. Such yards shall be effectively screened from view on all sides with appropriate materials 6 to 8 feet in height.
3. The height of storage within such yards shall not exceed the height of the fence.

S. Wind Energy Conversion System. Districts allowed: all districts. Provisions:

1. Submit all information required on forms available at the department.
2. The height of the wind energy conversion system, including the rotor, shall not exceed the height limits for the district in which it is located nor shall the height exceed the distance of the base of such system to any lot line for the property.
3. The location of the system shall comply with all setbacks for the district in which it is located and shall not adversely impact adjacent land uses.
4. Appropriate maintenance and abandonment agreements shall be provided.
5. The relationship of the system to public utility structures shall be considered and adequate provisions for interconnection with, and parallel generation in connection with, the public electric utility shall be required where applicable.
6. Noise and electromagnetic interference created by the system shall not adversely impact surrounding uses.
7. The safety of the system, including, but not limited to, its structural integrity, sufficient overspeed control limiting the speed of blade rotation to below the design limits of the system, limitation on unauthorized access to the structure, height of rotor sweep from ground level, and appropriate protection from electrical hazard shall be ensured. One or more signs may be required to be installed at the base of the system warning of high voltage and including an emergency phone number and emergency shutdown procedure.
8. Compliance with all applicable city, state or federal safety, construction and electrical codes and other laws, rules and regulation containing requirements for wind energy conversion.
9. Liability insurance to be obtained and maintained in force covering the installation and operation of the wind energy conversion system, having a single limit coverage in the amount of at least $300,000.

T. Processing of Food-Related Products. Districts allowed: C-3, CBD. Provisions:

1. Firms shall be limited to start-up or small businesses with few employees, minimal equipment needed for operation, and minimal outdoor activities.
2. Parking shall be provided at 1 stall per employee, 1 stall per business vehicle at the site, and customer parking as needed.
3. Outdoor activities shall be limited to employee and customer parking, loading and unloading of products and supplies, and other activities which are not detrimental to surrounding properties as determined by the commission.
4. The commission may restrict such uses to a temporary time frame to limit the potential size of the business at such location.
5. The commission may limit the size and number of business vehicles at the site.
6. The processing of food-related products shall be limited to food for human consumption only, involving no raw product processing.
7. The commission shall take into consideration the distance the proposed use is from residential or certain commercial districts which may be impacted by such use and may place reasonable conditions on the use to limit its hours of operation or potential impacts from noise or odor.

U. Satellite Dishes, Private. (In excess of accessory use standards). Districts permitted: all residential districts. Private satellite dishes in excess of accessory use standards may be allowed by the commission subject to the general provisions herein, all other related provisions of s. 18.30.040, and other related provisions of the federal communications commission.

V. Christmas Tree Sales. Districts allowed: all residential. Provisions:

1. Such use shall only be allowed from November 15 through December 25.
2. Hours of operation shall be limited to 8:00 a.m. to 8:00 p.m.
3. Signs are restricted to 12 square feet, 6 feet in height, at a 10-foot setback.
4. Clean up of the site is required by December 27.
5. Parking for at least 4 vehicles will be provided on the site or be available on the street.
6. Outside lighting must be shielded to prevent glare on adjacent residential properties.

W. Public Utility Tower. Districts Allowed: all districts.

1. Purpose. In order to accommodate the communication needs of residents and businesses while protecting the public health, safety, and general welfare of the community, the council finds that these regulations are necessary in order to:

a. Facilitate the provision of wireless telecommunication services to the residents and businesses of the city;

b. Minimize adverse visual effects of public utility towers through careful design and siting standards;

c. Avoid potential damage to adjacent properties from tower failure through structural standards and setback requirements; and

d. Maximize the use of existing and approved public utility towers and buildings to accommodate new wireless telecommunication antennas in order to reduce the number of public utility towers needed to serve the community.

2. A proposal for a new public utility tower shall not be approved unless the telecommunications equipment planned for the proposed tower cannot be collocated on an existing or approved tower or building as provided by the applicant in a sworn statement required by section 66.0404(2)(b)6. of the Wisconsin Statutes, and any amendments thereto. Provision of a sworn statement shall not preclude the City hiring a 3rd party consultant to review the feasibility of collocation on an existing or approved tower or building, with all costs charged to the new public utility tower applicant, with the exclusion of travel expenses.

3. Any proposed public utility tower shall be designed structurally, electrically, and in all respects, to accommodate both the applicant's antennas and comparable antennas for at least two additional users if the tower is over 100 feet in height or for at least one additional user if the tower is 60 to 100 feet in height. Public utility towers shall be designed to allow for future rearrangement of antennas upon the tower and to accept antennas mounted at varying heights. It is the intent of this provision to maximize the number of antennas that can be added to a proposed public utility tower.

4. The use of guyed public utility towers is prohibited. Public utility towers shall be self-supporting without the use of wires, cables, beams, or other means. The design shall utilize an open framework or monopole configuration. A monopole tower is preferred over other self-supporting public utility towers. Permanent platforms or structures exclusive of antennas that serve to increase off-site visibility are prohibited.

5. The public utility tower shall be no more than 200 feet in height in any district, and height alone shall not be a reason to prohibit a public utility tower.

6. In residential districts, a public utility tower shall be set back from all property lines a distance equal to or greater than the height of the tower. In other districts, the location of the public utility tower shall comply with the minimum setback requirements of the district in which it is to be located. In non-residential districts, public utility towers located closer to a property line than a distance equal to the height of the public utility tower shall be designed and engineered to collapse progressively within the distance between the public utility tower and the property line. In all districts, if a public utility tower is designed to collapse within a smaller area than the setback distance would otherwise require, as stated in an engineering certification, such district-required setback distance shall not apply unless the engineering certification is flawed.

7. Public utility tower locations shall provide the maximum amount of screening possible for off-site views of the facility. Existing on-site vegetation shall be preserved to the maximum extent practicable around the base of the public utility tower.

8. The installation of the public utility tower and related structures shall be designed to be compatible with the underlying site plan. The base of the tower and any accessory structures shall be landscaped and screened where practical. Accessory structures shall be designed to be architecturally compatible with principal structures on and adjacent the public utility tower site.

9. The public utility tower shall be light blue, gray, or other colors that are demonstrated to minimize visibility. The use of mottling as a camouflage technique is encouraged. No advertising or identification visible off-site shall be placed on the public utility tower or antennas.

10. Public utility towers and their antennas shall not be lighted except as required by the Federal Aviation Administration or other authority.

11. The priority for locating antennas shall be in the following order of ranking (highest preference to lowest preference):

a. Existing structures;

b. Public lands and other parks where compatible surrounding uses;

c. Industrial areas, where compatible with surrounding uses;

d. Commercial areas where compatible with surrounding uses;

e. Residential areas and public parks where compatible with surrounding uses and only if such towers are uniquely designed to be consistent with other improvement on the site, typical to permitted uses in the zoning district and located no closer than 500 feet to an existing public utility tower. Examples of such unique towers would include steeples or bell towers for churches, light poles for athletic fields, light poles for parking lots, or similar camouflaging techniques.

12. Public utility towers and their antennas shall be certified by a qualified and licensed professional engineer to conform to the latest structural standards of the state building code and all other applicable standards. Metal public utility towers shall be constructed of, or treated with, a corrosive resistant material.

13. All obsolete or unused public utility towers and accompanying accessory facilities shall be removed by the owner within 12 months of the cessation of operations at the site unless a time extension is approved by the Commission. After the facilities are removed, the site shall be restored to its original or an improved state.

14. In addition to the submittal requirements required elsewhere in this code, applications for conditional use permits for public utility towers and their antennas shall be accompanied by the following information:

a. Written statements that the proposed public utility tower complies with regulations administered by the Federal Aviation Administration, Federal Communications Commission, and any appropriate state review authority, or that the public utility tower is exempt from those regulations;

b. A description of the public utility tower height and design, including a cross section and elevation;

c. A report that demonstrates the public utility tower's compliance with all applicable structural and electrical standards and codes;

d. A drawing which documents the height above grade for all potential mounting positions for co-located antennas and the minimum separation distances between antennas;

e. A description of the public utility tower's capacity, including the number and type of antennas that it can accommodate;

f. A report that documents the steps the applicant will take to avoid interference with established public safety communications; and

g. A letter of intent committing the public utility tower owner and his or her successors to allow the shared use of the public utility tower, as long as there is no negative structural impact upon the public utility tower, and there is no disruption to the service provided.

15. Within 90 days of receipt of a complete application, the City shall notify the applicant in writing of a final decision. If the application is denied, the City shall include with the written notification substantial evidence supporting the denial.

X. Catering Businesses in Churches. Districts allowed: all residential. Provisions:

1. The catering business shall operate from the kitchen of the church and shall be licensed by the city-county health department.

2. No stock in trade shall be displayed or sold on the premises, except for articles produced on the premises.

3. No more than 4 employees of the catering business shall be present on the premises.

4. No sign associated with the business shall be displayed on the premises.

5. No equipment, materials, or supplies associated with the business shall be stored outside.

6. Staff parking shall be provided on the premises.

7. Only one vehicle, no larger than a 3/4-ton pickup truck or panel truck, shall be allowed with the business, and such vehicle shall park off street.

8. The catering business shall not operate in a manner that constitutes a restaurant.

Y. Rooming Houses. Districts allowed: RM, R-3, R-4

Provisions:

1.The lot size shall be of sufficient size to provide required site improvements including parking on site and maintain green space consistent with surrounding development.

2. The size and height of the building shall be compatible with abutting and adjacent development. Larger or taller buildings shall have greater setbacks and additional buffering from smaller buildings.

3.The parking lots required for rooming houses shall be screened from abutting properties and shall be consistent in paved area with surrounding development.

Z. Solar Arrays or Solar Farms. Districts allowed: all districts. Provisions:

1. Solar farms are designed primarily for serving off-site power needs and are principal uses of the property requiring a conditional use permit. A solar farm shall follow building setback and height requirements for principal structures within the zoning district it is proposed.

2. An accessory solar array may be allowed in size over 1,000 square feet in residential zones for buildings with 4 dwelling units or less.

3. Height standards in all districts may be exceeded for both solar arrays and solar farms so long as the standards of this chapter are met.

4. Ground mounted solar arrays or solar farms considered by the Zoning Administrator to create impervious surface above lot restrictions for improved surfaces, shall only be conditionally approved if appropriate mitigation measures for storm water runoff can be demonstrated. (Ord. 7212 §8, 2016; Ord. 7185, 2016; Ord. 7156 §2, 2015; Ord. 6929 §2, 2010; Ord. 6754 §2, 2007; Ord. 6683 §3, 2006; Ord. 6672 §2, 2006; Ord. 5872 §6, 1998; Ord. 5454 §3, 1994; Ord. 5427 §§2, 4, 1994; Ord. 5207 §7, 1992; Ord. 5153 §2, 1991; Ord. 5152 §2, 1991; Ord. 5121 §3, 1991; Ord. 5037, 1990).

Chapter 18.40

NONCONFORMING USES, STRUCTURES AND LOTS

Sections:

18.40.010 Purpose.
18.40.020 Nonconforming Uses.
18.40.030 Nonconforming Structures.
18.40.040 Nonconforming Lots.
18.40.050 Applicability.
18.40.060 Grandfather Rights

18.40.010 Purpose. A. Within the districts established by this title or amendments hereto, there exist uses, structures or lots which were lawful prior to the adoption of this title but would be prohibited or more greatly restricted under the terms of this title. These uses, structures and lots are declared legal nonconformities as provided for in this chapter.

B. It is the intent of this chapter to permit lawful nonconformities until they are changed to conform with the provisions of this title, but not to encourage their continuation. Such uses, structures and lots are declared by this title to be incompatible with permitted uses, conforming structures and lots in the district in which they are located. (Ord. 5037, 1990).

18.40.020 Nonconforming Uses. A nonconforming use which existed at the time of adoption of this title, or amendments hereto, may be continued, but shall comply with the following provisions:

A. Only that portion of a structure, land or water in actual use may be continued to be used. The nonconforming use shall not be extended, enlarged, substituted, or moved in a manner to increase its nonconformity, except when required by law or order or to bring the use into conformity with the provisions of this title.

B. Enlargements or extensions designed exclusively to permit conformity by providing required off-street parking spaces on the same lot as the use to which such spaces are accessory, are not subject to the restrictions of subsection A.

C. If the nonconforming use has been discontinued for a period of 12 consecutive months, it shall not be resumed, and any future use of the structure, land or water shall conform to the provisions of this title.

D. The total structural repairs or alterations to a building or structure containing a nonconforming use shall not during its life exceed 50 percent of the fair market value of the building or structure unless the use of the building or structure is changed to a conforming use.

E. A nonconforming use may be changed to a use of the same or a more restrictive zoning classification, provided that such use shall not thereafter be changed to a use of a less restrictive classification. For the purpose of this section, uses in the following zoning districts are classified from the most restrictive to the least restrictive: R-1A, R-1, R-2, RM, R-3, R-4, C-1A, C-1 C-2, CBD, C-3, I-1, I-2. If such use is allowed in more than one district, the most restrictive district shall apply. (Ord. 5037, 1990).

18.40.030 Nonconforming structures. A nonconforming structure that existed at the time of adoption of this title or amendments thereto may be continued, but shall comply with the following provisions:

A. Ordinary maintenance and repair made to a nonconforming structure may be allowed as

determined by the zoning administrator. Ordinary maintenance and repair includes internal and external painting, decorating, paneling, and the repair or replacement (similar size) of doors, windows, nonbearing walls (not changing location or room arrangements), fixtures, heating components, wiring, plumbing, siding, roofing, and other nonstructural components. Ordinary maintenance and repair does not include any costs associated with the repair of a damaged structure.

B. Substantial improvements (repairs/alterations) within the footprint of the existing nonconforming structure may be allowed, provided that the total cost of such improvements shall not, during the life of the nonconforming structure, exceed 50% of the fair market value of the structure unless it is changed to be a conforming structure.

1. Substantial improvements mean any structural repair, reconstruction, modification, alteration, or improvement of a structure as determined by the zoning administrator. Substantial improvements also mean changes that affect room arrangement, light and ventilation, exiting, and fire protection. Replacing more than 25% of a building's interior wall and ceiling plaster, gypsum wallboard, or similar wall surfaces shall be considered substantial improvement.

2. A variance from this provision may be allowed by the zoning board of appeals based on the provisions of subsection H. herein and the procedures of chapter 18.55. An administrative variance may be allowed by the zoning administrator for substantial improvements that exceed the 50% standard to structures with "minor" nonconformities. A minor nonconformity exists when the existing nonconforming standard is only 10% or less of the required standard of this title. The zoning administrator, in considering an administrative variance, shall base such decision on the provisions of subsection H. and follow the procedures of subsection J. herein.

C. Additions to a nonconforming structure that conform to all standards of this title may be allowed, provided the cost of these additions and all other additions and substantial improvements shall not, during the life of such nonconforming structure, exceed 50% of the fair market value of the nonconforming structure. A variance from this provision may be allowed by the zoning board of appeals based on the provisions of subsections H. and I. herein and the procedures of chapter 18.55. An administrative variance may be allowed by the zoning administrator for additions to structures with "minor" nonconformities. A minor nonconformity exists when the existing structure has an existing nonconformity that is 10% or less of the required standard of this title. The zoning administrator, in considering an administrative variance, shall base such decision on the provisions of subsections H. and I. and follow the procedures of subsection J. herein.

D. Additions to a nonconforming structure that do not conform to the standards of this title require a variance from the zoning board of appeals. The board shall base its review of such variances on the provisions of subsections H. and I. herein and the procedures of section 18.55.040.

1. It is the intent of this provision to allow consideration of additions to nonconforming structures that do not further encroach into the established nonconforming setback of the structure. Additions that further encroach beyond the established nonconforming setback shall be reviewed based on the provisions of section 18.55.050 B.

2. An administrative variance may be allowed by the zoning administrator for additions to structures with "minor" nonconformities as defined herein. Up to an additional 3 feet of setback closer from required front or side yards on corner lots or rear yards on interior lots only is allowed. Such addition shall not further encroach into the established nonconforming front corner, side, or rear yard setbacks of the existing nonconforming structure (illustrated below).

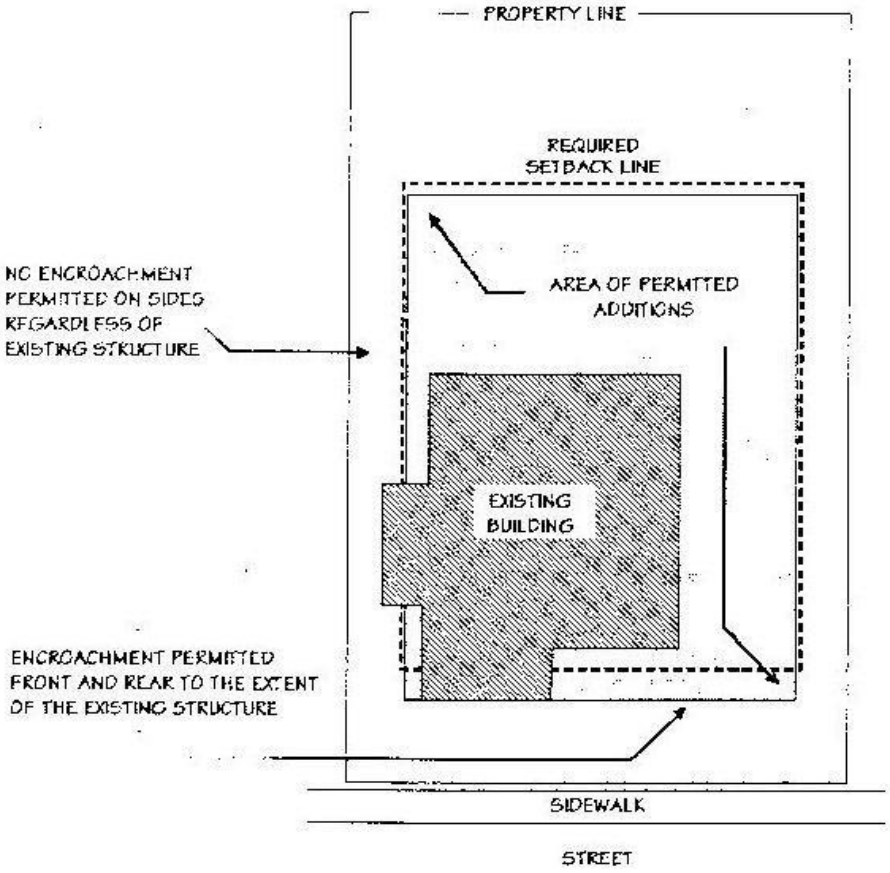

3. The zoning administrator, in considering an administrative variance, shall base such decision on the provisions of subsections H. and I., and follow the procedures of subsection J. herein.

E. Additions to conforming structures that do not conform to the standards of this title require a variance from the zoning board of appeals. The board shall base its review of such variances on the provisions of section 18.55.050 B. and on the procedures of section 18.55.040.

F. Repair of a nonconforming structure that is damaged to the extent of less than 50% of the fair market value of the structure may be repaired, provided that the nonconforming structure does not further encroach into any established nonconforming setback.

G. Repair of a nonconforming structure that is damaged to the extent of more than 50% of the fair market value of the structure may only be repaired in conformance to all provisions of this title. The zoning board of appeals may grant variances to this provision based on the degree of nonconformity that exists with the property in terms of setbacks, appearance, and location of the structure in relation to other structures in the area. The board will base this review on the provisions of subsections H. and I. herein and the procedures of chapter 18.55.

H. The zoning board of appeals shall use the following provisions in review of variances for substantial improvements, additions, and repairs:

1. The degree of nonconformity of the existing structure.

2. Health and safety codes (i.e., minimum spacing requirements from adjacent structures, height and length of walls, number of windows in walls).

3. The structural integrity of the structure (i.e., is the building in sound condition).

4. The compatibility of the use and structure in relation to other uses and structures within the area.

5. Special consideration may be allowed for locally or nationally designated historic buildings and contributing properties in landmark districts. The zoning board of appeals shall consider any recommendation from the landmarks commission in its review of these requests.

I. The zoning board of appeals shall use the following additional provisions in review of variances for additions and repairs:

1. The addition or repair is not an attempt to effectuate a replacement of the structure that would not normally be allowed.

2. The addition or repair does not surround or encase the existing structure as a means of

replacing it.

J. The zoning administrator shall follow the following procedure in review of an administrative variance:

1. Applications for an administrative variance shall be filed on forms provided by the department with the same fee as is required for a standard variance and shall include all information necessary for the zoning administrator to adequately make a determination.

2. The zoning administrator shall prepare a record that will include all information provided by the applicant and a determination as to whether the application complies with the provisions of this title.

3. For requests that are determined to not comply with the provisions of this title for administrative variances, the matter will be referred to the board per the procedures of section 18.55.040.

4. For requests that are determined to be in compliance with the provisions of this title for administrative variances, notice of the zoning administrator's determination shall be given to all property owners within a distance of 175 ft. of the request. The notice shall allow 7 days for a person that does not agree with the determination to contact the zoning administrator and request a hearing on the matter.

5. If a hearing is requested within the 7 day time period, the zoning administrator will refer the request to the board per the procedures of section 18.55.040.

6. If a hearing is not requested, the zoning administrator shall refund half of the fee and the determination shall be final. (Ord. 6731 §1, 2006; Ord. 5037, 1990).

18.40.040 Nonconforming Lots. A. A nonconforming lot may be used for a one-family dwelling if such use is allowed within the district in which that lot is located, provided all structures shall meet the setback, lot coverage, height and other requirements of this title (excluding lot area and width), except as otherwise provided.

B. Nonconforming vacant lots which are contiguous and held in the same ownership shall be considered as one lot for development purposes and shall be combined to create conforming lots. (Ord. 5037, 1990).

18.40.050 Applicability. A. All uses and structures which were nonconforming immediately prior to the effective date of this amendment (April 16, 1990) shall continue to be nonconforming and shall not become or be deemed to be conforming uses, and their nonconformity shall not be affected in any way as a result of this amendment. The provisions of this amendment shall be supplemental and cumulative to the provisions of former chapter 18.96, which is repealed and recreated by this amendment, and the existing status of all nonconforming uses shall remain unchanged by the adoption of this amendment.

B. The provisions of this chapter shall apply to any use that becomes nonconforming due to a change in the classification of any zoning district, from the effective date of the title making the change.

C. Any person who desires to make changes to any nonconforming use or structure should first contact the zoning administrator to determine the applicability of these provisions. No building permit or certificate of zoning compliance shall be issued unless the proposed change in use or building is determined by the zoning administrator to be in compliance with the provisions of this title. (Ord. 6731 §2, 2006; Ord. 5037, 1990).

18.40.060 Grandfather Rights. A. Any person may request from the zoning administrator a written statement describing the "grandfather rights" of any nonconforming use, structure or lot.

B. A "grandfather right" is the allowed use of a nonconforming use, structure or lot as provided by the provisions of this chapter.

C. The zoning administrator in reviewing requests for "grandfather rights" shall consider any written documentation provided by the applicant which provides evidence that a "grandfather right" does exist under the provisions of this chapter.

D. Where there is doubt as to the interpretation of such written documentation or its applicability to the provisions of this chapter, the zoning administrator may request an interpretation of such matter as provided in chapter 18.55.

E. Any person aggrieved by a decision of the zoning administrator on a matter involving "grandfather rights" may appeal such decision as provided in chapter 18.55. (Ord. 5037, 1990).

Chapter 18.45

SITE PLANS

Sections:

18.45.010 Purpose.

18.45.020 When Required.
18.45.030 Procedure.
18.45.040 Submittal Requirements.
18.45.050 Review Criteria.
18.45.060 Pedestrian and Bicycle Access and Circulation Standards.

18.45.010 Purpose. The purpose of the site plan requirements set forth below are as follows:

A. To maintain and improve the quality of the urban environment;

B. To encourage the compatibility of the design and construction of new development with adjacent and nearby land uses;

C. To identify and resolve potential site planning problems prior to the preparation of final construction plans;

D. To provide that new development is approved and constructed in accordance with the availability of public facilities;

E. To administer effectively all adopted city ordinances and standards with respect to new development;

F. To provide clear and uniform site plan submittal and review procedures and requirements for applicants and the general public;

G. To provide the commission with the relevant information required to evaluate proposed site plans effectively;

H. To facilitate the efficient and effective public review of site plans. (Ord. 5037, 1990).

18.45.020 When Required. A. Site plans shall be submitted, reviewed and approved by the commission prior to the issuance of a building permit for all "new development" as defined herein. Minor site plans may be approved by the Zoning Administrator consistent with the provisions of this chapter, or the applicant may request review by the Commission. No certificate of occupancy shall be issued until all of the requirements of this chapter and all other applicable provisions of this title and building codes have been met.

B. The specific site plan details and information required for submittal shall depend upon the nature or type of "new development" being proposed.

1. Major site plans shall be required for "new development" defined as follows:

a) any construction, addition, alteration or change in use or occupancy which increases the parking requirement by 5 parking stalls or more; or

b) any development or use wherein by ordinance or otherwise a site plan is required as a condition of approval by the commission or council.

c) conversion of any structure or portion thereof to a licensed rooming house.

2. Minor site plans shall be required for "new development" defined as follows:

a) any construction, addition, alteration or change in use or occupancy which increases the parking requirement by 2 parking stalls or more but less than 5 stalls;

b) any construction, addition, alteration or change in use or occupancy which increases the parking requirement by less than 2 stalls, but provides additional temporary storage of vehicles, such as may be used by drive-through facilities; or

c) any construction or paving of privately owned parking areas containing more than 10 parking stalls and not otherwise part of an approved site plan.

C. All site plans required under this section shall comply with Title 19 of the Code of Ordinances of the City of Eau Claire. (Ord. 7239 §2, 2017; Ord. 7214 §1, 2016; Ord. 7079, 2014; Ord. 5832 §3, 1998; Ord. 5037, 1990).

18.45.030 Procedure. A. An application for site plan approval and the applicable fee shall be submitted to the department no less than 10 working days prior to the commission meeting at which the application shall be considered. The application shall be accompanied by 12 copies of the site plan, written material, and other information required in section 18.45.040 and one 8 1/2" x 11" reduction of the site plan.

B. The department shall review the site plan and accompanying material for conformance to this title and shall coordinate additional review as may be appropriate by other city departments. The department shall prepare a report and recommendation to the commission for its consideration of the application.

C. When acting upon an application, the Commission shall consider the proposed site plan in relation to the staff report and the review criteria of section 18.45.050. The immediate action of the commission shall be to approve the site plan with or without conditions, deny it, or defer it for further study subject to the limitations of 18.45.050.

D. Following approval of a site plan and prior to issuance of a building permit, the applicant shall be responsible for submittal to the department 4 copies of the final approved site plan which shall include all changes or other pertinent information required by the Commission.

E. An applicant who wishes to change an approved site plan must contact the department. If the proposed changes are of a nature that the revised site plan will be substantially similar to the approved plan, the director may approve the site plan change. If the proposed changes increase the parking requirement by 2 spaces or more, increase density, or otherwise substantially alter parking, principal uses, drainage, or similar principal site plan elements, then the changes shall be reviewed and decided upon in the same procedure as set forth herein in section 18.45.030.

F. An approved site plan shall only be valid for three years from the date of approval. The applicant or property owner must begin and have building permits issued (if applicable) for the project work within three years or the site plan approval is null and void. Once expired, site plans may only be re-issued following the same procedures as for original approval with those laws and code requirements in place at the time of re-issuance fully applicable and any and all grandfather rights terminated. (Ord. 6937 §1, 2010; Ord. 6896, 2009; Ord. 5037, 1990).

18.45.040 Submittal Requirements. The submittal requirements for site plan applications shall be in two categories, depending upon the nature and extent of proposed development or use, and as defined in section 18.45.020(B). A list of items to be submitted with either a major or minor site plan can be obtained from the department. (Ord. 5037, 1990).

18.45.050 Review Criteria. Within ninety 90 days of the receipt of the application by the department, the commission shall render a decision. If no decision is made by the commission within said 90 day period, the site plan shall be considered approved. The commission shall approve, deny, or approve subject to compliance with such modifications or conditions as it may deem necessary to carry out the purpose of these regulations and insure that the external design and site plan for all developments are in accordance with the provisions of this title. The commission shall impose such conditions as are necessary to carry out policies adopted by ordinance or resolution of the council.

When acting upon an application, the commission shall rely upon generally accepted site planning and design principles. In addition to the provisions and intent of this title, the comprehensive plan, and such policies as may be adopted by the commission or council, the commission shall also give important consideration during the review process to the following criteria for approval:

A. The existing natural topographic and landscape features of a site shall be incorporated into a development plan. Such plan shall include all prudent and necessary steps required to protect the natural environment of the site and surrounding areas during and after construction.

B. Site coverage, paved areas, lawn areas, building scale, setbacks, and open spaces shall be in proportion with existing and planned structures and spaces in the surrounding area.

C. Buildings shall be sited in an orderly, non-random fashion. Excessively long, unbroken building facades shall be avoided. Building materials and design features shall be consistent with the general design theme of the development.

D. All areas not otherwise occupied by structures or paved areas shall be landscaped as per provisions of the City of Eau Claire landscape manual updated December 13, 2016, which is adopted by reference herein. Landscape plans for developments with ground floor areas in excess of 10,000 square feet shall be prepared by a professional landscape architect or an experienced landscaper.

E. Access to the site shall be provided by curb cuts which are limited and located in a manner to minimize traffic congestion and difficult turning movements.

F. The interior circulation of the site shall be designed to provide for the convenient and safe flow of pedestrians and non-pedestrian traffic on the site and onto and from public streets or sidewalks. The provisions of Section 18.45.060, “Pedestrian and Bicycle Access and Circulation Standards,” shall apply.

G. Sites shall be lighted with fixtures, when required, which relate to the scale and design of the development and which have an intensity high enough to maintain security and low enough to avoid being a nuisance. The standards of chapter 16.26, “Outdoor lighting,” shall apply.

H. Paved areas shall be only as large as necessary to serve parking, circulation, and open space needs. The appearance of paved areas shall be enhanced by landscaping. Monotonous, extended, or unbroken parking areas, driveways, and carport or garage structures shall be avoided. Parking structures and areas shall be separated from residential buildings by landscaped areas.

I. Outdoor activity areas, parking lots, storage yards, trash areas and other exterior features or uses shall be adequately landscaped or screened to minimize any potential nuisance features of the use of the site on existing or potential adjacent land uses.

J. Recyclable materials storage areas will be provided for any use which generates significant amounts of recyclable materials and such area will be appropriately screened.

In addition to the above criteria, review of a site plan shall also include consideration of the conformance of the site plan with the ability of the city to provide in a timely and efficient fashion the needed public services and facilities required to adequately serve the proposed development. Public services reviewed shall include, but not be limited to, water, sanitary sewer, storm sewer, streets, sidewalks, traffic control, fire and police protection.

K. The City of Eau Claire Multi-family Housing Design Manual dated December 10, 2019, on file in the office of Community Development, is adopted by reference.

L. The City of Eau Claire Development Guidelines for Waterway and Greenway Areas dated May 13, 2014, and on file in the office of Community Development, is adopted by reference. (Ord. 7352, 2019; Ord. 7214 §2, 2016; Ord. 7117, §1 2015; Ord. 7090, §2 2014; Ord. 6939, 2010; Ord. 6893, 2009; Ord. 6682, 2006; Ord. 5832 §4, 1998; Ord. 5037, 1990).

18.45.060 Pedestrian and Bicycle Access and Circulation Standards. A. Pedestrian, bicycle, and other non-motorized vehicular circulation shall be designed to provide a logical, convenient, and safe flow within a site and provide connections to and from public streets, sidewalks and trails. As reasonably practical, this circulation system shall provide connections to building entrances, parking areas and public streets in order to achieve a method of minimizing conflicts with motorized vehicular traffic, giving equal consideration to the pedestrian, bicycle, and motorized vehicular traffic. Such accommodations shall be designed and maintained for year-round use.

In review of site plans, the Commission shall consider:

1. Direct, safe, and logical on-site connections from parking areas to building entrances;
2. Connections between buildings within the development and connections to adjacent developments;
3. Connections to the street, public sidewalks, multi-use trails, and transit stop locations (if located in the vicinity of the parcel);
4. Sidewalks in the front of buildings on the site;
5. Marked or striped crosswalks or pathways where appropriate, such as where vehicle conflicts exist with walkways;
6. Minimizing vehicular encroachments into pathways and walkways;
7. The avoidance of curb impediments along designated circulation routes through the use of curb ramps or curb-cuts and the avoidance of placing obstacles such as posts and other structures that may hinder such circulation;
8. The width of the sidewalk or connections on site;
9. Phasing for larger master planned developments;
10. Signage, lighting, and maintenance needs;
11. Access from bicycle parking areas to the buildings and related facilities.

B. When applying these provisions to existing developments, the Plan Commission shall require appropriate improvements commensurate with the scope of the building, site, or use changes that are proposed, with an emphasis on addressing both significant conflicts that may exist and important connections that may be lacking. (Ord. 7117, §2 2015)

Chapter 18.50

ADMINISTRATION AND ENFORCEMENT

Sections:

18.50.010 Administration.
18.50.020 Duties of Zoning Administrator.
18.50.030 Certificate of Zoning Compliance.
18.50.040 Building Permits.
18.50.050 Certificate of Occupancy.
18.50.060 Temporary Certificate of Occupancy.
18.50.070 Enforcement and Violation.
18.50.080 Fees.

18.50.010 Administration. The administration and enforcement of this title shall be the responsibility of the director with the aid of the city attorney and Chief of Police. The director shall have the right to delegate said responsibility to appropriate employees who shall be known as the zoning administrators. Said zoning administrator shall have the power of a public officer in the enforcement of this title. (Ord. 5037, 1990).

18.50.020 Duties of the Zoning Administrator. A. The zoning administrator shall have the power to issue certificates of zoning compliance and to make inspections on premises and to collect such investigative data deemed necessary to carry out his or her duties in the enforcement of this title. No person shall refuse to permit the zoning administrator, having reasonable cause therefore, to inspect any premise at reasonable times, nor shall any person molest or resist the zoning administrator in the discharge of his duties.

B. If the zoning administrator finds that any provision of this title is being violated, he or she shall order discontinuance of any work being done, or shall take such action as authorized by the chapter to ensure compliance with, or to prevent violation of the provisions of, this title.

C. The zoning administrator shall not vary, change, or grant exceptions to any of the requirements of this title.

D. It shall be unlawful for the zoning administrator to issue certificates of zoning compliance or other such permits, for any construction or use until he or she has inspected such plans and found them to conform with this title.

E. An administrative review may be made as to the applicability of this title to specific situations by the zoning administrator with the assistance of the city attorney. Such review shall be in written form and a record shall be maintained so as to establish a consistent administration of this title. (Ord. 5037, 1990).

18.50.030 Certificate of Zoning Compliance. A. A building permit for erection, alteration, moving, or repair of any building shall not be issued until a certificate of zoning compliance has been issued therefore. Issuance of such certificate shall indicate that the plans for which the building permit is requested complies with this title. For the convenience of any applicant or the City of Eau Claire, the zoning administrator may combine a certificate of zoning compliance with a building permit.

B. It shall be unlawful to use, occupy, or permit the use or occupancy of any building or premises, or both, or part thereof hereafter created, erected, changed, converted, or wholly or partially altered, or enlarged in its use or structure until a certificate of zoning compliance has been issued by the zoning administrator. This certificate shall state that the building, structure, and lot, and use thereof, conform to the requirements of this title.

C. The zoning administrator shall maintain a record of all certificates of zoning compliance and said records shall be open for public inspection. Failure to obtain a certificate of zoning compliance shall be a violation of this title.

D. It shall not be necessary for a nonconforming use or structure existing on the effective date of this title to obtain certificates of zoning compliance in order to maintain its legal, nonconforming status. However, no nonconforming structure or use shall be renewed, changed, or extended until a certificate of zoning compliance shall have been issued by the zoning administrator. This certificate shall state specifically wherein the nonconforming structure or use differs from the provisions of this title. (Ord. 5037, 1990).

18.50.040 Building Permits. A. No building permit for erection, alteration, moving, or repair of any building shall be issued until a certificate of zoning compliance has been issued.

B. No building or other structure shall be erected, moved, added to, or structurally altered without a building permit issued by the building inspector.

C. No building permit shall be issued by the building inspector except in conformity with this title, unless he or she receives a written notice from the board or zoning administrator in the form of an administrative review, interpretation, appeals or a variance, as provided by this title.

D. All plans submitted in application for a building permit shall contain information necessary for determining conformity with this title, including site plans or any other information deemed necessary by the zoning administrator. (Ord. 5037, 1990).

18.50.050 Certificate of Occupancy. A. A certificate of occupancy, stating that all provisions of this title have been fully complied with, shall be issued by the zoning administrator before:

1. Any structure for which a building permit is required is used or occupied, including any conversion of any building to provide additional dwelling units. The certificate of occupancy may be waived for accessory buildings and structures, small additions, minor alterations, or those projects where no zoning ordinance requirements are affected;
2. Any use of an existing structure is changed to a use of a different classification;
3. Any nonconforming use is changed to another use.

B. In the case of a structure or use established, altered, enlarged, or moved after conditional approval thereof by the board, commission, or council, such certificate of occupancy shall be issued only if all conditions thereof shall have been satisfied.

C. Application for a certificate of occupancy shall be made and filed with the zoning administrator when any structure or use for which such certificate is required is ready for occupancy. Within 3 days after the filing thereof, the zoning administrator shall inspect such structure or use, including all required site improvements. If the zoning administrator finds the structure or use to be in conformity with all provisions of this title, he or she shall sign and issue a certificate of occupancy. For the convenience of any applicant or the City of Eau Claire, the zoning administrator may combine a certificate of occupancy with the occupancy permit required by the building code.

D. No permit or license required by the city or other governmental agency shall be issued by any department, office, or employee of the city or such governmental agency, unless the application for such

permit or license is accompanied by certificate of occupancy issued by the zoning administrator. (Ord. 5333, 1993; Ord. 5037, 1990).

18.50.060 Temporary Certificate of Occupancy. A. Whenever the building, addition, alteration or use for which a certificate of occupancy is required is substantially completed and ready for occupancy, in the opinion of the zoning administrator, but part of the building or site is not fully completed according to the approved site plan or other approval of the city, a temporary certificate of occupancy may be issued.

B. The zoning administrator may issue, upon prior written application of the owner or developer of the property, a temporary certificate of occupancy which shall permit occupancy of the building or site, in whole or in part, and for such time necessary for full completion of all required improvements, but not to exceed 12 months.

C. If the building or site is not fully completed according to the approved site plan or other city approval within such 12 month period, occupancy of the building or site shall be unlawful and prohibited until full compliance is attained and a certificate of occupancy is issued.

D. A temporary certificate of occupancy shall contain a statement of the items which are not completed, the time for completion, the owner's or developer's signature and such other information necessary for the zoning administrator to enforce these provisions.

E. Only one temporary certificate of occupancy for each site for each occupancy or use is permitted. (Ord. 5037, 1990).

18.50.070 Enforcement and Violation. A. Notice of violation.

1. Whenever the zoning administrator determines that a violation of this title exists, that person shall issue a notice of violation.

2. Such notice shall be directed to each owner or a party in interest in whose name the property appears on the local tax assessment records.

3. All notices shall be in writing and shall be served upon the person to whom they are directed personally, or in lieu of personal service may be mailed by regular mail, addressed to such owner or party in interest at the address shown on the local tax records.

4. All violations shall be corrected within the period of time as specified on the notice of violation. A violation not corrected within this time period may result in prosecution.

5. Subsections 1 through 4 above shall not apply to the enforcement of subsection 18.20.180 E. which regulates the number of persons residing in dwelling units. Tenants, property owners, and parties in interest may be prosecuted for this violation. However, a property owner or party in interest may not be prosecuted for a violation of subsection 18.20.180 E. if it is established that said person had no knowledge of the violation, and if that person assists enforcement authorities to ensure that any violation is abated.

B. All departments, officials, and employees of the City who are invested with the duty or authority to issue permits or licenses shall issue no such permit or license for any use, structure, or purpose if the same would not conform to the provisions of this title.

C. Any building erected, constructed, or reconstructed in violation of the provisions hereof shall be deemed an unlawful structure, and the zoning administrator or city attorney or other official designated by the council may bring action to enjoin such erection, construction, or reconstruction, or cause such structure to be vacated or removed. It is unlawful to erect, construct, or reconstruct any building or structure in violation of the provisions hereof.

D. Any person violating any provisions of this title for which no other penalty is provided shall, upon conviction thereof, forfeit not less than $25 nor more than $500 and the cost of prosecution, and in default of payment thereof shall be imprisoned in the county jail not to exceed 30 days. Each day any violation of this title is committed or permitted to continue shall constitute a separate offense and shall be punishable as such hereunder. (Ord. 5958, 1999; Ord. 5037, 1990).

18.50.080 Fees. A. Fees for various applications as identified by this title shall be as stated in the City of Eau Claire Fees and Licenses Schedule. (Ord. 6363 §38, 2002; Ord. 6243 §2, 2001; Ord. 5037, 1990).

Chapter 18.55

BOARD OF APPEALS

Sections:

18.55.010 Board of Appeals Created.
18.55.020 Membership.
18.55.030 Organization and Rules.

18.55.040 Notice of Hearing.
18.55.050 Powers.
18.55.060 Board Decision - When Final.
18.55.070 Court Review.

18.55.010 Board of Appeals Created. A board of appeals is created under the provisions of Wisconsin Statutes 62.23(7)(e). (Ord. 5037, 1990).

18.55.020 Membership. A. The board shall consist of 5 members shall be recommended by the advisory committee on appointments and confirmed by the city council for terms of 3 years. The members of the board shall be removable by the council cause. Vacancies shall be filled for the unexpired terms of members whose terms become vacant. Board members shall be limited to 2 three year terms, the calculation of which shall not include service performed in filling an unexpired term.

B. The city manager shall appoint, with confirmation from council, 2 alternate board members for a term of 3 years. Annually, the city manager shall designate one of the alternates as the first alternate, the other as the second alternate. The first alternate shall act, with full power, only when a member of the Board refuses to vote because of interest or when a member is absent. The second alternate shall so act only when the first alternate so refuses or is absent or when more than one member of the Board so refuses or is absent. The provisions in subsection A. pertaining to removal and vacancies shall apply to each alternate. (Charter Ord. 6935, 2010; Ord. 5037, 1990).

18.55.030 Organization and Rules. A. The city manager shall designate one of the members chairperson whose duties shall be:

1. To determine dates and times for special meetings or hearings of the board;
2. To preside at all meetings of the board;
3. To decide all points of procedure, unless otherwise directed by a majority vote of the board, and to call for the vote of each member on each question;
4. To supervise the work of the secretary, including keeping of records and compliance with the Wisconsin public records law; and
5. To administer oaths and compel the attendance of witnesses when necessary.

B. The board shall elect by majority vote its own vice chairperson and secretary. The vice chairperson shall act in absence of the chairperson. The secretary shall sign the minutes of the board meetings and the performance of the following duties by staff:

1. To conduct all correspondence of the board;
2. To receive, file and provide public access to all appeals, applications, papers and records;
3. To prepare, publish and mail all notices required by law, ordinance, rule or request of the Board or chairperson;
4. To prepare and keep calendars, dockets and minutes of board proceedings;
5. When required, to arrange for a stenographic record of hearings;
6. To keep a record of all board actions, showing the vote of each member on every appeal, the reasons for the board's determination, its findings of fact and conclusions of law; and
7. To prepare and mail to each person who appears in support of or opposition to an appeal or variance, the board's decision, and its findings in support of that decision.

C. The board shall meet, whenever feasible, the first Tuesday of each month or at special meetings or hearings called by the chairperson or the board.

D. The board shall adopt its own rules for conducting business in accordance with the provisions of this chapter. (Ord. 5037, 1990).

18.55.040 Procedures - Notice of Hearings. The board shall fix a reasonable time for the hearing of an appeal, variance or other matter referred to it and shall provide public notice and notice to parties of interest as provided herein.

1. Applications for appeals or variances shall be filed on forms provided by the department with a fee as stated in the City of Eau Claire Fees and Licenses Schedule and shall include all information necessary for the board to adequately make a determination.
2. The zoning administrator shall prepare a staff report which will include all information provided by the applicant and an analysis of the application as it relates to applicable provisions of this title.
3. Notice to the appellant shall be given not less than 7 days prior to the date of the hearing.
4. Notice to all property owners within a distance of 300 feet or, in the case of an application involving a heavy manufacturing and production use as defined by Section 18.06.040, 500 feet of the property concerned shall be given not less than 7 days prior to the date of the hearing. A Zoning Hearing Notice sign shall be posted on the property by the department.

5. The zoning administrator shall cause one publication of notice in the official city newspaper of the hearing of cases on the calendar of the board at least 10 days prior to the date of hearing. (Ord. 7051, §2, 2013; Ord. 6363 §38, 2002; Ord. 5037, 1990).

18.55.050 Powers. A. Appeals. The board shall hear and decide appeals where it has been alleged there is an error in any order, requirement, decision or determination made by the zoning administrator in the enforcement or administration of Wisconsin Statutes S. 62.23 or this title:

1. Appeals to the board may be made by any person aggrieved, or by any officer, department, board or bureau of the city affected by any decision of the zoning administrator. Such appeal shall be made within a reasonable time, as provided by the rules of the board, by filing with the zoning administrator a notice specifying the grounds of the appeal. The zoning administrator shall transmit to the board all the papers constituting the record upon which the appeal was made.

2. An appeal shall stay all legal proceedings in the action appealed from, unless the zoning administrator certifies to the board, after the notice of appeal has been filed with him, that, by reason of facts in the certificate, a stay would cause imminent peril to life or property. In such cases, proceedings shall not be stayed except by a restraining order from the board or by a court of record on application, on notice to the zoning administrator, and on due cause shown.

3. The concurring vote of a majority of a quorum of the board shall be necessary to reverse any order, requirement, decision or determination of the zoning administrator or to decide in favor of the applicant on any matter upon which it is required to pass under this title. The final disposition of an appeal shall be in the form of a written resolution or order signed by the secretary of the board. Such resolution or order shall state the specific facts which are the basis for the board's determination, and shall either affirm, reverse, vary or modify the order, requirement, decision or determination appealed, in whole or part, or shall dismiss the appeal for lack of jurisdiction or prosecution.

B. Variances. The board may grant variances from the terms of this title as will not be contrary to the public interest, where, owing to special conditions, a literal enforcement of the provisions of this title will result in practical difficulty or unnecessary hardship, so that the spirit of this title shall be observed, public safety and welfare secured, and substantial justice done.

1. "Practical difficulty and unnecessary hardship", as used in this section and as applied to area variances, means that difficulty or hardship which results when compliance with the strict letter of this title governing area, setbacks, frontage, height, bulk or density would unreasonably prevent the owner from using the property for a permitted purpose or would render conformity with such restrictions unnecessarily burdensome.

2. Loss of profit or pecuniary hardship shall not, in and of itself, be grounds for granting a variance.

3. Self-imposed hardship shall not be a ground for granting a variance.

4. Violations existing on, or variances granted to, neighboring properties shall not require the granting of a variance.

5. The hardship cannot be one that would have existed in the absence of a zoning ordinance.

6. Use variances shall not be granted by the board. A change in use requires a zoning map amendment.

7. The variance shall not be unduly detrimental to adjacent properties.

8. A variance granted shall be the minimum necessary to grant relief.

9. No variance shall conflict with the purpose or intent of this title or with the policies of the comprehensive plan.

10. The concurring vote of a majority of a quorum of the board shall be necessary to grant a variance. The final disposition of a variance shall be in the form of a written resolution or order signed by the secretary of the board which shall state the specific findings which are the basis for the board's determination.

11. If a variance is granted, it shall run with the land if all the conditions that are attached are met.

12. In granting variances, the board may impose reasonable special conditions to ensure that the purpose of this title is met. Violations of such conditions, when made part of the terms under which the variance is granted, shall be deemed a violation of this title, and, in addition to other applicable sanctions, may result in revocation of the variance by the board following notice and hearing.

C. Interpretations. The zoning administrator may, where there is doubt as to the meaning thereof, present to the board for their interpretation the words, terms, rules, regulations, provisions and restrictions of this title. The board's interpretation shall be binding on the zoning administrator.

1. In exercising its power of interpretation, the board's action shall not change or have the effect of changing any rule, regulation, provisions or restriction of this title, but shall only affect its application to the specific case before the board.

2. The board shall determine the location of boundaries of zoning districts where uncertainty exists.

3. Interpretation by the board may be made without hearing and shall require the concurring vote of a majority of a quorum of the board. (Ord. 6693, 2006; Ord. 5037, 1990).

18.55.060 Board Decision - When Final. The board shall decide on any matter within a reasonable time after date of hearing thereon. Decision in favor of any applicant shall be approval, or conditional approval of the matter applied for and shall be an order to the zoning administrator to carry out such action, subject to any such conditions. (Ord. 5037, 1990).

18.55.070 Court Review. Review by a court of record of any decision by the board of appeals, upon petition to said court by any person or persons, jointly or severally aggrieved by any decision, shall be as provided by law. (Ord. 5037, 1990).

Chapter 18.60

OFFICIAL MAP

Sections:

18.60.010 Purpose.
18.60.020 Official Map Established.
18.60.030 Filing.
18.60.040 Effect.
18.60.050 Changes and Additions.
18.60.060 Subdivision Plat Conformity.
18.60.070 Building Permits.
18.60.080 Violations and Penalty.

18.60.010 Purpose. A. Pursuant to section 62.23(6), the regulations and restrictions established herein have been made in accordance with the comprehensive plan, which plan and these regulations and restrictions are designed to:

1. Lessen congestion in the streets;
2. Secure safety from fire, panic and other dangers;
3. Promote health and the general welfare;
4. Provide adequate light and air;
5. Prevent the overcrowding of land;
6. Avoid undue concentration of population; and
7. Facilitate adequate provisions for transportation, water, sewage, schools, parks, park ways, and other public requirements.

B. Such regulations and restrictions have further been made with reasonable consideration of the character of each zoning district and its peculiar suitability for particular uses, and with a view to conserving the value of buildings and encouraging the most appropriate use of land throughout the city. (Ord. 5037, 1990).

18.60.020 Official Map Established. To conserve and promote the public health, safety, convenience and general welfare, there is established an official map of the city and its extraterritorial plat approval jurisdiction, said map being incorporated herein as though fully set forth. (Ord. 5037, 1990).

18.60.030 Filing. Immediately upon this chapter becoming effective, the city clerk shall file a certificate with the register of deeds for Eau Claire and Chippewa counties that the city has established an official map. (Ord. 5037, 1990).

18.60.040 Effect. The official map shall be deemed to be final and conclusive with respect to the location and width of streets, highways, waterways, railroad rights-of-way, public transit facilities, parks or playgrounds shown thereon. (Ord. 5037, 1990).

18.60.050 Changes and Additions. The council, whenever and as often as it may deem it for the public interest, may change or add to the official map so as to establish the exterior lines of planned new streets, highways, waterways, railroad rights-of-way, public transit facilities, parkways, parks or playgrounds, or to widen, narrow, extend or close existing streets, highways, railroad rights-of-way, public transit facilities, parkways, parks or playgrounds. Any change or addition may be made only in the manner prescribed in section 62.23(6) of the Wisconsin Statutes. (Ord. 5037, 1990).

18.60.060 Subdivision Plat Conformity. The commission shall require conformity with the official map in recommending approval of any subdivision plat. (Ord. 5037, 1990).

18.60.070 Building Permits. For the purpose of preserving the integrity of such official map, no permit shall hereafter be issued for any building in the bed of any street, highway, waterway, railroad rights-of-way, public transit facilities or parkway shown or laid out on such map, and no permit for the erection of any building shall be issued unless a street, highway or parkway giving access to such proposed structure has been duly placed on such map, except as provided in section 62.23(6)(e) and (h), Wisconsin Statutes. The building inspector shall require each applicant to submit a plot plan, certified by a registered surveyor, showing accurately the location of any proposed building with reference to any street, highway, waterway, railroad rights-of-way, public transit facilities, parkway, park or playground shown on the official map. Only the board may grant such building permits and then only in accordance with the standards set forth in section 62.23(6), Wisconsin Statutes. (Ord. 5037, 1990).

18.60.080 Violations and Penalty. Any person who fails to comply with the provisions of this chapter shall, upon conviction thereof, forfeit not less than $25 nor more than $500 and the costs of prosecution, and in default of payment of such forfeiture and costs, shall be imprisoned in the county jail until payment thereof, but not exceeding thirty days for each violation. Each day a violation exists or continues shall constitute a separate offense. (Ord. 5037, 1990).

Chapter 18.65

AMENDMENTS AND REZONING

Sections:

18.65.010 Purpose.
18.65.020 Amendment Initiation.
18.65.030 Procedure.
18.65.040 Conditions May be Attached.
18.65.050 Fact Finding.
18.65.060 Community Living Arrangements.

18.65.010 Purpose. For the purpose of establishing and maintaining sound, stable and desirable development within the city limits of Eau Claire, this title shall not be amended except to correct an error in the text, or because of changed or changing conditions in a particular area in the city generally, to rezone an area, extend the boundary of an existing district, or to change the regulations and restrictions thereof. (Ord. 5037, 1990).

18.65.020 Amendment Initiation. Only the council may amend this Title. Proposals for amendments or rezonings may be initiated by the council on its own motion, by the commission, or by petition of one or more owners of property or persons showing proprietary interest in the proposed amendment or rezoning. (Ord. 5037, 1990).

18.65.030 Procedure. A. A petition for amendment or rezoning, together with a completed and signed application and fee, shall be filed with the department.

B. The department shall transmit such application to the city clerk who shall cause a hearing to be held upon such proposed amendment following publication of a class 2 notice under Chapter 985 of the Wisconsin Statutes. The city clerk shall also provide notice to all property owners within 300 feet or, in the case of an application involving a heavy manufacturing and production use as defined in Section 18.06.040, 500 feet of the property involving a rezoning. A Zoning Hearing Notice sign shall be posted on the property by the department or, if multiple properties are involved, the Plan Commission may direct an alternate means of notice.

C. The commission shall hold a hearing on the proposed amendment or rezoning and submit its recommendation and report to the council within 60 days from hearing the petition.

D. The council either enacts or rejects petitions as an ordinance amendment, or the council may consider amendments, changes, additions, or departures advisable to the petition provisions. If the council makes such changes, it shall refer the petition back to the commission for rehearing and notice shall again be given as provided in subsection B.

E. No petition for rezoning which has been denied by the council shall be resubmitted in substantially the same form within a one year period from the date of denial, unless a change in condition of the site or the surrounding area exists.

F. If a valid protest petition is timely filed, as provided in section 62.23(7)(d)2m. a., Wisconsin Statutes, rezonings shall require a three-fourths favorable vote of the members of the council voting on the proposed change. (Ord. 7126, 2015; Ord. 7051 §3, 2013; Ord. 5037, 1990).

18.65.040 Conditions May Be Attached. In the case of a rezoning, the commission may recommend and the council may approve such petitions with conditions of approval that may include any of the provisions found in section 18.35.030, provided that the same does not constitute unlawful spot zoning. (Ord. 5037, 1990).

18.65.050 Fact Finding. A. In reviewing any petition for an amendment or rezoning, the commission shall identify and evaluate all factors relevant to the petition, and shall report its findings in full, along with its recommendations for disposition of the petition, to the council.

B. The facts to be considered by the commission and council shall include, but not be limited to, the following:

1. Whether the requested amendment is justified by a change in conditions since the original title was adopted or by an error in the original text.

2. The precedents, and the possible effects of such precedents, which might likely result from approval or denial of the petition.

3. The ability of the city or other government agencies to provide any services, facilities, and/or programs that might be required if the petition were approved.

4. The possibility of any significant and negative environmental impacts which would reasonably occur if the petitioned zoning change and resulting permitted structures were built; including but not limited to, surface water drainage problems, wastewater disposal problems, or the loss of locally valuable natural resources.

5. The compatibility of the proposed uses associated with the petitioned zoning change to existing or planned uses with the immediate area.

6. The effect of approval of the petition on adopted development policies of City of Eau Claire.

7. The compliance of the proposed rezoning with the policies of the comprehensive plan. (Ord. 5037, 1990).

18.65.060 Community Living Arrangements - Special Zoning Permission; Distance Exception.

A. The procedure and the fee for review of requests for special zoning permission for any community living arrangement pursuant to Wisconsin Statutes s. 62.23(7)(i) shall be the same as required for an amendment to this title as provided in this chapter, except that such special zoning permission may be granted by resolution. Special zoning permission for a community living arrangement shall be granted only if the city council determines that all of the following conditions are present:

1. That the establishment, maintenance, or operation of the community living arrangement will not be materially detrimental to or endanger the public health, safety, morals, or general welfare;

2. That the uses, values and enjoyment of other property in the neighborhood for purposes already permitted shall be in no foreseeable manner substantially impaired or diminished by the establishment, maintenance or operation of the community living arrangement;

3. That the establishment of the community living arrangement will not significantly impede the normal and orderly development and improvement of the surrounding property for uses permitted in the district;

4. That adequate utilities, access road, off-street parking, drainage, and other necessary site improvements have been or will be provided to the community living arrangement;

5. That adequate measures have been or will be taken to provide ingress and egress so designed as to minimize traffic congestion and hazard in the public streets;

6. That the community living arrangement shall conform to all applicable regulations of the district in which it is located;

7. That the community living arrangement is in conformance with the purpose of the zoning district in which it is located and complies with the provisions and policies of the comprehensive plan.

B. Application for exception from the 2,500 foot limitation contained in Wisconsin Statutes 62.23(7)(i) shall be considered in the same manner as a zoning ordinance amendment as provided in this chapter, except only a class 1 notice under chapter 985 of the Wisconsin Statutes need be provided. Such exception from the 2,500 foot limitation may be granted by resolution. (Ord. 5037, 1990).

Chapter 18.70

PLAN COMMISSION

Sections:

18.70.010 Authority and Functions.
18.70.020 Specific Duties and Powers.

18.70.010 Authority and Functions. The commission shall exercise all authority and functions as provided in section 62.23, Wisconsin Statutes. (Ord. 5037, 1990).

18.70.020 Specific Duties and Powers. The commission shall perform the following duties and exercise the following powers:

A. To conduct studies and prepare recommendations for amendments to the comprehensive plan.

B. To conduct studies and prepare recommendations for updates to the zoning ordinance.

C. To hear applications for rezoning for individual properties or for larger areas and to make recommendations on such matters to the council.

D. To hear applications for changes to the text of the zoning ordinance and to make recommendations on such matters to the council.

E. To hear and decide on conditional use permit requests.

F. To hear and decide on preliminary plat requests and to recommend to council requests on final plats.

G. To review and decide on site plan requests.

H. To hear and make recommendations to the council on matters pertaining to official mapping, planned developments, community living arrangements and other matters as provided in Wisconsin Statutes.

I. To hear and to act on such other matters as may be referred to the commission by the council. (Ord. 5037, 1990).

Title 19

STORMWATER

Chapters:

19.01 Stormwater Management Services
19.10 Stormwater Definitions
19.20 Construction Site Erosion Control
19.30 Stormwater Management

Chapter 19.01

Stormwater Management Services

Sections:

19.01.010 Purpose and necessity; Authorization.
19.01.020 Creation.
19.01.030 Authority.
19.01.040 Definitions.
19.01.050 Rates and charges.
19.01.060 Classifications of customers.
19.01.070 Billing and collection.
19.01.090 Customer classifications.
19.01.100 New construction.
19.01.110 Appeal.
19.01.130 Penalty.

19.01.010 Purpose and necessity; Authorization. The city council of the city of Eau Claire finds that the management of stormwater and other surface water discharges within and beyond the Chippewa River, the Eau Claire River and other bodies of water within the city is a matter that affects the health, safety and welfare of the city, its citizens and businesses and others in the surrounding area. Failure to effectively manage stormwater affects the sanitary sewer utility operations of the city by, among other things, increasing the likelihood of infiltration and inflow into the sanitary sewer system. Surface water runoff may cause erosion

of lands, threaten residences and businesses with water damage, and create environmental damage to the rivers, streams and other bodies of water within and adjacent to the city. A system for the collection and disposal of stormwater provides services to all properties within the city of Eau Claire and surrounding areas, including those properties not currently served by the system. The cost of operating and maintaining the city stormwater management system and financing necessary repairs, replacements, improvements and extensions thereof should, to the extent practicable, be allocated in relationship to the services received from the system. In order to protect the health, safety and welfare of the public, the city council hereby exercises its authority to establish a stormwater utility and establish the rates for stormwater management services. In promulgating the regulations contained in this chapter, the city is acting pursuant to authority granted by chapters 62 and 66 of the Wisconsin Statutes, including, but not limited to, sections 62.04, 62.11, 62.16(2), 62.18, 66.0621, 66.0809, 66.0811, 66.0813, 66.0821 and 66.0627. (Ord. 6212 §9, 2001; Ord. 5951 §1, 1999; Ord. 5670, 1996).

19.01.020 Creation. There is hereby established a stormwater utility in the city of Eau Claire. The operation of the stormwater utility shall be under the supervision of the city manager. (Ord. 5670, 1996).

19.01.030 Authority. The city, acting through the stormwater utility, may acquire, construct, lease, own, operate, maintain, extend, expand, replace, clean, dredge, repair, conduct, manage and finance such facilities, operations and activities, as are deemed by the city to be proper and reasonably necessary for a system of storm and surface water management. These facilities may include, without limitation due to enumeration, surface and underground drainage facilities, sewers, watercourses, retaining walls, ponds, streets, roads, ditches and such other facilities as will support a stormwater management system. (Ord. 5670, 1996).

19.01.040 Definitions. In this chapter:

A. "Charge" means the fee imposed under this chapter for the rendering of stormwater utility services by the city.

B. "Equivalent runoff unit" or "ERU" is the basic unit by which a storm sewer charge is calculated under this chapter and is based upon the impervious area reasonably determined by the city.

C. "Impervious area" means a surface which has been compacted or covered with a layer of material so that it is highly resistant to infiltration by rain water. The term includes, without limitation due to enumeration, all areas covered by structures, roof extensions, patios, porches, driveways, loading docks and sidewalks, and semi-impervious surfaces such as compacted gravel, all as measured on a horizontal plane.

D. "Duplex" means a residential dwelling having two dwelling units.

E. "Dwelling unit" means a room or group of rooms including cooking accommodations, occupied by one family, and in which not more than two persons, other than members of the family, are lodged or boarded for compensation at any one time.

F. "Multifamily unit" means any residential property comprised of three or more dwelling units.

G. "Nonresidential property" means a lot or parcel of land, with improvements such as a building, structure, grading or substantial landscaping, which is not residential property, excluding publicly-owned rights of way, airport runways, airport taxiways, recreational trails, and publicly-owned or privately-owned rail beds utilized for railroad transportation.

H. "Residential property" means a lot or parcel of land developed exclusively for residential purposes, including single-family units and duplexes not exceeding one acre in area, and multifamily units. The term includes manufactured homes.

I. "Single family unit" means any residential property, including manufactured homes, consisting of one dwelling unit.

J. "Stormwater utility" means the utility established under this chapter for the purpose of managing stormwater and imposing charges for the recovery of costs connected with such stormwater management.

K. "Undeveloped property" means property that is not developed by the addition of an improvement such as a building, structure, grading or substantial landscaping. A property shall be considered to be developed if:

1. A certificate of occupancy has been issued for a building or structure on the property or, if no certificate of occupancy has been issued, upon substantial completion of construction or final inspection; or

2. Construction of an improvement on the property is at least 50 per cent completed and such construction has ceased for a period of at least 3 months, whether consecutive or not. (Ord. 7062, §1 2013; Ord. 5878, 1998; Ord. 5670, 1996).

19.01.050 Rates and charges. A. The basis for computation of the charge for stormwater services to lots and parcels of land within the city is established under this section. The amount of charge to be imposed, the establishment of formulas for the calculation of charges, the creation of customer classifications for the imposition of charges, and changes in such charges, formulas and customer classifications may be

made by resolution. All charges established pursuant to this chapter shall be fair and reasonable. A schedule of current charges shall be maintained and on file in the office of the city clerk.

B. Charges shall be imposed to recover all or a portion of the costs of the stormwater utility. Such charges may include the following components:

1. Base charge. A base charge may be imposed on all property in the city. The base charge is established in recognition of the fact that all properties in the city receive services from the stormwater management activities of the city and that all property contributes to some degree to the stormwater discharge that must be managed by the city. The base charge shall be assessed to collect the administrative costs of the stormwater utility and may include capital, operating and maintenance costs of the stormwater utility which are not recovered by other means. The base charge may be based on the size of a lot or parcel of land.

2. Equivalent runoff unit charge (ERU). An equivalent runoff unit charge may be imposed on all property that has an impervious area. The ERU charge shall be assessed based upon the impervious area as reasonably determined by the city. The ERU is established to be 3,000 square feet. (Ord. 7062, §2 2013; Ord. 5670, 1996).

19.01.060 Classifications of customers. The council may establish classifications other than the customer classifications under section 19.01.090 as will be likely to provide a reasonable and fair distribution of the costs of the stormwater utility. (Ord. 5670, 1996).

19.01.070 Billing and collection. A. Bills for stormwater utility charges shall be mailed to the recipient designated by the owner of the property to which the bill relates, provided that such mailing shall not relieve the owner of rental property from liability for the charges in the event payment is not made. The owner of any property which is occupied by tenants shall have the right to examine the appropriate records of the city to determine whether such rates and charges have been paid by such tenants, provided that such examination shall be made at the office at which the records are kept during normal business hours.

B. A late payment charge of 3 percent will be added to bills not paid within 20 days of issuance in accordance with the provisions of s. 14.20.020 of this code.

C. All stormwater service charges shall be taxed and collected and shall be a lien upon the property served in the same manner as water service charges are taxed and collected under the provisions of Wisconsin Statutes, section 66.0809, and the provisions of title 14 of this code. (Ord. 6212 §10, 2001; Ord. 5670, 1996).

19.01.090 Customer classifications. A. For the purpose of imposing the charges imposed under this chapter, all lots and parcels of land in the city shall be classified into the following customer classifications:

1. Residential -- single family unit.
2. Residential -- duplex.
3. Residential -- multifamily.
4. Nonresidential.
5. Undeveloped.

B. The ERU charges for the foregoing classifications shall be established as follows:

1. Residential -- single family unit: one ERU.
2. Residential -- duplex: 0.5 ERU times each dwelling unit.
3. Residential -- multifamily: 0.4 ERU times the number of dwelling units within the multifamily dwelling.
4. Nonresidential -- one ERU times a factor obtained by dividing the total impervious area of the nonresidential property by the square footage equivalent for one ERU (3,000). Such impervious area shall be determined based on the best information reasonably available. The result shall be rounded down to the nearest five-tenths (0.5). The minimum charge for a nonresidential property shall be equal to the rate for five-tenths (0.5) of one ERU.

C. Undeveloped property shall be charged based on a factor established by the city council resolution adopted under s. 19.01.050 A.

D. All unoccupied lots and parcels of land shall be subject to stormwater utility charges. (Ord. 7062, §4 2013; Ord. 5670, 1996).

19.01.100 New construction. Except for single family units, a property owner shall be responsible for submitting a stormwater utility service application at the time a building permit is issued or a site plan review is conducted. The application shall be made on a form prescribed by the city and provided with each application for a building permit or application for site plan review. Failure to submit such stormwater utility service application or providing false information on such form shall be a violation of this chapter. (Ord. 5670, 1996).

19.01.110 Appeal. A. A stormwater utility charge may be appealed to the utility appeals board created under ch. 2.50 of the code of ordinances. An appeal can be undertaken by filing a written appeal with the city clerk prior to the due date of the charge or within 30 days of payment. The written appeal shall specify all grounds for challenge to the amount of the charge and shall state the amount of charge that the appellant considers to be appropriate. Failure to appeal within 30 days of payment shall deprive the utility appeals board of jurisdiction to hear the appeal.

B. In considering an appeal, the utility appeals board shall determine whether the stormwater utility charge is fair and reasonable and, in the event the appeal is granted, whether or not a refund is due the appellant and the amount of the refund. The utility appeals board shall conduct a formal or informal hearing and obtain sufficient facts upon which to make a determination. The decision of the utility appeals board shall be based upon the evidence presented to it. The utility appeals board shall notify the appellant in writing of its determination. (Ord. 5670, 1996).

19.01.130 Penalty. A person violating s. 19.01.100 shall, upon conviction, pay a forfeiture not to exceed $500 for each offense, in addition to the costs of prosecution which are allowed by law. Each day during which a violation exists shall constitute a separate offense. (Ord. 5670, 1996).

Chapter 19.10

STORMWATER DEFINITIONS

Sections:

19.10.010 Definitions.

19.10.010 Definitions. In this title:

A. "Adequate sod, or self-sustaining vegetative cover" means maintenance of sufficient vegetation types and densities such that the physical integrity of the streambank or lakeshore is preserved. Self-sustaining vegetative cover includes grasses, forbs, sedges and duff layers of fallen leaves and woody debris.

B. "Atlas 14" means the National Oceanic and Atmospheric Administration (NOAA) Atlas 14 Precipitation-Frequency Atlas of the United States,

C. "Average annual rainfall" means a calendar year of precipitation, excluding snow, determined to be Minneapolis, 1959 (March 13 - November 4).

D. "Best management practice" or "BMP" means structural or non-structural measures, practices, techniques or devices employed to avoid or minimize soil, sediment or pollutants carried in runoff off-site.

E. "BOD5" means biological oxygen demand measured over a five day period at a temperature of 20 degrees Celsius.

F. "Clear water waste" means that defined in Section H.62.12 Wisconsin Administrative Code.

G. "Closed depression" means a low area that does not have a drainage outlet.

H. "Construction site" means an area upon which one or more land disturbing construction activities occur, including areas that are part of a larger common plan of development or sale where multiple separate and distinct land disturbing construction activities may be taking place at different times on different schedules but under one plan. A long-range planning document that describes separate construction projects, such as a 20-year transportation improvement plan, is not a common plan of development.

I. Design Storm" means a hypothetical discrete rainstorm characterized by a specific duration, temporal distribution, rainfall intensity, return frequency and total depth of rainfall.

J. "Detention" means a stormwater management facility having a controlled release other than pumping, infiltration, or evaporation.

K. "Development" means residential, commercial, industrial or institutional land uses and associated roads.

L. "Drainage Way" means an area where runoff from adjacent areas either collects or passes through the site, regardless of whether the runoff is from private, public property or road right-of-way. A drainage way under this section may be natural or constructed.

M. "Erosion" means the process by which the land's surface is worn away by the action of wind, water, ice or gravity.

N. "Erosion and sediment control plan" means a comprehensive plan developed to address pollution caused by erosion and sedimentation of soil particles or rock fragments during construction.

O. "Final stabilization" means that all land disturbing construction activities at the construction site have been completed and that a uniform perennial vegetative cover has been established with a

density of at least 70 percent of the cover for the unpaved areas and areas not covered by permanent structures or that employ equivalent permanent stabilization measures.

P. “Highest local groundwater elevation” means the highest groundwater elevation on a site as indicated by the depth of mottled soil or measured groundwater elevations.

Q. “Impervious surface” means an area that releases as runoff all or a large portion of the precipitation that falls on it, except for frozen soil. Rooftops, sidewalks, driveways, gravel or paved parking lots and streets are examples of areas that typically are impervious.

R. “In-fill” means an undeveloped area of land located within an existing urban sewer service area, currently served by city utilities, and surrounded by development or development and natural or man-made features where development cannot occur.

S. “Infiltration” means the entry of precipitation or runoff into or through the soil.

T. “Land disturbing activity” means any man-made alteration of the land surface resulting in a change in the topography or existing vegetative or non-vegetative soil cover, that may result in runoff and lead to an increase in soil erosion and movement of sediment off-site. Land disturbing construction activity includes , without limitation, clearing and grubbing, demolition, excavating, pit trench dewatering, filling, and grading activities.

U. "Landowner" means any person holding fee title, an easement or other interest in property, which allows the person to undertake cropping, livestock management, land disturbing construction activity or maintenance of stormwater BMPs on the property.

V. “Maintenance plan” means a legal document that provides for long-term maintenance of stormwater management practices.

W. “Maximum Extent Practicable” or “MEP” means a level of implementing best management practices in order to achieve a performance standard different from the performance standard specified in this chapter, which takes into account the best available technology, cost effectiveness, and other competing issues such as human safety and welfare, endangered and threatened resources, historic properties and geographic features. MEP allows flexibility in the way to meet the performance standards and may vary based on the performance standards and site conditions. MEP applies only when the responsible party has demonstrated to the Director of Engineering’s satisfaction that a performance standard is not achievable and that a lower level of performance is appropriate.

X. “New development” means development resulting from the conversion of previously undeveloped land or agricultural land uses.

Y. “NRCS MSE3 or MSE4 distribution” means a specific rainfall distribution developed by the United States Department of Agriculture, Natural Resources Conservation Service, using county-specific precipitation amounts from Atlas 14 for Eau Claire County, WI.

Z. “Off-site” means located outside the property boundary described in the permit application.

AA. “On-site” means located within the property boundary described in the permit application.

BB. “Ordinary high-water mark" has the meaning given in s. NR 115.03 (6), Wis. Adm. Code.

CC. “Performance standard” means a narrative or measurable number specifying the minimum acceptable outcome for a facility or practice.

DD. “Permit” means a written authorization made by the Director of Engineering to the applicant to conduct land disturbing construction activity or to discharge post-construction runoff to waters of the state.

EE. “Pollutant” has the meaning given in s. 283.01 (13), Wis. Stats.

FF. “Pollution” has the meaning given in s. 281.01 (10), Wis. Stats.

GG. “Post-construction site" means a construction site following the completion of land disturbing construction activity and final site stabilization.

HH. “Pre-development condition” means the extent and distribution of land cover types present before the initiation of land disturbing construction activity, assuming that all land uses prior to development activity are managed in an environmentally sound manner.

II. “Preventive action limit” has the meaning given in s. NR 140.05 (17), Wis. Adm. Code.

JJ. “Protective area” means an area of land that commences at the top of the channel of lakes, streams and rivers, or at the delineated boundary of wetlands, and that is the greatest of the widths defined in s. 19.30.070 A, as measured horizontally from the top of the channel or delineated wetland boundary to the closest impervious surface.

KK. “Redevelopment” means areas where development is replacing older development.

LL. “Responsible party” means the landowner or any other entity performing services to meet the requirements of this ordinance through a contract or other agreement.

MM. “Retention” means a stormwater management facility that does not have a controlled release point other than pumping, infiltration, or evaporation.

NN. “Runoff” means stormwater or precipitation including rain, snow or ice melt, or similar water that moves on the land surface via sheet or channelized flow.

OO. “Sediment” means settleable solid material that is transported by runoff, suspended within runoff or deposited by runoff away from its original location.

PP. “Site” means the entire area included in the legal description of the parcel on which the land disturbing construction activity is proposed in the permit application.

QQ. “Stormwater management plan” means a comprehensive plan designed to reduce the discharge of pollutants from stormwater, after the site has under gone final stabilization, following completion of the construction activity.

RR. “Stormwater management system plan” is a comprehensive plan designed to reduce the discharge of runoff and pollutants from hydrologic units on a regional or municipal scale.

SS. “Storm Sewer System” means all stormwater conveyance systems including, piped storm sewers, stormwater facilities, swales, ditches, streams, public ponds, lakes, and rivers.

TT. "Technical standard" means a document that specifies design, predicted performance and operation and maintenance specifications for a material, device or method.

UU. “Top of the channel” means an edge, or point on the landscape landward from the ordinary high water mark of a surface water of the state, where the slope of the land begins to be less than 12 percent continually for at least 50 feet. If the slope of the land is 12 percent or less continually for the initial 50 feet landward from the ordinary high-water mark, the top of the channel is the ordinary high-water mark.

VV. "Total maximum daily load" or "TMDL" means the amount of pollutants specified as a function of one or more water quality parameters, that can be discharged per day into a water quality limited segment and still ensure attainment of the applicable water quality standard.

WW. "TR-55" means the United States department of agriculture, natural resources conservation service (previously soil conservation service), Urban Hydrology for Small Watersheds, Second Edition, Technical Release 55, June 1986, which is incorporated by reference for this chapter.

XX. “TSS” means total suspended solids. (Ord. 7239, §3, 2017)

Chapter 19.20

CONSTRUCTION SITE EROSION CONTROL

Sections:

19.20.010 When required.
19.20.020 Erosion and sediment control performance standards for all sites.
19.20.030 Major sites - Additional performance standards.
19.20.040 Permitting requirements, procedures, and fees.
19.20.050 Technical standards.
19.20.060 Inspections.

19.20.010 When required. A. All construction sites are subject to this ordinance, except the following in subsection B below.

B. Exemptions. This ordinance does not apply to the following:

1. One and two family home construction covered by an erosion control standard in the Uniform Dwelling Code, unless the land disturbance involves major site activity described in s 19.20.030 A.(4),(5), or (6) in which case the exemption shall not apply .
2. A public work project for which the Director of Engineering has performed a preliminary review of the land disturbing activity and determined that the activity may be exempted from some, or all of the requirements of this ordinance.

19.20.020 Erosion and sediment control performance standards for all sites .

A. Erosion and Sediment Control Practices. The responsible party shall implement erosion and sediment control best management practices at each site where land disturbing activity is to occur that accomplish all of the following:

1. Prevent tracking of sediment from the construction site;
2. Prevent discharge of sediments as part of site de-watering;
3. Protect inlets, pipes, ditches, drainage ways, and downstream waters from sediment discharged from disturbed areas.
4. Stabilize stockpiles or disturbed areas left undisturbed for more than one week. Stabilization measures may include silt fence, seeding, containment berms, covering, or other approved measures.
5. Manage the use, storage, and disposal of chemicals, cement and other compounds and materials used in construction to prevent their transport by runoff.

B. Location. The BMPs shall be located so that treatment occurs before runoff exits the site,

unless an alternate location is approved by the Director of Engineering.

C. Implementation. The BMPs shall be implemented as follows:

1. Erosion and sediment control practices shall be constructed or installed before land disturbing construction activities begin.

2. Erosion and sediment control practices shall be maintained until final stabilization.

3. Final stabilization activity shall commence when land disturbing activities cease and final grade has been reached on any portion of the site.

4. Temporary stabilization activity shall commence when land disturbing activities have temporarily ceased and will not resume for a period exceeding 14 calendar days.

5. BMPs that are no longer necessary for erosion and sediment control shall be removed by the responsible party.

19.20.030 Major sites - Additional performance standards.

A. Applicability. For construction sites, except those exempted above, that meet one or more of the following conditions, the responsible party shall comply with the requirements of this section in addition to others in this chapter:

1. The land disturbing activity is part of a site plan required by s. 18.45.020; or

2. The land disturbing activity occurs on a gross aggregate area of 15,000 square feet or more; or

3. The land disturbing activity creates an additional 3,000 square feet or more of the area consisting of impervious surfaces; or

4. The land disturbing activity disturbs an existing slope in excess of 20%, or creates a slope in excess of 20% with a vertical elevation change greater than 10 vertical feet from existing ground; or

5. The land disturbing activity modifies an existing drainage way or includes filling in a closed depression; or

6. In the opinion of the Director of Engineering, the runoff from the site resulting from the land disturbing activity will exceed the safe capacity of the existing drainage facilities, or cause undue ditch erosion, or increase water pollution by scour and transport of particles, or endanger downstream property.

B. Erosion and sediment control plans. The responsible party shall prepare an erosion and sediment control plan.

1. The sediment control plan shall be prepared consistent with the procedures and requirements specified in the *City of Eau Claire Stormwater Management Guidelines*.

2. The erosion and sediment control plan shall include erosion and sediment control practices at each site where land disturbing activity occurs to accomplish to the maximum extent practicable the actions listed in s. 19.20.020 A.

3. The erosion and sediment control plan shall demonstrate compliance with the additional performance standards in subsection C. below, as applicable.

C. Additional Performance Standards. The following additional erosion and sediment control practices shall be employed:

1. Maximize maintenance of existing vegetation and topsoil, especially adjacent to surface waters.

2. Minimize soil compaction.

3. No land disturbing construction activity on slopes of 20 percent or more, unless approved as otherwise meeting the standards of this Title and implementing such additional safeguards, given the slope and site conditions, required by the Director of Engineering and approved by the City.

4. Development of spill prevention and response procedures.

5. BMPs that, by design, discharge no more than 5 tons of sediment per acre per year, or to the maximum extent practicable, minimize the sediment load carried in runoff from initial grading to final stabilization if a written explanation is provided in the erosion and sediment control plan and is accepted with or without modification by the Director of Engineering.

6. Erosion and sediment control BMPs may be combined to meet the requirements of this paragraph. Credit may be given toward meeting the sediment performance standard of this paragraph for limiting the duration or area, or both, of land disturbing construction activity, or for other appropriate mechanisms.

7. The BMPs used to comply with this section shall be located so that treatment occurs before runoff exits the site.

19.20.040 Permitting requirements, procedures, and fees.

A. Permit Required. No responsible party may commence a land disturbing activity on a major site meeting one or more of the conditions specified in s. 19.20.030 without receiving prior approval of an erosion and sediment control plan for the site and a permit in the form of a “Grading and Drainage Approval” letter from the Director of Engineering.

B. Permit Application and Fees. The responsible party for a major site shall submit an application for a permit, an erosion and sediment control plan, and shall pay an application fee as provided in the Eau Claire Fee and License Schedule.

C. Permit Application Review and Approval. The Director of Engineering shall review any complete permit application submitted with the required fee. The permit review and approval process shall follow this ordinance and the guidelines specified in the *City of Eau Claire Stormwater Management Guidelines.* Permits issued under this section may include conditions established by the Director of Engineering consistent with and deemed necessary to assurance compliance with said ordinance and guidelines and the performance standards therein.

D. Insurance/Proof of. As a condition of approval and issuance of the permit, the applicant shall provide proof of general commercial liability insurance in the amount of not less than $1,000,000, an irrevocable letter of credit, or like other guarantee acceptable to the City.

E. Permit Duration. Permits issued under this section shall be valid for one year from the date of issuance sunless extended for up to one additional year by the Director of Engineering.

F. Maintenance. The responsible party throughout the duration of the construction activities shall maintain all BMPs necessary to meet the requirements of this ordinance until the site has undergone final stabilization.

19.20.050 Technical Standards. All BMPs required for compliance with this ordinance shall meet design criteria, standards and specifications based on any of the following:

A. Design guidance and technical standards identified or developed by the Wisconsin Department of Natural Resources under subchapter V of chapter NR 151, Wis. Adm. Code.

B. Soil loss prediction tools (such as the Universal Soil Loss Equation (USLE)) when using an appropriate rainfall or runoff factor (also referred to as the R factor) or an appropriate design storm and precipitation distribution, and when considering the geographic location of the site and the period of disturbance.

C. Technical standards and methods approved by the Director of Engineering.

19.20.060 Inspections. If land disturbing construction activities are occurring, including those not requiring a permit under this ordinance, the Director of Engineering may enter the land pursuant to the provisions of s. 66.0119 (1), (2), and (3), Wis. Stats. (Ord. 7239, §4, 2017)

Chapter 19.30

STORMWATER MANAGEMENT

Sections:

19.30.010 When required.
19.30.020 Performance standards and stormwater management plan.
19.30.030 Peak runoff rate.
19.30.040 Total suspended solids.
19.30.050 Minimum building elevations.
19.30.060 Infiltration.
19.30.070 Protective areas.
19.30.080 Fueling and vehicle maintenance areas.
19.30.190 General considerations for stormwater management measures.
19.30.100 Permitting requirements, procedures, and fees.
19.30.110 Post-construction stormwater management plan certification.
19.30.120 Maintenance plan required.
19.30.130 Violation and Penalty.

19.30.010 When required. A. Land disturbing activity shall be subject to on-site detention and runoff control of stormwater and be required to submit a stormwater management plan and a site grading plan if the activity meets one or more of the following criteria, except as provided in s. 19.30.010 B:

1. The land disturbing activity is part of a site plan required by s. 18.45.020; or
2. The land disturbing activity occurs on a gross aggregate area of 15,000 square feet or more; or
3. The land disturbing activity creates an additional 3,000 square feet or more of impervious surfaces; or

4. The land disturbing activity disturbs an existing natural slope in excess of 20%, or creates a slope in excess of 20% with a vertical elevation change greater than 10 vertical feet from existing ground; or

5. The land disturbing activity modifies an existing drainage way or includes filling in a closed depression; or

6. In the opinion of the Director of Engineering, the runoff from the site resulting from the land disturbing activity while marginally below one or more of the above standards in cumulative effect is reasonably expected to exceed the safe capacity of the existing drainage facilities, cause undue erosion, increase water pollution by scour and transport or particles, or damage downstream property.

B. Exemptions. A land disturbing activity that meets any of the following criteria is exempt from the requirements of this ordinance:

1. Underground utility construction, but not including the construction of any above ground structures associated with utility construction.

2. One and two family home construction covered by a stormwater management standard in the Uniform Dwelling Code, unless the land disturbance involves a major site activity described in s 19.30.010 A (4), (5), or (6) in which case the exemption shall not apply.

3. A public work project for which the Director of Engineering has performed a preliminary review of the land disturbing activity and determined that the activity may be exempted from some, or all of the requirements of this ordinance.

C. Other Authorities. The requirements of this ordinance do not pre-empt more stringent stormwater management requirements that may be imposed by any of the following:

1. Wisconsin Department of Natural Resources administrative rules, permits or approvals including those authorized under Wis. Adm. Code and Wis. Stats.

2. Targeted non-agricultural performance standards promulgated in rules by the Wisconsin Department of Natural Resources under Wis. Adm. Code.

19.30.020 Performance standards and stormwater management plan.

A. The responsible party shall prepare a stormwater management plan as described in the City of Eau Claire stormwater management guidelines. The stormwater management plan shall include sections addressing total suspended solids reduction, peak runoff rate reduction, minimum building elevations, infiltration, protective areas, and private facility maintenance plans.

B. The Director of Engineering shall approve all stormwater management plans and calculations.

C. Maintenance of Effort. For redevelopment sites where the redevelopment will be replacing older development that was subject to post-construction performance standards of NR 151 in effect on or after October 1, 2004, the responsible party shall meet the total suspended solids reduction, peak runoff rate control, infiltration, and protective areas standards applicable to the older development or meet the redevelopment standards of this ordinance, whichever is more stringent.

19.30.030 Peak runoff rate.

A. The post-construction peak runoff rate resulting from the 3 inch, 24 hour rainfall event shall not exceed pre-development peak runoff rates for all events smaller than, and including, the 1% exceedance probability, 24 hour design rainfall event occurring over the same site.

B. Peak discharges shall be calculated using TR-55 runoff curve number methodology, SWMM, or other methods approved by the Director of Engineering. Calculations for the 1% exceedance probability, 24 hour event shall be based on Atlas 14 precipitation depths identified for Eau Claire County. Calculations for all events shall use the appropriate NRCS rainfall depth and NRCS MSE3 rainfall distribution. Pre-development conditions shall assume “good hydrologic conditions” for appropriate land covers using the curve numbers in the following table. Infill and redevelopment shall use curve numbers representative of the predevelopment land use. The meanings of “hydrologic soil group” and “runoff curve number” are as determined by TR-55.

Maximum Pre-development Runoff Curve Numbers				
	Hydrologic Soil Group			
Runoff Curve Number	**A**	**B**	**C**	**D**
Woodland	30	55	70	77
Grassland	39	61	71	78
Cropland	55	69	78	83

C. The Director of Engineering shall have the authority, exercised in accordance with accepted engineering practices and principles, to increase or decrease the allowable release rate based on the downstream conveyance system capacity and capacity of the regional stormwater facilities serving the drainage basin.

D. The Director of Engineering shall have the authority, exercised in accordance with accepted engineering practices and principles, to restrict the release rate to a rate below the pre-development 3 inch, 24-hour rainfall event in drainage areas with limited downstream conveyance systems.

E. Where on-site detention is used for runoff control, the detention facility shall be constructed to contain and/or pass the runoff of a 1% annual exceedance probability (100 year) design storm (Atlas 14/NRCS) of any duration without damage to the detention facility.

F. Plans and hydraulic computations for all structural or nonstructural measures or other protective devices to be constructed in connection with the proposed work shall be submitted by a Professional Engineer licensed to practice in Wisconsin in accordance with accepted engineering practice and requirements of this ordinance and shall include:

1. Pre-development runoff computations;
2. Estimated rate of discharge in cubic feet per second post-construction at all structural or non-structural measures and at the point of discharge from the site location for events listed in s. 19.30.030 A.
3. The pre-development storm event frequency discharge rates in cubic feet per second for events listed in s. 19.30.030 A, upon which the design of plans for the site location is based;
4. Provisions to carry runoff to the nearest adequate outlet; and
5. If drainage easements are required, documentation of perpetual maintenance and control.

G. At the discretion of the Director of Engineering, exercised in accordance with accepted engineering practices and principles, the developer shall be required to prepare plans for reducing or detaining peak discharges beyond what is required above.

19.30.040 Total suspended solids.

A. Best management practices ("BMPs") shall be designed by a Professional Engineer licensed to practice in Wisconsin in accordance with accepted engineering practice and requirements of this ordinance, installed, and maintained to control total suspended solids from parking areas, material storage areas, and roads carried in runoff from the post-construction site as follows:

TSS Reduction Standards	
Development Type	**TSS Reduction**
New Development	80 percent
In-fill Development ≥ 1 acre	80 percent
In-fill Development < 1 acre and Redevelopment	40 percent

1. BMPs shall be designed in accordance with the above table. If the design cannot achieve the applicable total suspended solids reduction specified, a written and site-specific explanation must be submitted detailing why that level of reduction is not attainable to the maximum extent practicable and propose an alternate site that shall be improved with a new or enhanced BMP by the responsible party to offset the below standards deviation at the primary site. Use of alternate sites to meet these standards may be allowed if approved, as conditioned, by the Director of Engineering to meet the overall objectives of this Title.
2. Total suspended solid reductions shall be calculated using a methodology or computer model recognized and approved by then Wisconsin Department of Natural Resources for this intended purpose.
3. The design shall be based on average annual rainfall, as compared to no runoff management controls.

19.30.050 Minimum building elevations.

A. For all lots adjacent to stormwater detention facilities, lakes, wetlands, streams, and drainage ditches, the responsible party shall identify the estimated water surface elevation during a 1% annual exceedance probability (100 year) rainfall event.

B. For lots adjacent to closed depressions that have no discharge location for tributary runoff, the responsible party shall identify the estimated water surface elevation in the closed depression during a 1% annual exceedance probability (100 year), 24 rainfall event on frozen ground including an additional runoff volume of 1.2 inches from all pervious areas to account for snow melt.

C. The responsible party must adhere to the following minimum building elevations, utilizing the City datum:

1. The lowest opening (including basement) shall be at least 2 feet above the estimated 100-year water surface elevation,
2. The lowest floor (including basement) shall be at least 3 feet above the highest local groundwater elevation,

3. All HVAC facilities shall be at least 2 feet above the estimated 100-year water surface elevation,

4. All HVAC facilities shall be at least 3 feet above the highest local groundwater elevation, and

5. The lowest opening shall be at least 2 feet above the estimated 100-year water surface elevation of emergency overflow swales.

D. The minimum building elevation requirements identified in this s. 19.30.050 A., B and C., are applicable only to structures located outside floodplains delineated by the Federal Emergency Management Agency (FEMA).

19.30.060 Infiltration. BMPs shall be designed by a Professional Engineer licensed to practice in Wisconsin, installed and maintained to infiltrate runoff to the MEP in accordance with NR 151.12(5)(c). Infiltration practices cannot be used for peak rate runoff control unless no out-fill is accessible and infiltration practices must be approved by the Director of Engineering. The Director of Engineering may, in accordance with accepted engineering practices and principles, prohibit infiltration practices in areas where retention or infiltration facilities pose a risk to infrastructure, water quality, or public safety, or downgradient properties.

19.30.070 Protective areas.

A. "Protective areas" is defined in s. 19.10.010. In this section, "protective area" does not include any area of land adjacent to any stream enclosed within a pipe or culvert, so that runoff cannot enter the enclosure at this location. Protective width varies according to resource type:

1. For lakes and rivers, 40 feet from top of bank as determined by the City Engineer.

B. This section applies to post-construction sites located within a protective area, except those areas exempted pursuant to s. 19.30.070 C. The following requirements shall be met:

1. Impervious surfaces shall be kept out of the protective area to the maximum extent practicable. The stormwater management plan shall contain a written site-specific explanation for any parts of the protective area that are disturbed during construction.

2. Where land disturbing construction activity occurs within a protective area, and where no impervious surface is present, adequate sod or self-sustaining vegetative cover of 70% or greater shall be established and maintained. The adequate sod or self-sustaining cover shall be sufficient to provide for bank stability, maintenance of fish habitat, and filtering of pollutants from upslope overland flow areas under sheet flow conditions. Non-vegetative materials, such as rock riprap, may be employed on the bank as necessary to prevent erosion, such as on steep slopes or where high velocity flow occurs.

3. Best management practices such as filter strips, swales, or wet detention basins, that are designed to control pollutants from non-point sources, may be located in the protective area.

C. This section does not apply to:

1. Except as provided in s. 19.30.020 C, redevelopment post-construction sites.
2. In-fill development areas less than one (1) acre.
3. Structures that cross or access surface waters such as boat landings, bridges and culverts.
4. Structures constructed in accordance with s. 59.692(1v), Wis. Statutes.
5. Post-construction sites from which runoff does not enter the surface water, including wetlands, without first being treated by a BMP to meet local ordinance requirements for TSS and peak runoff rate reduction, except to the extent that vegetative ground cover is necessary to maintain bank stability.

19.30.080 Fueling and vehicle maintenance areas. Vehicle fueling and maintenance areas shall have best management practices designed, installed, and maintained to contain petroleum on-site such that there is no visible petroleum sheen in runoff off-site.

19.30.090 General considerations for stormwater management measures.

A. Natural topography and land cover features such as natural swales, natural depressions, native soil infiltrating capacity, and natural groundwater recharge areas shall be preserved and used, to the extent possible, to meet the requirements of this section.

B. Emergency overland flow for all stormwater facilities shall be provided to prevent exceeding the safe capacity of downstream drainage facilities and prevent endangerment of downstream property or public safety.

C. BMP Location. To comply with the performance standards required this ordinance, BMPs may be located on−site or off−site as part of a regional stormwater device, practice or system, but shall be installed in accordance with s. NR 151.003, Wis. Adm. Code. The Director of Engineering may approve off-site management measures provided that all of the following conditions are met:

1. The Director of Engineering determines that the post-construction runoff is covered by a stormwater management system plan that is approved by the city of Eau Claire and that contains management requirements consistent with the purpose and intent of this ordinance.

2. The off-site facility meets all of the following conditions:

a. The facility is in place.

b. The facility is constructed as specified and record as-built drawings are available.

c. The facility is designed and adequately sized to provide a level of stormwater control equal to or greater than that which would be afforded by on-site practices meeting the performance standards of this ordinance.

d. The facility has a legally obligated entity responsible for its long-term operation and maintenance.

D. Where a regional treatment option exists such that the Director of Engineering exempts the applicant from all or part of the minimum on-site stormwater management requirements, the applicant shall be required to pay a fee in an amount determined in negotiation with the Director of Engineering. In determining the fee for post-construction runoff, the Director of Engineering shall consider an equitable distribution of the cost for land, engineering design, construction, and maintenance of the regional treatment option.

19.30.100 Permitting requirements, procedures, and fees.

A. Permit Required. No responsible party not exempt under s. 19.30.010 B may undertake a land disturbing activity without receiving a post-construction runoff permit in the form of a "Grading and Drainage Approval" letter from the Director of Engineering prior to commencing the proposed activity.

B. Permit Application and Fees. The responsible party shall submit a permit application to the Director of Engineering on a form provided by the Director of Engineering for that purpose. Unless otherwise exempt, a permit application must be accompanied by a stormwater management plan, a maintenance agreement and a non-refundable permit application fee as stated in the City of Eau Claire Fee and License Schedule.

C. Permit Application Review and Approval. The Director of Engineering shall review any permit application that is submitted with a stormwater management plan, maintenance agreement, and the required fee. The permit review and approval process shall follow the guidelines specified in the *City of Eau Claire stormwater management guidelines*.

D. Permit Requirements. All permits issued under this ordinance shall be subject to the conditions specified in the *City of Eau Claire stormwater management guidelines*, and holders of permits issued under this ordinance shall be deemed to have accepted these conditions.

E. Permit Conditions. Permits issued under this subsection may include conditions established by the Director of Engineering in addition to the requirements needed to meet the performance standards included in this ordinance.

F. Permit Duration. Permits issued under this section shall be valid from the date of issuance through the date the Director of Engineering notifies the responsible party that all stormwater management practices have passed the final inspection required by the *City of Eau Claire stormwater management guidelines*, unless one of the following conditions occurs:

1. work is not initiated within one year of permit issuance, or
2. work is idle for 12 consecutive months, or
3. work is not completed within 3 years of permit issuance.

G. Stop Work. The Director of Engineering may suspend or revoke a permit for violation of a permit condition, following procedures detailed in the *City of Eau Claire stormwater management guidelines* An action by the Director of Engineering to suspend or revoke this permit may be appealed to the Building Code Committee in accordance with s. 16.04.160.

19.30.110 Post construction stormwater management plan certification. Prior to acceptance by the City, or the issuance of the Final Certificate of Occupancy, the Professional Engineer responsible for the design of the stormwater facilities and the stormwater management plan shall certify that the work has been completed in accordance with the approved design, including any revisions approved by the City.

19.30.120 Maintenance plan required. A maintenance plan is required for all private stormwater management practices except those that serve one and two family residential development. The plan shall be an agreement between the City of Eau Claire and the responsible party to provide for maintenance of stormwater practices beyond the duration period of the permit. The maintenance plan shall name the party responsible for providing funding and long-term maintenance of stormwater practices installed. The maintenance plan shall be filed with the County Register of Deeds as a property deed restriction so that it

is binding upon all subsequent owners of the land served by the private stormwater management practice. The maintenance plan shall meet all provisions required in the *City of Eau Claire stormwater management guidelines*

19.30.130 Violation--Penalty. Any person or corporation violating the provisions of this chapter shall, upon conviction, be fined in a sum or not less than $100 (one hundred dollars) and not more than $1,000 (one thousand dollars) per day of violation, if applicable, plus costs of restoration, court costs and costs of prosecution. (Ord. 7239, §5, 2017)

Chapter 19.40

DISCHARGES TO THE STORM SEWER

Sections:

19.40.010 Acceptable discharges.
19.40.020 Prohibited discharges.
19.40.030 Violation--Penalty.

19.40.010 Acceptable discharges. A. Acceptable discharges to the storm sewer system include:

1. Stormwater runoff.
2. Discharges authorized by a WPDES permit.
3. Discharges meeting the performance standard established for an approved site plan.
4. Discharges not requiring a WPDES permit such as clear water wastes as defined in Section H.62.12 Wisconsin Administrative Code.

19.40.020 Prohibited discharges. A. Prohibited discharges include, but are not limited to:

1. Materials identified in 8.40.020 Storm Sewers – Prohibited Materials.
2. Materials identified in 8.40.030 Rubbish disposal – River banks-Streets.
3. Sediment.
4. Total suspended solids (TSS) in excess of thresholds established for approved site plans.
5. Petroleum products.
6. Detergents.
7. Discharges with a pH below 6.0 or in excess of 9.0.
8. Discharges with a BOD5 in excess of 15 milligrams per liter.
9. Other solid or dissolved pollutants.

19.40.030 Violation--Penalty. Any person or corporation violating the provisions of this chapter shall, upon conviction, be fined in a sum or not less than $100 (one hundred dollars) and not more than $1,000 (one thousand dollars) per day of violation, if applicable, plus costs of restoration, court costs and costs of prosecution. (Ord. 7239, §6, 2017)

TABLES

Table of Contents

Table I **SPEED LIMITS**

Table II **THROUGH STREETS**

Table III **STOP INTERSECTIONS**

Table IV **STOPS AT RAILROAD CROSSINGS**

Table V **YIELD INTERSECTIONS**

Table VI **ONE-WAY STREETS**

Table VII LEFT TURNS PROHIBITED

Table VIII PARKING PROHIBITED

Table IX PARKING DURING SPECIFIED HOURS

Table X PARKING METER LOCATIONS

Table XI TRAFFIC CONTROL SIGNALS

Table XII PARKING, STOPPING AND STANDING PROHIBITED

Table XV DISPOSITION OF ORDINANCES

TABLE I

SPEED LIMITS

Speed limits. The city council hereby determines that the statutory speed limits on the following streets or portions thereof are unreasonable, unsafe or imprudent and modifies such speed limits under authority granted by Section 349.11 of the statutes, as follows. (Ord. 3313 §II, 1972; Prior code §17.02(1)).

Speed limit thirty miles per hour. Speed limits established by Section 346.57(4)(e), (f) and (g), Wisconsin Statutes, are modified as hereinafter set forth upon the following streets or portions thereof:

Thirty miles per hour on:

Abbe Hill Drive - from Eddy Lane to LaSalle Street;
Anderson Road - from Eddy Lane to Melby Road;
Birch Street - from Germania Street east to city limits;
Brackett Avenue - from Harding Avenue to South Hastings Way;
Cameron Street - from Madison Street to west corporate limit line;
Craig Road - from Hamilton Avenue to West Clairemont Avenue/USH 12
Crescent Avenue - from Ferry Street to Interstate 94;
E. Hamilton Avenue, from Pine Lodge Road to the east city limits;
East Riverview Drive - from Riverview Drive to a point 1300 feet east of Riverview Drive;
Eddy Lane - from Western Avenue to Milton Road;
Eleventh Street - from Vine Street to Folsom Street;
Fairfax Street - from East Clairemont Avenue/USH 12 to Kirk Street;
Fairfax Street - from Highland Avenue to South Hastings Way;
Fairfax Street - from Mitscher Avenue to Golf Road;
Farwell Street - from Gray Street to Washington Street;
Ferry Street - from Crescent Avenue to Menomonie Street;
Fifth Avenue - from Water Street to Fulton Street;
Folsom Street - from North Clairemont Avenue/USH 12 to 14th Street;
Forest Street - from Madison Street to Sheridan Road;
Fourteenth Street - from Vine Street to Truax Boulevard;
Galloway Street - from Dewey Street to Hastings Place;
Gateway Drive - from South Hastings Way Frontage Road to East Hamilton Avenue;
Germania Street - from Madison Street to Birch Street;
Golf Road - from 600 ft. east of Havenwood Lane to the city limits west of Cottonwood Drive;
Graham Avenue - from Emery Street to State Street;
Hamilton Avenue, from State Street to Rudolph Road;
Hamilton Avenue, from STH 93 to Oakwood Hills Parkway;
Harding Avenue-from East Street to Lee Street;
Highland Avenue - from South Hastings Way to Fairfax Street;
Keystone Crossing - from Golf Road to Gateway Drive;
Lake Street - from Farwell Street to Fifth Avenue;
LaSalle Street - those portions within the city limits from McKinley Road to Peterson Avenue;
Locust Lane - from Eddy Lane to North Hastings Way;
London Road - from its southern end to East Clairemont Avenue/USH 12;

MacArthur Avenue - from State Street to Craig Road;
Madison Street - from Cameron Street to Bellinger Street;
Madison Street - from Farwell Street to Germania Street;
Madison Street - from Forest Street to Oxford Avenue;
Main Street - from Farwell Street to South Hastings Way;
Melby Street - from Starr Avenue to the city limits;
Menomonie Street - from Ninth Avenue to Ferry Street;
Milton Road - from Piedmont Road to Eddy Lane;
Mitscher Avenue - from Fairfax Street to Rudolph Road;
Moholt Drive - from North Clairemont Avenue/USH 12 to 14th Street
North Eddy Street - 800 block;
North Lane - from Neptune Avenue to Starr Avenue;
Oakwood Hills Parkway - from E. Hamilton Avenue to Oakwood Mall Drive;
Old Wells Road- from Selma Street to STH 312/North Crossing;
Oxford Avenue - from Madison Street to Platt Street;
Piedmont Road - from Starr Avenue to Milton Road;
Platt Street - from Oxford Avenue to Third Street;
Riverview Drive - between Donna Court and E. Riverview Drive;
Riverview Drive - between 600 feet south of Wander Court and 450 feet north of Marquette Street;
Robin Road - from Melby Street to Sundet Road;
Rudolph Road - from Brackett Avenue to Golf Road;
Seymour Road - from North Hastings Way to Soley Avenue;
Sheridan Road - from North Eddy Street to Forest Street;
Starr Avenue - from Birch Street to Melby Street;
State Street - from South Barstow Street to Hamilton Road;
Stein Boulevard - from West Clairemont Avenue/USH 12 to Farr Court;
Third Street - from Platt Street to Truax Boulevard;
Truax Boulevard - from Third Street to 14th Street;
South Hastings Way from Gateway Drive west to the city limits;
Vine Street - from Third Street to the city limits;
Washington Street - from Harding Avenue to State Street;
Water Street - from Sixth Avenue to Ninth Avenue;
West Hamilton Avenue - from State Street to Hendrickson Drive/STH 37;
White Avenue - from Anderson Drive to Sundet Road.

(Ord. 7289, 2018; Ord. 7224 §1, 2017; Ord. 6941, 2010; Ord. 6763, 2007; Ord. 6478, 2004; Ord. 6413, 2003; Ord. 6353, 2002; Ord. 6122, 2000; Ord. 5998, 1999; Ord. 5970, 1999; Ord. 5591, 1996; Ord. 5269 §1, 1992; Ord. 5060 §1, 1990; Ord. 4780 §2, 1987; Ord. 4723, §1, 1987; Ord. 4719, 1987; Ord. 4671 §1, 1986; Ord. 4526 §1, 1985; Ord. 4522 §2, 1985; Ord. 4050 §1, 1980; Ord. 4016 §1, 1979; Ord. 3868, 1978; Ord. 3813, 1977; Ord. 3795 §1(part), 1977; Ord. 3758, 1977; Ord. 3556 (part), 1975; Ord. 3549 §§1 and 2, 1975; Ord. 3545 (part), 1975; Ord. 3519 §1, 1975; Ord. 3493 §1, 1974; Ord. 3468, 1974; Ord. 3452 §1, 1974; Ord. 3400 §I, 1973; Ord. 3356 §1, 1973; Ord. 3313 §III (part), 1972; Ord. 3096 §I, 1969; Ord. 3078 §I, 1969; Ord. 4277 §1, 1982; prior code §17.02(2)(a)).

Speed limit increased to thirty-five miles per hour.

Thirty-five miles per hour on:

Airport Road - from Neptune Avenue to Iona Beach Road;
Golf Road - from 600 ft. east of Havenwood Lane to USH 53;
South Hastings Way - from East Clairemont Avenue/USH 12 to the north end of the Eau Claire River Bridge;
Jeffers Road - from Truax Boulevard to north city limits;
Mondovi Road - from West Clairemont Avenue to west city limits;
Oakwood Hills Parkway - from Golf Road to Oakwood Mall Drive;
Oakwood Mall Drive - from Oakwood Hills Parkway to Mall Property;
Prairie Lane - from Jeffers Road to Prospect Drive;
Riverview Drive - from Dellview Street to East Riverview Drive, except upon those parts of Riverview Drive lying between 600 feet south of Wander Court and 450 feet north of Marquette Street and lying between Donna Court and E. Riverview Drive;
Short Street, from Ferry Street to Hendrickson Drive/STH 37;
Truax Boulevard - from North Clairemont Avenue/USH 12 to 14th Street;
Western Avenue - from Seymour Road north to Eddy Lane.

(Ord. 7289, 2018; Ord. 7224 §2, 2017; Ord. 6478, 2004; Ord. 6067, 2000; Ord. 5939, 1999; Ord. 4933, 1989; Ord. 4723 §1, 1987; Ord. 4671 §1, 1986; Ord. 4522 §2, 1985; Ord. 3928, 1978; Ord. 3795 §1(part), 1977; Ord. 3609 1976; Ord. 3544 (part), 1975; Ord. 3542 §2, 1974; Ord. 3313 §III (part), 1972; Ord. 4277 §2, §3, 1982; prior code §17.02(2)(b)).

Speed limit increased to forty miles per hour.

Forty miles per hour on:

South Hastings Way Frontage Road, from Pine Lodge Road to 1,275 feet southeast of Horlacher Lane

(Ord. 7224 §3, 2017; Ord. 6067, 2000; Ord. 4526 §1, 1985; Ord. 4098, 1980).

Speed limit increased to forty-five miles per hour.

Forty-five miles per hour on:

South Hastings Way (U.S. Highway 53) from the south end of the Eau Claire River Bridge to a point 200 feet north of Seymour Road;

Clairemont Avenue/USH 12 from the easterly city limits westerly and northerly to its intersection with Park Ridge Drive.

(Ord. 7224 §4, 2017; Ord. 3493 §2, 1974; Ord. 3313 §III(part), 1972; Prior code §17.02 (2)(c)).

Speed limit decreased to fifteen miles per hour.

Fifteen miles per hour on:

(Lower campus) The westerly and southerly extension of Garfield Avenue to University Drive on upper campus;

Within any public school parking lot within the city of Eau Claire. (Ord. 3510 §2, 1975; Ord. 3313 §III (part), 1972; Prior code §17.02(3)(a)).

Thorp Commons from Summit Avenue to Gilbert Avenue. (Ord 6922, § 2, 2010).

Speed limit decreased to forty-five miles per hour.

Forty-five miles per hour on:

North Clairemont Avenue/USH 12 from its intersection with Park Ridge Drive northerly and westerly to the city limits. (Ord. 7224 §4, 2017; Ord. 3957, 1979; Ord. 3313 §III(part), 1972; Prior code §17.02(2)(d)).

Speed limit increased to fifty miles per hour.

Fifty miles per hour on:

North Hastings Way from a point 200 feet north of Seymour Road to the north city limits.

(Ord. 7224 §5, 2017; Ord. 3313 §III(part), 1972: Prior code §17.02(2)(e)).

Speed limits decreased to fifteen miles per hour. With the approval of the State Highway Commission the speed limits set forth in Section 346.57 (4)(e), (f) and (g), Wisconsin Statutes, are decreased as hereinafter set forth upon the following streets or portions thereof:

Fifteen miles per hour on:

(Lower campus) The westerly and southerly extension of Garfield Avenue to University Drive on upper campus;

Within any public school parking lot within the city of Eau Claire. (Ord. 3510 §2, 1975; Ord. 3313 §III(part), 1972; Prior code §17.02(3)(a)).

Speed limit decreased to twenty-five miles per hour.

Twenty-five miles per hour on:

Grover Road, from Stein Boulevard to the west end;
Sundet Road, from White Avenue to the cul-de-sac east of Michaud Street;
(Upper campus) The entire length of University Drive;
(Upper campus) The entire length of Hendrickson Drive;
(Upper campus) The entire length of Heights Drive;
(Upper campus) The entire length of Craig Road.
(Ord. 6123, 2000; Ord. 5999, 1999; Ord. 3313 §III(part), 1972; Prior code §17.02(3)(b)).

TABLE II

THROUGH STREETS

Through highways designated. In the interest of public safety and pursuant to Section 349.07, Wisconsin Statutes, the following streets or portions thereof are declared to be through highways, and traffic signs or signals giving notice thereof shall be erected by the traffic engineer in accordance with Title 10:

Abbe Hill Drive from Eddy Lane to North Crossing;
Abbe Hill Drive from North Crossing to Eddy Lane;
Anderson Drive for its entire length;
Barstow Street from Madison Street to Washington Street, both inclusive;
Bellinger Street from Platt Street to Chestnut Street, both inclusive;
Birch Street from North Dewey Street to Germania Street; from Germania Street to the west ramp of Highway 53; and from the east frontage road to Highway 53 to the east city limits;
Brookline Avenue from Winsor Drive to Seymour Road;
Cameron Street from Bellinger Street to west city limits;
Clairemont Avenue, for its entire length;
Crescent Avenue from west city limits to Ferry Street;
Damon Street from STH 93 to Oakwood Hills Parkway;
Dewey Street from Wisconsin Street to Gibson Street, both inclusive;
Dewey Street from Main Street to Jones Street;
Dewey Street from South Eddy Street to Division Street, including Division Street;
East Lexington Boulevard from Fairfax Street except at its intersection with Patton Street (westbound traffic only), Rudolph Road and Keith Street;
Eddy Lane from Starr Avenue to Milton Road, including Milton Road;
Eddy Lane from Hope Avenue to North Hastings Way;
Eddy Lane from North Hastings Way to Locust Lane;
Eddy Lane from Starr Avenue to Hastings Way;
Eddy Lane from Hastings Way to Locust Lane;
Eddy Street from Dewey Street to Sheridan Road;
Eleventh Street from Cameron Street to Vine Street;
Eleventh Street from Folsom Street to Fourteenth Street;
Eleventh Street from Vine Street to Folsom Street;
Fairfax Street from Kirk Street to East Clairemont Avenue;
Fairfax Street from East Clairemont Avenue to Corona Avenue;
Fairfax Street from East Hamilton Avenue to Golf Road;
Fairfax Street from Brackett Avenue to Highland Avenue;
Farwell Street from Madison Street to Gibson Street, including Gibson Street;
Farwell Street from Gray Street to Washington Street, including Gray Street;
Farwell Street from Washington Street to Garfield Avenue;
Fenwick Avenue from Margaret Street to South Hastings Way;
Ferry Street from Menomonie Street to its southern terminus;
Fifth Avenue from Water Street to Chestnut Street;
First Avenue from Water Street to West Grand Avenue;
First Avenue from West Grand Avenue to Randall Street;
First Street from Platt Street to Third Street;
Florence Avenue from Cameron Street to Vine Street;
Forest Street from East Madison Street to George Street, including George Street;
Folsom Street, from N. Clairemont Avenue to Fourteenth Street;
Galloway Street from Dewey Street to Hastings Place;
Gateway Drive from House Road to Prill Road (CTH “AA”);
Gateway Drive from Prill Road (CTH “AA”) to E. Hamilton Avenue;
Germania Street from East Madison Street to Birch Street;
Golf Road from Cottonwood Drive to State Highway 93;

Graham Avenue from Eau Claire Street to Washington Street;
Grand Avenue from Dodge Street to Dewey Street, both inclusive;
Grand Avenue from First Avenue to Fifth Avenue;
Grand Avenue from Fifth Avenue to Seventh Avenue, including Seventh Avenue;
Hamilton Avenue from Rudolph Road to State Street;
Harding Avenue from Brackett Avenue to Washington Street;
Hastings Place from Galloway Street to Birch Street;
Hastings Way from Melby Road to Main Street, including Melby Road;
Hastings Way from Main Street to Brackett Avenue, including Brackett Avenue;
Highland Avenue from Margaret Street to Chauncey Street;
Highland Avenue from South Hastings Way to the city limits;
Highland Avenue from South Hastings Way to Margaret Street;
House Road from Gateway Drive to Prill Road (CTH "AA");
Huebsch Boulevard from Emery Street to Chauncey Street;
Jeffers Road from Truax Boulevard to north city limits;
Keith Street from East Clairemont Avenue to Brackett Avenue;
Keith Street from Brackett Avenue to Highland Avenue, except at its intersection with Fenwick Avenue;
Jones Street from Graham Avenue to Farwell Street;
Lake Street from the west end of Veterans Memorial Bridge to Fifth Avenue;
Locust Lane from Eddy Lane to East Frontage Road on North Hastings Way;
London Road from E. Hamilton Avenue to Golf Road;
London Road from Clairemont Avenue to East Hamilton Avenue;
MacArthur Avenue from State Street to Stein Boulevard;
MacArthur Avenue from Stein Boulevard to Craig Road;
Madison Street from Forest Street to Hobart Street, both inclusive;
Madison Street from Bellinger Street to North Oxford Avenue, including North Oxford Avenue;
Madison Street from Germania Street to Putnam Street;
Main Street from Farwell Street to South Hastings Way;
Mall Drive from Henry Avenue to East Hamilton Avenue;
Margaret Street from Main Street to Harding Avenue;
Melby Street for its entire length;
Menomonie Street from Fifth Avenue to Ninth Avenue;
Menomonie Street from Tenth Avenue to Ferry Street;
Milton Road from Eddy Lane to Piedmont Road;
Mitscher Avenue between Rudolph Road and Fairfax Street;
Mitscher Avenue from Nimitz Street to Rudolph Road;
Moholt Road from Clairemont Avenue to Fourteenth Street;
Nimitz Street from Hamilton Avenue to the city limits;
Nimitz Street from Hamilton Avenue to Lexington Boulevard;
North Lane from Starr Avenue to Anderson Drive;
North Lane from Starr Avenue to the west;
Oxford Avenue from West Madison Street to Platt Street;
Piedmont Road from Wellington Drive West to Starr Avenue;
Platt Street from North Oxford Avenue to Bellinger Street;
Platt Street from Bellinger Street to Third Street;
Riverview Drive from Starr Avenue to city limits;
Robin Road from Melby Street to Sundet Road;
Rudolph Road from Brackett Avenue to Clairemont Avenue;
Rudolph Road from Clairemont Avenue to Mitscher Avenue;
Rudolph Road from Mitscher Avenue to Golf Road;
Seventh Street from Cameron Street to Vine Street;
Seventh Street from Vine Street to Folsom Street;
Seymour Road from North Hastings Way to east city limits;
Sheridan Road from Eddy Street to Oak Park Avenue, including Oak Park Avenue;
Short Street from Hendrickson Drive to Ferry Street;
Skeels Avenue from Rudolph Road to Fairfax Street;
South Dewey Street from Main Street to East Madison Street;
Starr Avenue from Eddy Lane to Birch Street;
Starr Avenue from Melby Road to Eddy Lane, including Melby Road;
State Street from Hamilton Avenue south to the city limits;
State Street from Washington Street to Hamilton Avenue;
Stein Boulevard from Hamilton Avenue to Grover Road;

Stein Boulevard from MacArthur Avenue to Hamilton Avenue;
Stein Boulevard from West Clairemont Avenue to MacArthur Avenue;
Summer Street from Main Street to Huebsch Boulevard;
Summit Avenue from Water Street Bridge east to South Farwell Street;
Sundet Road from White Avenue to Michaud Street;
Talmadge Street from Main Street to Emery Street;
Third Street from Platt Street to Truax Boulevard;
Third Street from Truax Boulevard to Garden Street;
Third Street from Truax Boulevard to the Chicago Northwestern Railroad Bridge;
Truax Boulevard from Third Street to N. Clairemont Avenue (USH 12);
Washington Street from State Street to Harding Avenue;
Water Street from First Avenue to Tenth Avenue, including First Avenue;
West Hamilton Avenue from State Street to Stein Boulevard;
West Hamilton Avenue from Stein Boulevard to Hendrickson Drive (STH 37);
Western Avenue from Seymour Road to Highway 53, except at its intersection with Eddy Lane;
Westover Road from State Street to Stein Boulevard;
White Avenue from North Lane to Melby Street;
White Avenue from Melby Street to Sundet Road.

(Ord. 6850, 2008; Ord. 6793, 2007; Ord. 6736, 2006; Ord. 6619, 2005; Ord. 6544, 2004; Ord. 6452, 2003; Ord. 6228, 2001; Ord. 6086, 2000; Ord. 5893, 1998; Ord. 5524 §1, 1995; Ord. 5358 §1, 1993; Ord. 5269 §2, 1992; Ord. 5073 §1, 1990; Ord. 5060 §2, 1990; Ord. 4924 §1, 1989; Ord. 4872 §1, 1988; Ord. 4850 §1, 1988; Ord. 4641 §1, 1986; Ord. 4582 §2, 1985; Ord. 4566 §2, 1985; Ord. 4489 §1, 1984; Ord. 4214 §1, 1981; Ord. 4095 §1, 1980; Ord. 4073 §1, 1980; Ord. 4050 §2, 1980; Ord. 4024 §1, 1979; Ord. 3801 §1, 1977; Ord. 3779 §1, 1977; Ord. 3666 §1, 1976; Ord. 3598 §§1 and 2, 1976; Ord. 3557 §3, 1975; Ord. 3504 §1, 1975; Ord. 3503 §1, 1975; Ord. 3496 §1, 1975; Ord. 3463 §1, 1974; Ord. 3348 §I, 1973; Ord. 3347 §I, 1973; Ord. 3316 §I, 1972; Ord. 3302 §I, 1972; Ord. 3290 §I, 1972; Ord. 3223 §§I, II, 1971; Ord. 3191 §§I, II, III, 1971; Ord. 3147 §I, 1970; Ord. 3072 §I, 1969; Ord. 4260 §1, 1982; Ord. 4310 §1, 1982: prior code §17.03(1)).

TABLE III

STOP INTERSECTIONS

Stop intersections. All vehicles shall stop behind the crosswalk at the intersection of the following named streets when proceeding as indicated:

Abbe Hill Drive and North Crossing, when entering from the north on Abbe Hill Drive;
Addison Avenue and Barron Street when entering from the north and south on Barron Street;
Addison Avenue and N. Eddy Street when entering from the south on N. Eddy Street;
Agnes Street and Altoona Avenue, when entering from the north and south on Agnes Street;
Agnes Street and Badger Avenue, when entering from the north and south on Agnes Street;
Agnes Street and Emery Street, when entering from the north and south on Agnes Street;
Agnes Street and Hogeboom Avenue, when entering from the east and west on Hogeboom Avenue;
Agnes Street and Hoover Avenue, when entering from the east and west on Hoover Avenue;
Agnes Street and Laurel Avenue, when entering from the east and west on Laurel Avenue;
Agnes Street and Lyndale Avenue, when entering from the east and west on Lyndale Avenue;
Agnes Street and Ohm Avenue, when entering from the north on Agnes Street;
Agnes Street and Sherwin Avenue, when entering from the east and west on Sherwin Avenue;
Agnes Street and Valmont Avenue, when entering from the north and south on Agnes Street;
Airport Road and Riverview Drive when entering from the west on Riverview Drive;
Alf Street and Miller Street when entering from the west on Alf Street;
Alpine Road and Losan Avenue, when entering from the east on Alpine Road;
Anderson Drive and Sundet Road, when entering from the south on Anderson Drive;
Arlene Place and Florence Avenue, when entering from the east and west on Arlene Place;
Babcock Street and Madison Street when entering from the north and south on Babcock Street;
Babcock Street and Randall Street when entering from the north on Babcock Street;
Balcom Street and Summit Street, when entering from the north on Balcom Street;
Barland Street and Grove Street, when entering from the north on Grove Street;
Barland Street and McGraw Street, when entering from the north on McGraw Street;
Barland Street and Winter Street, when entering from the north on Winter Street;
Barland Street and Summer Street when entering from the north and south on Summer Street;
Barstow Street and Elm Street when entering from the east and west on Elm Street;

Barstow Street and Grand Avenue when entering from the east or west on Grand Avenue;
Barstow Street at Jones Street when entering from the south on Barstow Street;
Barstow Street and Main Street on all approaches;
Barstow Street and Oak Street when entering from the north and south on Barstow Street;
Barstow Street and William Street when entering from the east and west on William Street;
Bauer Street and Harlem Avenue when entering from the east or west on Bauer Street;
Bauer Street and Vernon Street when entering from the east and west on Bauer Street;
Bell Street and Florence Avenue when entering from the east and west on Bell Street;
Bellevue Avenue and E. Madison Street, when entering from the south on Bellevue Avenue;
Bellevue Avenue and Galloway Street when entering from the north on Bellevue Avenue;
Bellevue Avenue and Holm Avenue when entering from the north on Holm Avenue;
Bellevue Avenue and Spring Street when entering from the east or west on Spring Street;
Bellevue Avenue-Wagner Avenue-Starr Avenue intersection when entering from the west on Bellevue Avenue, from the east on Wagner Avenue, and from the north on Starr Avenue;
Bellinger Street (realigned) and Mappa Street (realigned), when entering the intersection of Bellinger Street from the southwest;
Bellinger Street and Platt Street when entering from the south on Bellinger Street;
Beverly Hills Drive and Henry Avenue when entering from the north and south on Beverly Hills Drive;
Birch Street and Dewey Street, when entering from the east on Birch Street, except for vehicles making a right turn;
Birch Street and Germania Street, the easterly intersection, when entering from the west on Birch Street;
Birch Street and Germania Street, the westerly intersection, when entering from the north on Germania Street;
Bradley Avenue and Nimitz Street when entering from the east on Bradley Avenue;
Brentwood Terrace and Brookline Avenue when entering from the west on Brentwood Terrace;
Brian Street and Alf Street when entering from the north on Alf Street;
Brian Street and Garner Street when entering from the south on Garner Street;
Brian Street and Lever Street, when entering from the south on Lever Street;
Brian Street and Miller Street when entering from the north on Miller Street;
Brian Street and STH 93 East Frontage Road when entering from the south on the Frontage Road;
Broadway Street and Sixth Avenue when entering from the east and west on Broadway Street;
Broadway Street and Seventh Avenue, when entering from the north and south on Seventh Avenue;
Broadway Street and Eighth Avenue, when entering from the east and west on Broadway Street;
Brookline Avenue and Dedham Street when entering from the west on Dedham Street;
Brookline Avenue and Deerfield Drive when entering from the west on Deerfield Drive;
Brookline Avenue and Essex Street when entering from the east and west on Essex Street;
Brookline Avenue and Northwoods Lane, when entering from the west on Brookline Avenue;
Buffington Drive and Park Ridge Drive, when entering from the east on Buffington Drive;
Calumet Road and Moholt Road when entering from the north on Calumet Road;
Calumet Road and W. Mead Street, when entering from the north and south on Calumet Road;
Cameron Street and Madison Street, when entering from the northeast on Cameron Street;
Cameron Street and North Oxford Avenue when entering from the west on Cameron Street;
Candell Street and Ferry Street when entering from the west on Candell Street;
Catherine Street and Second Avenue when entering from the east on Catherine Street;
Central Street and Oxford Avenue when entering from the east and west on Central Street;
Central Street and Second Avenue when entering from the west on Central Street;
Centre Street and Omaha Street when entering from the north on Centre Street;
Centre Street and Summit Street when entering from the north and south on Centre Street;
Centre Street and Union Pacific Railroad Tracks, when entering from the north and south on Centre Street;
Chapin Street and Altoona Avenue, when entering from the north and south on Chapin Street;
Chapin Street and Sherwin Avenue, when entering from the west on Sherwin Avenue;
Chauncey Street and Altoona Avenue, when entering from the east on Altoona Avenue;
Chauncey Street and Barland Street, when entering from the west on Barland Street;
Chauncey Street and Belmont Avenue, when entering from the west on Belmont Avenue;
Chauncey Street and Emery Street when entering from the east and west on Emery Street;
Chauncey Street and Highland Avenue when entering from the east on Highland Avenue;
Chauncey Street and Hogeboom Avenue, when entering from the east on Hogeboom Avenue;
Chauncey Street and Lyndale Avenue, when entering from the east on Lyndale Avenue;
Chauncey Street and Sherwin Avenue, when entering from the east on Sherwin Avenue;
Chauncey Street at Badger Avenue and Huebsch Boulevard when entering from the north or south on Chauncey Street;

Chestnut Street and Bellinger Street, when entering from the north on Bellinger Street;
Chestnut Street and Fifth Avenue, when entering from the west on Chestnut Street;
Chestnut Street and Sixth Avenue when entering from the south on Sixth Avenue;
Chippewa Street and Sixth Avenue when entering from the east and west on Chippewa Street;
Chippewa Street and Seventh Avenue, when entering from the north and south on Seventh Avenue;
Chippewa Street and Eighth Avenue, when entering from the east and west on Chippewa Street;
Clairemont Avenue north frontage road and the access road from Clairemont Avenue (located approximately 1,000 feet west of Craig Road) when entering from the east and west on the frontage road;
Clairemont Avenue North Frontage Road and Craig Road, when entering from the east and west on the Clairemont Avenue North Frontage Road;
Clairemont Avenue North Frontage Road and Stein Boulevard, when entering from the east and west on the Clairemont Avenue North Frontage Road;
Clairemont Avenue Parkway and Clairemont Avenue ramp (west of Blakeley Avenue) when entering from the east and west on Clairemont Avenue Parkway;
Clairemont Avenue South Frontage Road and Stein Boulevard when entering from the west on the frontage road;
Cleveland Street and Pitt Street, when entering from the west on Cleveland Street;
Cochrane Street and Summit Street, when entering from the north on Cochrane Street;
Congress Street and Sixth Avenue when entering from the east and west on Congress Street;
Cottonwood Drive and Golf Road when entering from the north and south on Cottonwood Drive;
Craig Road and Hamilton Avenue, when entering from the east and west on Hamilton Avenue;
Craig Road and International Drive, when entering from the north (right turn no stop) on Craig Road;
Craig Road and Lasker Drive on all approaches;
Crestview Drive and Meridian Heights Drive when entering from the north and south on Meridian Heights Drive;
Crestwood Road and W. Mead Street, when entering from the north and south on Crestwood Road;
Culver Street and Emery Street, when entering from the south on Culver Street;
Cummings Avenue and Mitscher Avenue when entering from the north and south on Cummings Avenue;
Damon Street and Boardwalk Street, when entering from the north on Boardwalk Street;
Damon Street and Oakwood Hills Parkway, when entering from the west on Damon Street;
Davey Street and Robin Road when entering from the west on Davey Street;
Declaration Drive and LaSalle Street when entering from the south on Declaration Drive;
Dewey Street and Lake Street when entering from the west on Lake Street;
Dewey Street and Seaver Street when entering from the west on Seaver Street;
Dewey Street and Wisconsin Street when entering from the north or south on Dewey Street;
Dewey Street and Galloway Street when entering from the north or south on Dewey Street;
Dewey Street and Grand Avenue when entering from the east or west on Grand Avenue;
Dodge Street and Jones Street, when entering from the east on Jones Street;
Dodge Street and Seaver Street, when entering from the east on Seaver Street;
Dodge Street and Seaver Street, when entering from the east and west on Seaver Street;
Dogwood Drive and Rudolph Road when entering from the west on Dogwood Drive;
Dohlby Drive and Moholt Drive, when entering from the north and south on Dohlby Drive;
Dorbe Street and Stein Boulevard when entering from the west on Dorbe Street;
Drury Avenue and Dellview Street when entering from the north on Drury Avenue;
East Clairemont Avenue north service road and Otter Road, when entering from the west on the service road;
East Frontage Road on North Hastings Way and Locust Lane when entering from the south on Locust Lane;
East Frontage Road on North Hastings Way and Dale Road when entering from the east on Dale Road;
East Frontage Road on North Hastings Way and Delbert Road when entering from the north or south on the East Frontage Road;
East Frontage Road on North Hastings Way and Potter Road when entering from the east on Potter Road;
East Frontage Road on North Hastings Way and Pinehurst Road when entering from the east on Pinehurst Road;
East Frontage Road on North Hastings Way and Landon Street when entering from the east on Landon Street;
East Frontage Road on North Hastings Way and Eddy Lane when entering from the north or south on the East Frontage Road;
East Frontage Road on North Hastings Way and LaSalle Street when entering from the north on the East Frontage Road;

East Frontage Road on North Hastings Way and LaSalle Street when entering from the south on the East Frontage Road;

East Frontage Road on North Hastings Way and Seymour Road when entering from the north or south on the East Frontage Road;

East Frontage Road on North Hastings Way and Shale Ledge Road when entering from the east on Shale Ledge Road;

East Frontage Road on North Hastings Way and Somona Parkway when entering from the east on Somona Parkway;

East Frontage Road on North Hastings Way and Mountain View Place when entering from the east on Mountain View Place;

East Frontage Road on North Hastings Way and Birch Street when entering from the north or south on the East Frontage Road, or from the east on Birch Street;

East Frontage Road on North Hastings Way and Presto entrance when entering from the south on the East Frontage Road;

East Frontage Road on North Hastings Way and Northbound Ramp to U.S. Highway 53 (located between Somona Parkway and Shale Ledge Road) when entering from the north on the East Frontage Road;

East Frontage Road on North Hastings Way and Trinity Street, when entering from the east on Trinity Street;

East Frontage Road on North Hastings Way and Hiawatha Street, when entering from the east on Hiawatha Street;

East Grand Avenue and South Farwell Street when entering from the east or west on East Grand Avenue;

East Hamilton Avenue and Mall Drive (north leg) when entering from the west on East Hamilton Avenue;

East Hamilton Avenue and Mall Drive (south leg) when entering from the south on Mall Drive;

East Lexington Boulevard and Agnes Street when entering from the north or south on Agnes Street;

East Lexington Boulevard and Beverly Hills Drive, when entering from the west on East Lexington Boulevard;

East Lexington Boulevard and Carney Street when entering from the north on Carney Street;

East Lexington Boulevard and East Grant Avenue when entering from the south on East Grant Avenue;

East Lexington Boulevard and East MacArthur Avenue when entering from the south on East MacArthur Avenue;

East Lexington Boulevard and East Tyler Avenue when entering from the south on East Tyler Avenue;

East Lexington Boulevard and Kay Street when entering from the south on Kay Street;

East Lexington Boulevard and Nimitz Street when entering from the south on Nimitz Street;

East Lexington Boulevard and Polk Avenue when entering from the south on Polk Avenue;

East Lexington Boulevard and Patton Street when entering from the east on East Lexington Boulevard, when entering from the south on Patton Street, and when entering from the north on Patton Street and intending to turn left or to continue straight across the intersection;

East Prairie Lane and Arrowhead Drive when entering from the west on East Prairie Lane;

Echo Valley Drive and S. Oakwood Hills Parkway, when entering from the south on Echo Valley Drive;

Eddy Lane and Guthrie Road when entering from the north on Guthrie Road;

Eddy Lane and Phoenix Lane when entering from the north on Phoenix Lane;

Eddy Lane and Wellington Drive East when entering from the north or south on Wellington Drive East;

Eddy Lane and Comet Avenue when entering from the north on Comet Avenue;

Eddy Lane and Hartwood Drive, when entering from the north on Hartwood Drive;

Eddy Lane and Neptune Avenue when entering from the north or south on Neptune Avenue;

Eddy Lane and Uranus Avenue when entering from the north or south on Uranus Avenue;

Eddy Lane and Saturn Avenue when entering from the north or south on Saturn Avenue;

Eddy Lane and Jupiter Avenue when entering from the north or south on Jupiter Avenue;

Eddy Lane and Mars Avenue when entering from the north or south on Mars Avenue;

Eddy Lane and Venus Avenue when entering from the north or south on Venus Avenue;

Eddy Lane and Mercury Avenue when entering from the north or south on Mercury Avenue;

Eddy Lane and Moon Avenue when entering from the south on Moon Avenue;

Eddy Lane and Starr Avenue when entering from the east or west on Eddy Lane or from the north or south on Starr Avenue;

Eddy Lane and Hope Avenue when entering from the north on Hope Avenue;

Eddy Lane and Kilbourne Avenue when entering from the north on Kilbourne Avenue;

Eddy Lane and Anderson Drive when entering from the north on Anderson Drive;

Eddy Lane and Western Avenue when entering from the north or south on Western Avenue;

Eddy Lane and Northland Drive when entering from the south on Northland Drive;

Eddy Lane and Wedgewood Avenue when entering from the north on Wedgewood Avenue;

Eddy Lane and Locust Lane when entering from the east on Eddy Lane;

Eighth Avenue and Niagara Street, when entering from the north and south on Eighth Avenue;

Eisenhower Street and E. Fillmore Avenue, when entering from the north or south on Eisenhower Street or from the east or west on Fillmore Avenue;

Eisenhower Street and Taft Avenue, when entering from the east on Taft Avenue;

Eldorado Boulevard (north leg) and Imperial Circle, when entering from the north on Eldorado Boulevard;

Eldorado Boulevard and West Hamilton Avenue when entering from the north on Eldorado Boulevard;

Eldorado Boulevard and MacArthur Avenue when entering from the south on Eldorado Boulevard;

Elizabeth Street and Second Avenue when entering from the east on Elizabeth Street;

Ellis Street and Westover Road when entering from the south on Ellis Street;

Elm Street and Hobart Street when entering from the north and south on Hobart Street;

Emery Street and Graham Avenue when entering from the east or west on Emery Street;

Emery Street and Dodge Street when entering from the east and west on Emery Street;

Enterprise Street and Sherwin Avenue when entering from the north and south on Enterprise Street;

Enterprise Street and Highland Avenue when entering from the north on Enterprise Street;

Esmond Road and Kirk Street, when entering from the northeast or west on Kirk Street and from the southeast on Esmond Road;

Evergreen Lane and Westover Road when entering from the north on Evergreen Lane;

Fairfax Avenue and Valmont Avenue when entering from the west on Valmont Avenue;

Fairfax Avenue and Fenwick Avenue when entering from the west on Fenwick Avenue;

Fairfax Street and Arthur Street when entering from the east on Arthur Street;

Fairfax Street and Damon Street when entering from the east on Damon Street;

Fairfax Street and Golf Road when entering from the north and south on Fairfax Street;

Fairfax Street and Meadow Lane, when entering from the east and west on Meadow Lane;

Fairfax Street and Meadow Lane when entering from the north and south on Fairfax Street;

Fairfax Street and Mitscher Avenue when entering from the west on Mitscher Avenue;

Fairfax Street and Ridgeview Drive when entering from the east on Ridgeview Drive;

Fairfax Street and Sessions Street when entering from the east on Sessions Street;

Fairfax Street and Tony Court when entering from the east on Tony Court;

Farr Court and Stein Boulevard when entering from the east on Farr Court;

Farwell Street and Gibson Street when entering from the west on Gibson Street;

Fear Street and Mitscher Avenue when entering from the north on Fear Street;

Fenner Avenue and Warden Street, when entering from the west on Fenner Avenue;

Fenwick Avenue and Keith Street, when entering from the east and west on Fenwick Avenue;

Ferry Street and Crescent Avenue, when entering from the north or south on Ferry Street, with southbound Ferry Street designated as right turn, no stop;

Ferry Street and Crescent Avenue when entering from the west on Crescent Avenue;

Ferry Street and Short Street when entering from the east;

Fifteenth Street and Moholt Road when entering from the south on Fifteenth Street;

Fillmore Avenue and May Street when entering from the north and south on May Street and from the east and west on Fillmore Avenue;

Fillmore Avenue and Nimitz Street when entering from the east and west on Fillmore Avenue;

Fillmore Avenue and Patton Street, when entering from the east or west on Fillmore Avenue;

First Avenue at Lake Street when entering from the north or south on First Avenue;

First Avenue and Second Avenue when entering from the north on First Avenue;

First Street and Third Street, when entering from the south-east on First Street;

Fleming Avenue and Emery Street, when entering from the south on Fleming Avenue;

Florence Avenue and Necessity Street, when entering from the east and west on Necessity Street;

Florence Avenue and Raedel Road, when entering from the east and west on Raedel Road;

Folsom Street and Fourteenth Street, when entering from the east or west on Folsom Street or from the north or south on Fourteenth Street;

Folsom Street and Mercantile Drive, when entering from the north or south on Mercantile Drive;

Folsom Street and Old Orchard Road, when entering from the north on Old Orchard Road;

Folsom Street and Third Street, when entering from the west on Folsom Street;

Forest Street and Madison Street when entering from the north on Forest Street;

Fortune Drive and Prospect Drive at CTH “T,” when entering from the east on Fortune Drive and Prospect Drive;

Fourteenth Street and Raedel Road when entering from the north on Fourteenth Street;

Fourth Avenue and Broadway Street when entering from the east or west on Broadway Street;

Fourth Avenue and Chippewa Street when entering from the east or west on Chippewa Street;

Fourth Avenue and Hudson Street when entering from the north or south on Fourth Avenue;

Fourth Avenue at Lake Street when entering from the north or south on Fourth Avenue;

Fourth Avenue and Niagara Street when entering from the north or south on Fourth Avenue;
Frank Street and Moholt Road when entering from the south on Frank Street;
Frederic Street and Gilbert Avenue when entering from the south on Frederic Street;
Frisbie Lane and Mars Avenue, when entering from the east and west on Frisbie Lane;
Fulton Street and Oxford Avenue when entering from the east and west on Fulton Street;
Fulton Street and Second Avenue when entering from the east and west on Fulton Street;
Galloway Street and Farwell Street when entering from the east on Galloway Street;
Garden Street and Wells Road, when entering from the west on Garden Street;
Garfield Avenue and Park Avenue when entering from the east or west on Garfield Avenue;
Garfield Avenue and Wilson Street, when entering from the north and south on Wilson Street;
Gerrard Avenue and West Hamilton Avenue when entering from the south on Gerrard Avenue;
Gilbert Avenue and Wilson Street when entering from the south on Wilson Street;
Golf Road and Commerce Valley Road when entering from the north or south on Commerce Valley Road;
Golf Road and Havenwood Lane when entering from the north and south of Havenwood Lane;
Golf Road and Kappus Drive when entering from the south on Kappus Drive;
Golf Road and London Road when entering from the north and south on London Road;
Golf Road and Meadow Lane when entering from the north and south on Meadow Lane;
Golf Road and Oakwood Hills Parkway, when entering from the north on Oakwood Hills Parkway;
Golf Road and Puttor Drive when entering from the south on Puttor Drive;
Golf Road and Sumac Lane when entering from the north on Sumac Lane;
Golf Road and Woodstock Court when entering from the north on Woodstock Court;
Graham Avenue and Grand Avenue when entering from the east or west on Grand Avenue;
Graham Avenue, Jefferson Street, Wilson Street and Gilbert Avenue when entering from the north on Graham Avenue, from the east on Jefferson Street, and from the south on Wilson Street, at Gilbert Avenue;
Grant Avenue and Nimitz Street when entering from the east and west on Grant Avenue;
Green View Drive and Eddy Lane when entering from the south on Green View Drive;
Grover Road and Stein Boulevard when entering from the north on Stein Boulevard;
Haanstad Road and Moholt Road when entering from the north on Haanstad Road;
Hamilton Avenue and Patton Street when entering from the north on Patton Street;
Hamilton Avenue and Sherman Street when entering from the north on Sherman Street;
Hamilton Avenue and Trimble Street when entering from the south on Trimble Street;
Harlem Street and Pleasant Street when entering from the south on Harlem Street;
Hastings Place and Galloway Street, when entering from the north on Hastings Place;
Hazeltine Drive and Cameron Street, when entering from the north on Hazeltine Drive;
Heights Drive and Hendrickson Drive West Frontage Road when entering from the south on the Hendrickson Drive West Frontage Road;
Heights Drive and Lasker Drive when entering from the west on Lasker Drive;
Heimstead Road and Warden Street, when entering from the west on Heimstead Road;
Hemlock Lane and Abbe Hill Drive when entering from the west on Hemlock Lane;
Henry Avenue and Fairfax Street when entering from the east or west on Henry Avenue;
Hester Street and Chumas Drive, when entering from the west on Chumas Drive;
Hester Street and Hatch Street when entering from the south on Hester Street;
Hester Street and Mitscher Avenue when entering from the north on Hester Street;
Hiawatha Street and Abbe Hill Drive when entering from the west on Hiawatha Street;
Highland Avenue and Agnes Street when entering from the north or south on Agnes Street;
Highland Avenue and Chapin Street when entering from the north on Chapin Street;
Highland Avenue and Keith Street when entering from the south on Keith Street;
Highland Avenue and Lee Street when entering from the north and south on Lee Street;
Highland Avenue and Roderick Street when entering from the north and south on Roderick Street;
Hobart Street and Huyssen Street when entering from the west on Huyssen Street;
Hobart Street and Oak Street when entering from the east and west on Oak Street;
Hobart Street and William Street when entering from the north and south on Hobart Street;
Hobart Street and Wisconsin Street, when entering from the north and south on Hobart Street;
Hogarth Street and Robin Road when entering from the west on Hogarth Street;
Hudson Street and Sixth Avenue when entering from the north and south on Sixth Avenue;
Hudson Street and Seventh Avenue, when entering from the east and west on Hudson Street;
Huebsch Blvd. and Belmont Avenue, when entering from the east on Belmont Avenue;
Huebsch Blvd. and Culver Street, when entering from the north on Culver Street;
Huebsch Blvd. and Emery Street, when entering from the south on Huebsch Blvd.;
Huebsch Blvd. and Summer Street, when entering from the north on Summer Street;
Illinois Street and Menomonie Street when entering from the north on Illinois Street;
Jannet Avenue and Fairfax Street when entering from the west on Jannet Avenue;

Jill Avenue and Stein Boulevard when entering from the west on Jill Avenue;
Jupiter Avenue and North Lane when entering from the south on Jupiter Avenue;
Keith Street and Badger Avenue when entering from the west on Badger Avenue;
Keith Street and Benton Avenue when entering from the west on Benton Avenue;
Keith Street and Donald Avenue when entering from the west on Donald Avenue;
Keith Street and East Lexington Boulevard when entering from the east and west on East Lexington Boulevard;
Keith Street and Goff Avenue when entering from the east or west on Goff Avenue;
Keith Street and Hoover Avenue when entering from the west on Hoover Avenue;
Keith Street and Hopkins Avenue when entering from the west on Hopkins Avenue;
Keith Street and Laurel Avenue when entering from the east or west on Laurel Avenue;
Keith Street and Lloyd Avenue when entering from the west on Lloyd Avenue;
Keith Street and Lyndale Avenue when entering from the west on Lyndale Avenue;
Keith Street and Ohm Avenue when entering from the east or west on Ohm Avenue;
Keith Street and Rist Avenue when entering from the west on Rist Avenue;
Keith Street and Valmont Avenue when entering from the east or west on Valmont Avenue;
Kenney Avenue and Stein Boulevard when entering from the east on Kenney Avenue;
Kenney Avenue and Thomas Drive, when entering from the south on Thomas Drive;
Keystone Crossing and Commonwealth Avenue, when entering from the north and south on Commonwealth Avenue;
Lake Street and First Avenue when entering from the north and south on First Avenue;
Lake Street and Seventh Avenue when entering from the north and south on Seventh Avenue;
Lake Street and Sixth Avenue when entering from the north and south on Sixth Avenue;
La Mans Lane and Cleveland Street, when entering from the north of La Mans Lane;
Lamont Street and McElroy Street when entering from the north on Lamont Street;
Lee Street and Altoona Avenue, when entering from the north and south on Lee Street;
Lee Street and Badger Avenue, when entering from the north and south on Lee Street and the east and west on Badger Avenue;
Lee Street and Emery Street, when entering from the north and south on Lee Street;
Lee Street and Fenwick Avenue, when entering from the east on Fenwick Avenue;
Lee Street and Hogeboom Avenue, when entering from the east and west on Hogeboom Avenue;
Lee Street and Hoover Avenue, when entering from the east and west on Hoover Avenue;
Lee Street and Laurel Avenue, when entering from the east on Laurel Avenue;
Lee Street and Lyndale Avenue, when entering from the east and west on Lyndale Avenue;
Lee Street and Sherwin Avenue, when entering from the east and west on Sherwin Avenue;
Lee Street and Woodland Avenue, when entering from the south on Lee Street;
Leslie Lane and Abbe Hill Drive when entering from the east or west on Leslie Lane;
Lever Street and McElroy Street, when entering from the east on McElroy Street;
Lever Street and McElroy Street, when entering from the north on Lever Street;
Lincoln Avenue and Rust Street, when entering from the north and south on Rust Street;
Lincoln Avenue and Wilson Street, when entering from the east and west on Lincoln Avenue;
London Road and East Hamilton Avenue when entering from the east on East Hamilton Avenue;
London Road and Henry Avenue when entering from the east on Henry Avenue;
London Road and Skeels Avenue when entering from the east on Skeels Avenue;
London Road and State Highway 93 when entering from the west on London Road;
Long Street and Third Street, when entering from the west on Long Street;
MacArthur Avenue and Craig Road when entering from the east or west on MacArthur Avenue;
MacArthur Avenue and Nimitz Street when entering from the east and west on MacArthur Avenue;
MacArthur Avenue and Stein Boulevard when entering from the east and west on MacArthur Avenue and from the north and south on Stein Boulevard;
Madison Street and Germania Street when entering from the east on Madison Street;
Madison Street and McDonough Street when entering from the north or south on McDonough Street;
Madison Street and Putnam Street when entering from the north on Putnam Street or from the east on Madison Street;
Madison Street and Putnam Street when entering from the west on Madison Street;
Madison Street and Spring Street when entering from the north or south on Spring Street;
Madison Street and Whipple Street when entering from the north and south on Whipple Street;
Mall Drive and Henry Avenue when entering from the north or south on Mall Drive;
Mall Drive and Henry Avenue when entering from the west on Henry Avenue;
Mall Drive and Skeels Avenue when entering from the west on Skeels Avenue;
Maple Street and Second Street when entering from the north and south on Second Street;
Mappa Street and Randall Street, when entering from the north and south on Mappa Street;

Marquette Street and Mercury Avenue, when entering from the east and west on Marquette Street and from the north and south on Mercury Avenue, except the right turn merge lane from the south on Mercury Avenue shall be controlled by a yield sign;

Mars Avenue and North Lane when entering from the south on Mars Avenue;

Martenson Street and Mitscher Avenue when entering from then north on Martenson Street;

Martin Street and Otter Road, when entering from the west on Martin Street;

Maxon Street and Babcock Street, when entering from the east or west on Maxon Street;

Maxon Street and North Oxford Avenue when entering from the west on Maxon Street;

Maxon Street and Seventh Street, when entering from the east on Maxon Street;

May Street and East Lexington Boulevard when entering from the north and south on May Street;

Mayo Street and Mitscher Avenue when entering from the north and south on Mayo Street;

McDonough Street and Summit Street when entering from the north and south on McDonough Street;

McElroy Street and STH 93 East Frontage Road when entering from the east on McElroy Street;

McKinley Avenue and Wilson Street, when entering from the east and west on McKinley Avenue;

McKinley Road and Northwoods Lane, when entering from the west on Northwoods Lane;

McIvor Street and Mitscher Avenue when entering from the north on McIvor Street;

McKinley Avenue and Park Avenue when entering from the east on McKinley Avenue;

Meadow Lane and Rudolph Road when entering from the west on Meadow Lane;

Menomonie Street and Ferry Street when entering from the west on Menomonie Street;

Menomonie Street and Ninth Avenue when entering from the north or south on Ninth Avenue;

Mercury Avenue and North Lane when entering from the south on Mercury Avenue;

Mercury Avenue and Piedmont Road when entering from the south on Mercury Avenue;

Michigan Street and Short Street when entering from the north on Michigan Street;

Mill Run Road and Renee Drive, when entering from the west on Renee Drive and from the east on Renee Court;

Mill Run Road and Village Park Drive, when entering from the south on Village Park Drive;

Milton Road and Eddy Lane when entering from the north or south on Milton Road;

Milton Road and Green Acres Court when entering from the west on Green Acres Court;

Milton Road and Greenview Drive when entering from the west on Greenview Drive;

Mitchell Avenue and Hester Street, when entering from the west on Mitchell Avenue;

Mitchell Avenue and Nimitz Street when entering from the east and west on Mitchell Avenue;

Mitchell Avenue and Edgewood Lane, when entering from the south on Mitchell Avenue and from the north on the private driveway;

Mitscher Avenue and Nimitz Street when entering from the east and west on Mitscher Avenue;

Mitscher Avenue and Riley Street when entering from the north on Riley Street;

Mitscher Avenue and Rudolph Road when entering from the east and west on Mitscher Avenue;

Mitscher Avenue and Sharon Drive when entering from the north on Sharon Drive;

Mitscher Avenue and Trimble Street when entering from the north and south on Trimble Street;

Mondovi Road and Short Street when entering from the north on Mondovi Road;

Monroe Street and Edgewood Lane, when entering from the east and west on Edgewood Lane;

Mont Claire Street and Moholt Road when entering from the north on Mont Claire Street;

Moon Avenue and North Lane when entering from the south on Moon Avenue;

Moore Street and Galloway Street when entering from the south on Moore Street;

Morgan Avenue and Stein Boulevard when entering from the west on Morgan Avenue;

Morningside Drive and Pine Street when entering from the west on Pine Street;

Mountaray Drive and Abbe Hill Drive when entering from the west on Mountaray Drive;

Mt. Nemo Avenue and South Slope Terrace, when entering from the south on Mt. Nemo Avenue;

Necessity Street and Warden Street, when entering from the east on Necessity Street;

Neptune Avenue and North Lane when entering from the south on Neptune Lane;

Niagara Street and Sixth Avenue when entering from the north and south on Sixth Avenue;

Niagara Street and Seventh Avenue when entering from the east and west on Niagara Street;

Nimitz Street and Pamela Place when entering from the east on Pamela Place;

Nimitz Street and Polk Avenue when entering from the east and west on Polk Avenue;

Nimitz Street and Taft Avenue when entering from the east on Taft Avenue;

Nimitz Street and Tyler Avenue when entering from the east and west on Tyler Avenue;

North Lane and Saturn Avenue when entering from the south on Saturn Avenue

North Lane and Uranus Avenue when entering from the south on Uranus Avenue;

North Lane and Venus Avenue when entering from the south on Venus Avenue;

Oak Knoll Drive and Forest Heights Drive, when entering from the north or south on Forest Heights Drive;

Oak Knoll Drive and S. Oakwood Hills Parkway, when entering from the west on Oak Knoll Drive;

Oakwood Hills Parkway and Oakwood Mall Drive, when entering from the east on Oakwood Mall Drive, except the right turn merge lane from Oakwood Mall Drive shall be controlled by a yield sign;

Omaha Street and Balcom Street, when entering from the east or west on Balcom Street;
Omaha Street and Bergen Avenue, when entering from the south on Bergen Avenue;
Omaha Street and Centre Street, when entering from the north or south on Centre Street;
Omaha Street and Churchill Street, when entering from the east or west on Omaha Street;
Omaha Street and Churchill Street when entering from the north on Churchill Street;
Omaha Street and Cochrane Street, when entering from the south on Cochrane Street;
Omaha Street and Davis Avenue, when entering from the south on Davis Avenue;
Omaha Street and Deyo Avenue, when entering from the south on Deyo Avenue;
Omaha Street and Fall Street, when entering from the north or south on Fall Street;
Omaha Street and Holm Avenue, when entering from the south on Holm Avenue;
Omaha Street and McDonough Street, when entering from the north or south on McDonough Street;
Omaha Street and Putnam Street, when entering from the east on Omaha Street;
Omaha Street and Spring Street, when entering from the east or west on Omaha Street;
Omaha Street and Starr Avenue, when entering from the west on Omaha Street;
Orchard Place and Moholt Road when entering from the south on Orchard Place;
Oxford Avenue and Beach Street, when entering from the east or west on Beach Street;
Oxford Avenue and First Avenue when entering from the east on First Avenue;
Oxford Avenue and Second Avenue when entering from the south on Oxford Avenue;
Oxford Avenue and Spruce Street when entering from the west on Spruce Street;
Oxford Avenue at Lake Street when entering from the north on Oxford Avenue;
Palmer Lane and Meadow Lane, when entering from the north or south on Palmer Lane;
Park Avenue and Garfield Avenue when entering from the north or south on Park Avenue;
Park Avenue and Roosevelt Avenue when entering from the north on Park Avenue;
Patton Street and Grant Avenue, when entering from the east or west on Grant Avenue;
Patton Street and MacArthur Avenue, when entering from the east or west on MacArthur Avenue;
Patton Street and Polk Avenue, when entering from the north or south on Patton Street;
Patton Street and Truman Avenue, when entering from the west on Truman Avenue;
Patton Street and Tyler Avenue, when entering from the north or south on Patton Street;
Peebles Street and Zephyr Hill Avenue, when entering from the west on Peebles Street;
Pershing Street and Addison Avenue when entering from the north and south from Pershing Street;
Peters Drive and Jodi Drive, when entering from the east on Peters Drive;
Peterson Street and Robin Road when entering from the west on Peterson Street;
Piedmont Road and Comet Court when entering from the north on Comet Court;
Piedmont Road and Mars Avenue when entering from the north on Mars Avenue;
Piedmont Road and Mercury Avenue, when entering from the east and west on Piedmont Road;
Piedmont Road and Mercury Avenue when entering from the north or south on Mercury Avenue;
Piedmont Road and Starr Avenue when entering from the west on Piedmont Road;
Piedmont Road and Uranus Avenue when entering from the north on Uranus Avenue;
Piedmont Road and Wayland Court when entering from the south on Wayland Court;
Piedmont Road and Wellington Drive West when entering from the north or south on Wellington Drive West;
Piedmont Road and Wellington Drive East when entering from the north or south on Wellington Drive East;
Pine Street and Hastings Place when entering from the east on Pine Street;
Platt Street and Bellinger Street when entering from the south on Bellinger Street;
Platt Street and Ninth Street, when entering from the east and west on Platt Street;
Platt Street and Seventh Street when entering from the west on Platt Street;
Pleasant Street and Esmond Road when entering from the north or south on Esmond Road;
Prospect Drive and Venture Drive, when entering from the east and west on Prospect Drive;
Putnam Street and Galloway Street when entering from the north on Putnam Street;
Putnam Street and Fay Street when entering from the west on Fay Street;
Putnam Street and Madison Street when entering from the north on Putnam Street;
Putnam Street and Summit Street when entering from the east on Summit Street;
Putnam Street and Wisconsin Street when entering from the east or west on Wisconsin Street;
Quarry Street and Mt. Washington Avenue, when entering from the east on Quarry Street;
Randall Street and Oxford Avenue when entering from the west on Randall Street;
Randall Street and Whipple Street when entering from the east or west on Randall Street;
Rassbach Street and Stein Boulevard when entering from the east on Rassbach Street;
Ravencrest Avenue and Shale Ledge Road when entering from the north or south on Ravencrest Avenue;
Renee Drive and John Hart Place, when entering from the south on John Hart Place;
Richard Drive and Stein Boulevard when entering from the east and west on Richard Drive;

Ridge Road and Esmond Road, when entering from the north on Esmond Road and from the south on the private driveway from K-Mart;

Ridge Road and Pleasant Street when entering from the east on Ridge Road;

Ridge Road and Fairfax Street when entering from the east on Ridge Road;

Robert Road and Moholt Road when entering from the north on Robert Road;

Robin Road and Runway Avenue when entering from the west on Runway Avenue;

Roderick Street and Altoona Avenue, when entering from the north and south on Roderick Street;

Roderick Street and Badger Avenue, when entering from the north on Roderick Street;

Roosevelt Avenue and Wilson Street, when entering from the north and south on Wilson Street;

Rudolph Road and East Lexington Boulevard when entering from the east or west on East Lexington Boulevard;

Rudolph Road and Jensen Road when entering from the west on Jensen Road;

Rudolph Road and Meadow Lane when entering from the north on Rudolph Road;

Rudolph Road and Mitchell Avenue when entering from the east on Mitchell Avenue;

Rudolph Road and Mitscher Avenue, when entering from the north and south on Rudolph Road;

Rust Street and Gilbert Avenue when entering from the north or south on Rust Street;

Rust Street and Summit Avenue, when entering from the north or south on Rust Street;

St. Claire Street and Eddy Street, when entering from the south on St. Claire Street;

Salem Lane and Abbe Hill Drive when entering from the west on Salem Lane;

Saturn Avenue and Frisbie Lane, when entering from the north or south on Saturn Avenue;

Second Avenue and Broadway Street when entering from the east or west on Broadway Street;

Second Avenue and Chippewa Street when entering from the east or west on Chippewa Street;

Second Avenue and Hudson Street when entering from the north or south on Second Avenue;

Second Avenue and Niagara Street when entering from the north or south on Second Avenue;

Second Avenue and W. Grand Avenue, when entering from the north or south on Second Avenue, or from the east or west on W. Grand Avenue;

Selma Street and Third Street, when entering from the west on Selma Street;

Seymour Road and Western Avenue when entering from the north on Western Avenue;

Shady Grove Road and Zephyr Hill Avenue, when entering from the east on Shady Grove Road;

Sherman Street and East Hamilton Avenue when entering from the north on Sherman Street;

Sherwin Avenue and Isabel Street, when entering from the north on Isabel Street;

Sixth Avenue and Fulton Street when entering from the north or south on Sixth Avenue;

Sixth Avenue and Union Street when entering from the east and west on Union Street;

Sixteenth Street and Moholt Road when entering from the south on Sixteenth Street;

Skeels Avenue and Catur Lane, when entering from the south on Catur Lane;

Skeels Avenue and Fairfax Street when entering from the east or west on Skeels Avenue or from the north or south on Fairfax Street;

Skeels Avenue and Irene Drive, when entering from the north on Irene Drive;

Skeels Avenue and Keith Street, when entering from the north on Keith Street;

Skeels Avenue and Marilyn Drive, when entering from the north on Marilyn Drive;

Sky Park Boulevard and International Drive when entering from the north on Sky Park Boulevard;

South Fairfax Street and East Lexington Boulevard when entering from the east or west on East Lexington Boulevard;

South Frontage Road on Hendrickson Drive and Craig Road when entering from the east on the South Frontage Road;

South Lexington Boulevard and West Hamilton Avenue when entering from the north on South Lexington Boulevard;

Southtowne Drive and London Road when entering from the east on Southtowne Drive;

Southtowne Drive and Damon Street when entering from the south on Southtowne Drive;

Southtowne Drive and Southtowne Place when entering from the south on Southtowne Place;

Speros Lane and Meadow Lane, when entering from the west on Meadow Lane and from the east on Bostrom Court;

Statz Avenue and LaSalle Street, when entering from the south on Statz Avenue;

Stein Boulevard and Violet Avenue when entering from the west on Violet Avenue;

STH 93 East Frontage Road and Lorch Avenue, when entering from the north and south on STH 93 East Frontage Road;

Summer Street and Belmont Avenue, when entering from the east and west on Belmont Avenue;

Sundet Road and Cardinal Avenue, when entering from the south on Cardinal Avenue;

Sundet Road and Lark Avenue, when entering from the south on Lark Avenue;

Sundet Road and McIntyre Avenue, when entering from the south on McIntyre Avenue;

Sundet Road and Robin Road, when entering from the south on Robin Road;

Sunset Lane and Fairmont Avenue, when entering from the east or west on Sunset Lane;

Talmadge Street and Emery Street when entering from the north on Talmadge Street;

Tamarack Drive and Golf Road when entering from the north on Tamarack Drive;
Tamarack Drive and Rudolph Road when entering from the west on Tamarack Drive;
Tenth Avenue and Menomonie Street, when entering from the east on Menomonie Street;
Tenth Avenue and Menomonie Street, when entering from the south on Tenth Avenue;
Tenth Avenue and Water Street, when entering from the north on Tenth Avenue;
Terry Lane and Abbe Hill Drive entering from the east or west on Terry Lane;
The Ramp in the northwest quadrant of the interchange of U.S. Highway 53 and Birch Street when entering from the north on the Ramp;
Third Avenue and Broadway Street when entering from the north or south on Third Avenue;
Third Avenue and Chippewa Street when entering from the north or south on Third Avenue;
Third Avenue and Hudson Street when entering from the east and west on Hudson Street;
Third Avenue and Niagara Street when entering from the east or west on Niagara Street;
Third Street and Platt Street and Whipple Street when entering from the east on Platt Street, or from the west on Platt Street, or from the south on Whipple Street, except that vehicles westbound on Platt Street and making a right turn onto Third Street need not stop;
Third Street and Truax Boulevard when entering from the north on Third Street;
Third Street and Wells Road, when entering from the north on Third Street;
Thirteenth Street and Bolles Street, when entering from the north or south on Thirteenth Street;
Thirteenth Street and Marshall Street, when entering from the north or south on Thirteenth Street;
Trimble Street and East Lexington Boulevard when entering from the north and south on Trimble Street;
Trinity Street and Abbe Hill Drive when entering from the west on Trinity Street;
Truax Boulevard and Mercantile Drive, when entering from the south on Mercantile Drive;
Valley Park Court at Seventh Street, when entering from the east on Valley Park Court;
Valmont Avenue and Birney Street, when entering from the north and south on Birney Street;
Valmont Avenue and Donnellan Lane when entering from the north or south on Donnellan Lane;
Warden Street and the N. Clairemont Avenue East Frontage Road, when entering from the west on the East Frontage Road;
Washington Street and South Farwell Street when entering from north or south on Farwell Street or from the west on Washington Street;
Wedgewood Avenue and Somona Parkway, when entering from the north end south on Wedgewood Avenue;
West Frank Street and Deblene Lane, when entering from the east and west on West Frank Street;
West Frontage Road on North Hastings Way and Galloway Street when entering from the north on the West Frontage Road;
West Frontage Road on North Hastings Way and Jackson Street when entering from the west on Jackson Street;
West Frontage Road on North Hastings Way and Shady Grove Road when entering from the west on Shady Grove Road;
West Frontage Road on North Hastings Way and Eddy Lane when entering from the south on the West Frontage Road;
West Frontage Road on North Hastings Way and Marquette Street when entering from the west on Marquette Street;
West Frontage Road on North Hastings Way and Hiawatha Street when entering from the west on Hiawatha Street;
West Frontage Road on North Hastings Way and LaSalle Street when entering from the north or south on the West Frontage Road;
West Frontage Road on North Hastings Way and Harrison Street when entering from the west on Harrison Street;
West Grand Avenue and First Avenue when entering from the west on West Grand Avenue;
West Grand Avenue and Lake Street when entering from the north on West Grand Avenue;
West Hamilton Avenue and Craig Road when entering from the north or south on Craig Road;
West Hamilton Avenue and Eldorado Boulevard when entering from the north on Eldorado Boulevard;
West Hamilton Avenue and Ellis Street when entering from the north on Ellis Street;
West Hamilton Avenue and Gerrard Avenue when entering from the south on Gerrard Avenue;
West Hamilton Avenue and Stein Boulevard when entering from the north or south on Stein Boulevard or from the east or west on West Hamilton Avenue;
West Vine Street and Hazeltine Drive, when entering from the west on Hazeltine Drive;
West Vine Street and Rosewood Lane, when entering from the east and west on Rosewood Lane;
Westhaven Court and Westover Road when entering from the north on Westhaven Court;
Westover Lane and Westover Road when entering from the north on Westover Lane;
Westover Road and Stein Boulevard when entering from the east on Westover Road;
Westover Road and Whispering Pines Lane when entering from the north on Whispering Pines Lane;

White Avenue and Davey Street, when entering from the west on Davey Street;
White Avenue and McMillen Street, when entering from the east on McMillen Street;
White Avenue and Runway Avenue, when entering from the east or west on Runway Avenue;
Winsor Drive and Abbe Hill Drive when entering from the west on Winsor Drive;
Wisconsin Street and Farwell Street when entering from the east on Wisconsin Street;
Wisconsin Street and Riverfront Terrace, when entering from the east on Wisconsin Street.
(Ord. 7451 §1, 2021; Ord. 7036, 2012; Ord. 7035, 2012; Ord. 7014, 2012; Ord. 6975, 2011; Ord. 6811, 2008; Ord. 6797, 2007; Ord. 6796, 2007; Ord. 6792, 2007; Ord. 6791 §1, 2007; Ord. 6764, 2007; Ord. 6737, 2006 Ord. 6698, 2006; Ord. 6662, 2006; Ord. 6661, 2006; Ord. 6659, 2006; Ord. 6640, 2005; Ord. 6639, 2005; Ord. 6631, 2005; Ord. 6615, 2005; Ord. 6614, 2005; Ord. 6598, 2005; Ord. 6536, 2004; Ord. 6534, 2004; Ord. 6533, 2004; Ord. 6532, 2004; Ord. 6528, 2004; Ord. 6513, 2004; Ord. 6507, 2004; Ord. 6479, 2004; Ord. 6457, 2003; Ord. 6450, 2003; Ord. 6373, 2003; Ord. 6354, 2002; Ord. 6316, 2002; Ord. 6315, 2002; Ord. 6308, 2002; Ord. 6298, 2002; Ord. 6297, 2002; Ord. 6291, 2002; Ord. 6278, 2002; Ord. 6277, 2002; Ord. 6260, 2002; Ord. 6249, 2001; Ord. 6227, 2001; Ord. 6198, 2001; Ord. 6197, 2001; Ord. 6196, 2001; Ord. 6195, 2001; Ord. 6194, 2001; Ord. 6178, 2001; Ord. 6147, 2001; Ord. 6143, 2001; Ord. 6142, 2001; Ord. 6138, 2001; Ord. 6120, 2000; Ord. 6119, 2000; Ord. 6085, 2000; Ord. 6084, 2000; Ord. 6074, 2000; Ord. 6065, 2000; Ord. 6062, 2000; Ord. 6061, 2000; Ord. 6045, 2000; Ord. 6022, 2000; Ord. 6021, 2000; Ord. 5967, 1999; Ord. 5916, 1999; Ord. 5892, 1998; Ord. 5884, 1998; Ord. 5873, 1998; Ord. 5768, 1997; Ord. 5761, 1997; Ord. 5749, 1997; Ord. 5742, 1997; Ord. 5693, 1997; Ord. 5630, 1996; Ord. 5612, 1996; Ord. 5575, 1996; Ord. 5554 §1, 1995; Ord. 5551, 1995; Ord. 5524 §2, 1995; Ord. 5450 §2, 1994; Ord. 5428 §1, 1994; Ord. 5358 §2, 1993; Ord. 5336 §1, 1993; Ord. 5269 §3, 1992; Ord. 5262 §1, 1992; Ord. 5195 §1, 1991; Ord. 5145, 1991; Ord. 5110 §4, 1990; Ord. 5074 §1, 1990; Ord. 5073 §2, 1990; Ord. 5060 §3, 1990; Ord. 5002 §1, 1989; Ord. 4968 §1, 1989; Ord. 4924 §2, 1989; Ord. 4901 §1, 1989; Ord. 4872 §2, 1988; Ord. 4850 §2, 1988; Ord. 4795 §1, 1988; Ord. 4735 §1, 1987; Ord. 4723 §2, 1987; Ord. 4719, 1987; Ord. 4699 §1, 1987; Ord. 4691 §1, 1986; Ord. 4671 §2, 1986; Ord. 4641 §§1, 2, 1986; Ord. 4611 §1, 1986; Ord. 4593 §1, 1985; Ord. 4582 §3, 1985; Ord. 4566 §3, 1985; Ord. 4528 §3, 1985; Ord. 4526 §2, 1985; Ord. 4489 §2, 1984; Ord. 4310 §2, 1982; Ord. 4296 §1, §2, 1982; Ord. 4239, 1981; Ord. 4214 §2, 1981; Ord. 4195 §2, 1981; Ord. 4144, 1981; Ord. 4138, 1980; Ord. 4129, 1980; Ord. 4109 §1, 1980; Ord. 4095 §2, 1980; Ord. 4090, 1980; Ord. 4073 §2, 1980; Ord. 4050 §3, 1980; Ord. 4027, 1979; Ord. 4024 §2, 1979; Ord. 3932 §§1, 2, 1978; Ord. 3921, 1978; Ord. 3901 §1, 1978; Ord. 3883, 1978; Ord. 3851 §1, 1978; Ord. 3829 §1, 1977; Ord. 3817 §1, 1977; Ord. 3801 §2, 1977; Ord. 3795 §§2, 3, 1977; Ord. 3790, 1977; Ord. 3779 §2, 1977; Ord. 3726, 1977; Ord. 3708 (part), 1977; Ord. 3707, 1977; Ord. 3690, 1976; Ord. 3688 (part), 1976; Ord. 3666 §2, 1976; Ord. 3598 §3, 1976; Ord. 3570 (part), 1975; Ord. 3565 (part), 1975; Ord. 3557 §§1 and 2, 1975; Ord. 3535 (part), 1975; Ord. 3504 §2, 1975; Ord. 3503 §2, 1975; Ord. 3502 (part), 1975; Ord. 3496 §2, 1975; Ord. 3494, 1974; Ord. 3465, 1974; Ord. 3463 §2, 1974; Ord. 3446, 1974; Ord. 3431, 1974; Ord. 3427, 1974; Ord. 3411, 1973; Ord. 3401 §I, 1973; Ord. 3370 §§II, III, 1973; Ord. 3367 §I, 1973; Ord. 3348 §II, 1973; Ord. 3347 §II, 1973; Ord. 3316 §II, 1972; Ord. 3302 §II, 1972; Ord. 3291 §I, 1972; Ord. 3231 §I, 1971; Ord. 3110 §I, 1969; Ord. 3097 §I, 1969; prior code §17.03(2)).

TABLE IV

STOPS AT RAILROAD CROSSINGS

Stops required at railroad crossings. Pursuant to authority granted by Wisconsin Statutes, Section 349.085, the installation of official stop signs of the size and type prescribed in Wisconsin Statutes, Section 349.08 is authorized and directed at the following railroad crossings, and when such stop signs are so installed, all operators of vehicles shall comply with the requirements of Wisconsin Statutes, Section 346.46(3);

The crossing of the railroad tracks of the Chicago and Northwestern Railroad and the Soo Line Railroad and Delbert Road;
The crossing of the railroad tracks of the Chicago and Northwestern Railroad and the Soo Line Railroad and Redwood Drive;
The crossing of the railroad tracks of the Chicago and Northwestern Railroad and Centre Street. (Ord. 4566 §4, 1985; Ord. 3222 §I, 1971; Prior code §17.03(c)).

TABLE V

YIELD INTERSECTIONS

Yield Intersections. The operator of a vehicle, when approaching the following intersection at which has been installed a yield sign, shall yield the right of way to other vehicles which have entered the intersection from an intersecting highway or which are approaching so closely on the intersecting highway as to constitute a hazard of collision and, if necessary, shall reduce speed or stop in order to so yield:

Chapin Street and Hogeboom Avenue when entering from the east and west on Hogeboom Avenue;
Grant Avenue and May Street when entering from the east and west on Grant Avenue;
MacArthur Avenue and May Street when entering from the east and west on MacArthur Avenue;
May Street and Polk Avenue when entering from the east and west on Polk Avenue;
May Street and Tyler Avenue when entering from the east and west on Tyler Avenue.
(Ord. 6299, 2002; Ord. 5336 §2, 1993; Ord. 5002 §2, 1989; Ord. 4528 §2, 1985).

Yield Intersections - Roundabouts. The operator of a vehicle, when approaching a roundabout intersection at which YIELD signs have been installed, shall yield the right of way to other vehicles already in the roundabout by reducing speed or stopping in order to so yield:

Golf Road and Rudolph Road, when entering from the east and west on Golf Road, and from the north and south on Rudolph Road;
Hamilton Avenue (east and west) and State Street, when entering from the east and west on Hamilton Avenue and from the north and south on State Street;
Hendrickson Drive and Heights Drive, when entering from the south on Hendrickson Drive, from the north on University Drive, and from the east and west on Heights Drive;
MacArthur Avenue (east and west) and State Street, when entering from the east and west on MacArthur Avenue and from the north and south on State Street;
Platt Street and North Oxford Avenue when entering from the north and south on North Oxford Avenue and from the west on Platt Street;
Rosewood Lane and Sherwood Boulevard, when entering from the east and west on Rosewood Lane, and from the north and south on Sherwood Boulevard; and
State Street and Lexington Boulevard (east and west), when entering from the east on East Lexington Boulevard, from the west on West Lexington Boulevard, and from the north and south on State Street.
(Ord. 7451 §2, 2021; Ord. 6791 §2, 2007; Ord. 6616, 2005).

TABLE VI

ONE-WAY STREETS AND ALLEYS

One-way Streets and Alleys. Pursuant to Section 349.10, Wisconsin Statutes, the following streets and alleys and parts thereof are declared to be one-way streets and alleys and no person shall operate any vehicle thereon except in the indicated direction, except for persons, teams, motor vehicles or road machinery when actually engaged in maintenance or construction work upon any such street or alley:

Galloway Street, westbound only from Barstow Street to Hobart Street; and
State Street, southbound only from Marston Avenue to Washington Street;
(Ord. 7108, 2014; Ord. 6121, 2000; Ord. 5074 §2, 1990; Ord. 4528 §1, 1985; Ord. 4039, 1979; Ord. 3851 §2, 1978; Ord. 3815, 1977; Ord. 3795 §4, 1977; Ord. 3313 §VI, 1972; Prior code §17.04).

TABLE VII

LEFT TURNS PROHIBITED

Left turns prohibited at certain intersections. No operator of any vehicle shall make a left turn at any of the following intersections when signs are erected and maintained indicating such prohibition:

At Lee Street and Harding Avenue, when traveling south on Lee Street;
At Summit Avenue when traveling south on State Street;
At Dewey Street when traveling west on Madison Street;
At Railroad Street when traveling south on Farwell Street;
At Gibson Street when traveling south on Farwell Street.
(Ord. 6300, 2002; Ord. 4528 §1, 1985; Ord. 4298, 1982; Ord. 3623, 1976; Ord. 3469, 1974; Ord. 3407 §I, 1972; Ord. 3313 §VII(part), 1972; Ord. 3292 §I, 1972; Prior code §17.05).

TABLE VIII

PARKING PROHIBITED

Streets designated--Authority. No person shall park any vehicle at any time on any of the following streets, except physicians on emergency calls:

Ann Street, both sides from First Avenue to Second Avenue;
Ann Street, the south side of the 100 block;
Arbor Court, both sides from Mondovi Road to the west end of Arbor Court;
Badger Avenue, north side, from Fairfax Street to Hastings Way;
Barstow Street, east side from Main Street to 150 feet north of Main Street;
Bartlett Court, the north side, from State Street to a point 50 feet east of State Street;
Bartlett Court, the south side of the 300 block;
Beach Street, the south side from Whipple Street to Bellinger Street;
Bellevue Avenue, south side, from 75 feet east of McDonough Street to 150 feet east of McDonough Street;
Bellinger Street, both sides, from Spruce Street to a point 100 feet north of Madison Street;
Bergen Avenue, the west side from Birch Street to 100 feet south of Birch Street;
Birch Street, both sides from Germania Street to Bergen Avenue;
Birch Street, the south side from the east line of Bergen Avenue to 57 feet east;
Birch Street, the north side from the east line of Bergen Avenue to 170 feet east;
Bolles Street, north side, from Third Street to Second Avenue;
Bolles Street, both sides, from Third Street to 50 feet west of Third Street;
Brackett Avenue, the north side from Harding Avenue to Hastings Way;
Brackett Avenue, the south side from Rudolph Road to Hastings Way;
Cameron Street, both sides from Bellinger Street west to the railroad overpass;
Cameron Trail, north side, between Eleventh Street and Eighth Street;
Campus Road, south side, from 700 feet east of Losan Avenue to Preston Road;
Carson Park Drive, both sides, from W. Grand Avenue (the east end of the causeway) to 50 feet southwesterly of the main parking lot easterly entrance;
Charles Street, the west side, from Platt Street to Maxon Street;
Chestnut Street, the north side, from Fifth Avenue to Bellinger Street;
Chestnut Street, the north side from Whipple Street to Sixth Avenue;
Chestnut Street, the south side from Bellinger Street to Sixth Avenue;
Chestnut Street, the south side, from Fifth Avenue to a point 50 feet west of Fifth Avenue;
Chestnut Street, the south side, from Whipple Street to a point 50 feet east of Whipple Street;
Clairemont Avenue East Frontage Road, the west side, from Moholt Drive to Warden Street;
Clairemont Avenue East Frontage Road, the east side, from Moholt Drive to Frank Street;
Clairemont Avenue North Frontage Road, the north side, from Stein Boulevard to a point 1,335 feet west of Stein Boulevard;
Clairemont Avenue North Frontage Road, the south side, from Craig Road to 1,608 feet northwest of Craig Road;
Clairemont Avenue North Frontage Road, the south side, from 670 feet east of Trimble Street to Rudolph Road;
Clairemont Avenue North Frontage Road, the north side, from Craig Road to 500 feet west of Craig Road;
Clairemont Avenue north service road, the south side, from Otter Road to the west end;
Clairemont Avenue, South Frontage Road, the north side from the west end of such frontage road to Stein Boulevard;
Clairemont Avenue West Frontage Road, both sides, from Cameron Street to Vine Street;
Cleveland Street, south side, from 200 feet east of Fisher Street to Pitt Street;
Coolidge Court, west side, from Garfield Avenue to the south end;
Craig Road, both sides, from a point 300 feet south of Hamilton Avenue to International Drive;
Craig Road, both sides, from Hamilton Avenue to a point 300 feet south of Hamilton Avenue;
Craig Road, both sides, from MacArthur Avenue to Hendrickson Drive (STH 37);
Craig Road, both sides, from Hendrickson Drive (STH 37) to Clairemont Avenue (USH 12);
Craig Road, the east side, from Lasker Drive to 115 feet south of Lasker Drive;
Craig Road, the west side, from 170 feet north of Lasker Drive to 115 feet south of Lasker Drive;
Dewey Street (South), both sides of the 200 block;
Dewey Street, the east side, from Galloway Street to a point 105 feet south of Galloway Street;

Dewey Street, the west side, from Galloway Street to a point 235 feet south of Galloway Street;
Dewey Street, the west side, from Main Street to 45 feet north of Main Street;
Dewey Street, the west side from Main Street to a point 75 feet south of Main Street;
Donnellan Lane, the west side, from Fenwick Avenue to Valmont Avenue;
Doty Street, the east side of the 200 block;
Doty Street, east side, Newton Street to 75 feet south of Newton Street
East Clairemont Avenue South Frontage Road, the north side, from Trimble Street to Fairfax Street;
East Clairemont Avenue South Frontage Road, the south side, from Keith Street to a point 100 feet east of Keith Street;
East Grand Avenue, south side, from Winter Street to a point 100 feet east of said intersection with Winter Street;
East Grand Avenue, the south side, from Talmadge Street to Winter Street;
East Grand Avenue, the south side of the 600 and 700 blocks;
East Lexington Boulevard, south side, from Carney Street to Nimitz Street and from May Street to a point 150 feet west of May Street;
East Street, the north side, from a point 250 feet west of Jefferson Street to Harding Avenue;
Eddy Lane, north side, from Hastings Way to Wedgewood Drive;
Eddy Lane, south side, from Hastings Way to 170 feet east of Northland Drive;
Ellis Street, the east side from Kelly Place to Polk Avenue;
Elm Street, the north side from Hobart Street to Barstow Street;
Emery Street, the south side from Huebsch Boulevard to Chauncey Street;
Emery Street, both sides, from South Dewey Street to a point 135 feet west of South Dewey Street;
Enterprise Street, east side, from Sherwin Avenue to the alley south of Sherwin Avenue;
Fairfax Street, east side, from 50 feet north of Sessions Street to 50 feet south of Sessions Street;
Fairfax Street, the east side, from a point 450 feet north of Meadow Lane to a point 550 feet north of Meadow Lane (school crosswalk);
Fairfax Street, the east side, from Clairemont Avenue to a point 200 feet south of Clairemont Avenue;
Fairfax Street, the west side, from Clairemont Avenue to Lexington Boulevard;
Fairfax Street, the west side, from Henry Avenue to Hamilton Avenue;
Fairfax Street, west side, from Highland Avenue to Hastings Way;
Fairfax Street, both sides, from 100 feet south of Golf Road to 150 feet north of Golf Road;
Farwell Street, the west side from Madison Street to 100 feet north of Madison Street;
Farwell Street, the west side, from 30 feet south of Summit Avenue to Washington Street;
Farwell Street, the east side, from Summit Avenue to 70 feet south of Summit Avenue;
Farwell Street, both sides, from 30 feet north of Lincoln Avenue to 30 feet south of Lincoln Avenue;
Farwell Street, the west side, from Garfield Avenue to 30 feet north of Garfield Avenue;
Farwell Street, the east side from Garfield Avenue to 100 feet north;
Farwell Street, both sides from Washington Street to Madison Street;
Farwell Street, east side, from Washington Street to 110 feet south of Washington Street;
Fenwick Avenue, both sides, from Hastings Way to Donnellan Lane;
Ferry Street, both sides, from Short Street to Menomonie Street;
Ferry Street, the west side, from Crescent Avenue to 200 feet north;
Fifth Avenue, both sides, from Congress Street to 75 feet south of Congress Street;
Fifth Avenue, both sides, from Congress Street to Spruce Street;
Fifth Avenue, both sides, from Hudson Street to West Grand Avenue;
Fifth Avenue, the west side, from Menomonie Street to 45 feet north of Menomonie Street;
Fifth Avenue, both sides, from 75 feet north of Union Street to 75 feet south of Union Street;
Fifth Avenue, both sides, from Water Street to the alley north of Water Street;
Fifth Avenue, both sides, from 80 feet north of West Grand Avenue to Grand Avenue;
Fillmore Avenue, the south side, from 200 feet east of May Street to 340 feet east of May Street;
Fillmore Avenue, the south side, from 275 feet west of Eisenhower Street to 150 feet west of Eisenhower Street;
First Avenue, east side, from 150 feet north of Fulton Street to 225 feet north of Fulton Street;
First Avenue, the east side, from the north right-of-way line of Grand Avenue to the south right-of-way line of Grand Avenue;
First Avenue, west side, between Lake Street and Water Street;
First Avenue, the east side, from Water Street to a point 225 feet north of the north curbline of Ann Street extended;
First Street, both sides, from 50 feet north of Anderson Street to 300 feet south of Anderson Street;
Forest Street, the west side, from the Chicago/Northwestern spur viaduct to the Chicago/Northwestern main line viaduct;
Forest Street, the east side, from the Chicago/Northwestern spur viaduct to 250 feet north;

Forest Street, the east side, from 910 feet north of the Chicago/Northwestern spur viaduct to 1,000 feet north of the Chicago/Northwestern spur viaduct;

Forest Street, the east side, from 1,250 feet north of the Chicago/Northwestern spur viaduct to the Chicago/Northwestern main line viaduct;

Forest Street, both sides, from Madison Street to a point 150 feet north of Madison Street;

Forest Street, the east side, from 150 feet north of Sara Street north to the railroad underpass;

Forest Street, the west side, from 210 feet south of Sara Street north to the railroad underpass;

Fountain Street, both sides, from Second Street to Third Street;

Fountain Street, the south side from Third Street to Fourth Street;

Fountain Street, the south side, from Third Street to 60 feet east of Third Street;

Fourth Avenue, the east side, a nine foot area (one parking space), approximately 92 feet south of Water Street (at the side entrance to 341 Water Street);

Frontage Road on the west side of Highway 93, both sides, from Lorch Avenue to a point 540 feet south;

Frontage Road on north side of Clairemont Avenue, both sides, between University Drive and Hendrickson Road;

Frontage Road on the north side of Clairemont Avenue, the south side between Trimble Street and May Street;

Fulton Street, south side, from 50 feet west of Third Avenue to 50 feet east of Third Avenue;

Fulton Street, both sides, from Whipple Street to a point 50 feet east;

Fulton Street, north side, from a point 50 feet east of Whipple Street to Fifth Avenue;

Fulton Street, south side, from Fifth Avenue to a point 80 feet west of Fifth Avenue;

Galloway Street, the north side of the 600 and 700 blocks;

Galloway Street, the north side, from Putnam Street to the railroad tracks;

Galloway Street, the south side, from the main Chicago/Northwestern Transportation Company tracks to 450 feet east;

Galloway Street, the south side from North Dewey Street to 170 feet east of North Dewey Street;

Galloway Street, the south side from 350 feet east of North Dewey Street to 2230 feet east of North Dewey Street;

Galloway Street, the south side from 70 feet west of North Dewey Street to North Dewey Street;

Garfield Avenue, both sides from Park Avenue to the west end;

Garfield Avenue, the south side, from Park Avenue to 80 feet east of Park Avenue;

Garfield Avenue, the south side, from State Street to 110 feet west of State Street;

Garfield Avenue, the south side, from 30 feet west of Wilson Street to 30 feet east of Wilson Street;

Garfield Avenue, the south side, from State Street to 75 feet east of State Street;

Garfield Avenue, the south side, from 30 feet west of Roosevelt Avenue to Roosevelt Avenue;

Garfield Avenue, the north side, from Farwell Street to 30 feet east of Farwell Street;

George Street, north side, from Forest Street to the west end;

George Street, the south side from Forest Street to a point 150 feet west of Forest Street;

Germania Street, both sides from Birch Street to Madison Street;

Gibson Street, both sides, from Dewey Street to the east end;

Gibson Street, south side from Farwell Street to 130 feet west of Farwell Street;

Gibson Street, the north side of the 500 block;

Golf Road, both sides, from 500 feet east of Fairfax Street to 500 feet west of Fairfax Street;

Graham Avenue, both sides from Lake Street to 80 feet north of Lake Street;

Graham Avenue, the east side from Main Street to 50 feet north of Main Street;

Graham Avenue, the west side from Washington Street to a point 75 feet south of Washington Street;

Grand Avenue W., the north side, from Fifth Avenue to 75 feet west of Fifth Avenue;

Grand Avenue W., the north side, from 30 feet east of Fourth Avenue to 35 feet west of Fourth Avenue;

Grand Avenue, W., the north side from Sixth Avenue to Lake Street;

Grand Avenue, W., the north side from 124 feet west of Oxford Avenue to 196 feet west of Oxford Avenue;

Grand Avenue, the north side, between Graham Avenue and the Chippewa River;

Grand Avenue, the north side from 50 feet west of Farwell Street to 75 feet west of Farwell Street;

Gray Street, the north side, from Doty Street to 70 feet west of Doty Street;

Gray Street, the south side, from Doty Street to 85 feet east of Doty Street;

Gray Street, both sides, from Graham Avenue to the Chippewa River;

Hamilton Avenue, both sides, from 260 feet east of State Street to 250 feet west of State Street;*

Harding Avenue, the north side from Brackett Avenue to Washington Street;

Harding Avenue, the south side from Rudolph Road to Washington Street;

Hastings Way East Frontage Road, east side, from Seymour Road to Peebles Street

Hastings Way East Frontage Road, both sides, from Birch Street to 300 feet north of Somona Parkway;

Hastings Way East Frontage Road, both sides, from Seymour Road to Shale Ledge Road;

Hastings Way East Frontage Road, both sides, from 600 feet south of Pinehurst Road to Melby Street;

Hastings Way East Frontage Road, the west side, from Shady Grove Road to LaSalle Street;

Hastings Way East Frontage Road, the west side, from 1,137 feet south of Hemlock Lane to Eddy Lane;

Hastings Way West Frontage Road, the east side, from Tobin Street to LaSalle Street;

Hastings Way West Frontage Road, the west side, from Tobin Street to Harrison Street;

Heights Drive, both sides, from Hendrickson Drive to Lasker Drive;

Hendrickson Drive, East Frontage Road, the west side, from the north end of such frontage road to Craig Road;

Hendrickson Drive, West Frontage Road, east side, from West Clairemont Avenue, North Frontage Road to Heights Drive;

Hendrickson Drive, West Frontage Road, the west side from Clairemont Avenue, North Frontage Road, to Heights Drive;

Hendrickson Drive, both sides, from Clairemont Avenue to University Drive;

Henry Avenue, both sides from Mall Drive to London Road;

Highland Avenue, both sides from Hastings Way to Keith Street;

Highland Avenue, north side, from Keith Street to Chapin Street;

Highway 93 East Frontage Road, both sides, from Brian Street to McElroy Street;

Huyssen Street, the north side, from Hobart Street to Forest Street;

International Drive, north side, from Craig Road to 230 feet west of Craig Road;

International Drive, south side, from Craig Road to Continental Drive;

James Street, south side, from Eighth Street to Eleventh Street;

Jefferson Street, south side, from Farwell Street to Dewey Street;

Jill Avenue, both sides, from 100 feet west of Stein Blvd to Stein Blvd

Jones Street, both sides from Farwell Street to Chippewa River;

Keith Street, both sides, from Clairemont Avenue to Lloyd Avenue;

Keith Street, east side, from 50 feet south of Benton Avenue to 30 feet north of Benton Avenue;

Keith Street, east side, from 50 feet south of Rist Avenue to 30 feet north of Rist Avenue;

Keith Street, east side, from Brackett Avenue to Rist Avenue;

Keith Street, both sides, from Brackett Avenue to Ohm Avenue;

Keith Street, west side, from Brackett Avenue to Goff Avenue;

Keith Street, the west side from Lloyd Avenue to 100 feet north of Lloyd Avenue;

Keith Street, both sides, from 130 feet north of Woodland Avenue to Main Street, including the entire cul-de-sac;

Kenney Avenue, the north side, from Stein Boulevard to 25 feet east of Thomas Drive;

Kenney Avenue, the south side, from 215 feet east of Stein Boulevard to 265 feet east of Stein Boulevard;

Kenney Avenue, the south side, from 50 feet west of Thomas Drive to 30 feet east of Thomas Drive;

Kirk Street, both sides, from S. Hastings Way to Esmond Road;

Lake Street, both sides, from Farwell Street to 150 feet east of Farwell Street;

Lake Street, both sides, from Fifth Avenue to 75 feet west of Fifth Avenue;

Lake Street, north side, from Second Avenue to Oxford Avenue;

Lake Street, south side, from First Avenue to 150 feet west of First Avenue;

Lake Street, both sides, from Fifth Avenue to 150 feet east of Fifth Avenue;

Lake Street, north side, from Fifth Avenue to 60 feet west of Fifth Avenue;

Lake Street, north side, between First Avenue and Second Avenue;

Lake Street, north side, from Oxford Avenue to Second Avenue;

Lake Street, south side, from Second Avenue to 50 feet east of Second Avenue;

Lake Street, south side, from Seventh Avenue to Grand Avenue;

Lake Street, south side, from Fifth Avenue to 120 feet west of Fifth Avenue;

Lake Street, south side, from Second Avenue to 100 feet west of Second Avenue;

Lake Street, the north side from Oxford Avenue to Third Avenue;

LaSalle Street, both sides, from McKinley Road to 90 feet east;

LaSalle Street, the south side, from Abbe Hill Drive to Hillside Drive

Lasker Drive, both sides, from Heights Drive to 100 feet west;

Lexington Boulevard, the south side from Patton Street to 100 feet east of Patton Street;

Lexington Boulevard, north side from Patton Street to 100 feet east;

Lexington Boulevard, the south side from Patton Street to Nimitz Street;

Lexington Boulevard, north side from Trimble Street to 275 feet east of Trimble Street;
Lexington Boulevard, both sides, from State Street to Patton Street;
Lincoln Avenue, both sides, from 30 feet west of Wilson Street to 30 feet east of Wilson Street;
Lincoln Avenue, both sides, from 30 feet west of Farwell Street to 30 feet east of Farwell Street;
Lincoln Avenue, both sides, from State Street to 75 feet east of State Street;
London Road, both sides, from 75 feet north of Damon Street to 75 feet south of Damon Street;
London Road, the east side from East Clairemont Avenue to Skeels Avenue;
Lorch Avenue, both sides, from Highway 93 to Fairview Drive;
MacArthur Avenue, both sides, 100 feet east and west of Stein Boulevard;
MacArthur Avenue, both sides, from Ruth Street to Craig Road;
MacArthur Avenue, the north side, from Ellis Street (the north leg), to 50 feet east of Ellis Street;
MacArthur Avenue, the south side, from Ellis Street (the south leg), to 100 feet west of Ellis Street;
MacArthur Avenue, the north side, from Thomas Drive to 50 feet east of Thomas Drive;
MacArthur Avenue, the south side, from 45 feet east of the east curb line of Thomas Drive to 80 feet west of the east curb line of Thomas Drive;
Madison Street, the north side, from Germania Street to 40 feet west of Oxford Avenue;*
Madison Street, the north side from Putnam Street to 50 feet west;
Madison Street, south side, from Putnam Street to 150 feet east of Putnam Street;
Madison Street, both sides, from Germania Street to Cameron Street;
Main Street, the north side, from Dodge Street to 115 feet east of Barstow Street;
Main Street, the north side from Talmadge Street to McGraw Street;
Main Street, the north side, from 830 feet west of Margaret Street to 960 feet west of Margaret Street;
Main Street, the north side of the 700 block, except in the curb cut-back in the east 69 feet of the north side of said block;
Main Street, the north side of the 1100 block;
Main Street, the south side, from Dodge Street to 130 feet west of Dodge Street;
Main Street, the south side, from Margaret Street to 90 feet west of Margaret Street;
Main Street, the south side, from McGraw Street to 150 feet west of McGraw Street;
Main Street, both sides, from Chapin Street to Hastings Way;
Main Street, both sides, from Summer Street to 430 feet east (east line of 1303 Main Street);
Main Street, the north side, from 430 feet east of Summer Street to 625 feet east of Summer Street;
Main Street, south side, from a point 50 feet east to a point 100 feet west of Doty Street;
Main Street, south, from Doty Street to 75 feet east of Doty Street;
Mall Drive, both sides, from 300 feet north of Henry Avenue to Hamilton Avenue;
Mall Drive, in the cul-de-sac at the north end;
Mappa Street, both sides of the 500 block;
Mappa Street, the east side, from Chestnut Street to 100 feet north of the realigned alley (Block 2, Babcock & Bellinger Addition) located northeast of the realigned intersection with Bellinger Street;
Mappa Street, the east side, from Randall Street to 110 feet south;
Mappa Street, the west side, from Chestnut Street to Spruce Street;
Mappa Street, the west side, from the realigned intersection with Bellinger Street to the southeast a distance of 100 feet;
Margaret Street, west side from Hogeboom Avenue to Main Street;
Margaret Street, the east side from 70 feet north of Hogeboom Avenue to Main Street;
Margaret Street, the east side from Highland Avenue to 60 feet south;
Margaret Street, the east side from Valmont Avenue to Harding Avenue;
Margaret Street, the west side from Valmont Avenue to Harding Avenue;
Market Street, the south side, from Seventh Avenue to Ninth Avenue;
Marquette Street, north side, from 265 feet west of Colonial Drive to a point 375 feet east of Colonial Drive;
Marquette Street, the north side, from Mercury Avenue to 200 feet east of Mercury Avenue;
Marquette Street, the south side, from Mercury Avenue to Starr Avenue;
Marshall Street, the north side, from Eleventh Street to Thirteenth Street;
May Street, the east side, from 30 feet north of Taft Avenue to 90 feet south of Taft Avenue;
Maxon Street, the south side from Oxford Avenue to the alley immediately west of Oxford Avenue;
McKinley Avenue, the north side, from Park Avenue to Roosevelt Avenue;
McKinley Avenue, the south side, from Park Avenue to 100 feet east of Park Avenue;
McKinley Avenue, the south side from 80 feet west of State Street to 100 feet east of State Street;
McKinley Avenue, the south side, from 445 feet east of Wilson Street to Roosevelt Avenue;
McKinley Avenue, the south side, from 30 feet west of Wilson Street to 30 feet east of Wilson Street;
McKinley Road, both sides, from LaSalle Street to 70 feet south;
Melby Street, both sides, from Starr Avenue to Cardinal Avenue;
Menomonie Street, both sides, from Clairemont Avenue to Tenth Avenue;

Menomonie Street, both sides, from Ferry Street to Mt. Washington Avenue;
Mercantile Drive, the east side, from Kohlhepp Road to 130 feet south of West Frank Street;
Mercury Avenue, the west side, from Marquette Street to 130 feet north of Marquette Street;
Mercury Avenue, the west wide, from Piedmont Road to 85 feet south of Piedmont Road;
Minnesota Street, both sides, from Menomonie Street to Avenue A;
Mondovi Road, the north side, from 885 ft north east of Short Street intersection to 100 feet east of Arbor Court;
Morningside Drive, the north side from Pine Street to 150 feet east;
Newton Street, north side, from 200 feet west of Doty Street to 85 feet west of Dodge Street
Noble Drive, north side, from McKinley Road to 220 feet west;
Noble Drive, south side, from McKinley Road to 220 feet west.
Oakridge Drive, the north side, from 400 feet east of Craig Road to 615 feet east of Craig Road;
Oakwood Place, north side, from State Street to Park Avenue;
Ohm Avenue, the north side, from Harding Avenue to 360 feet east of Harding Avenue;
Ohm Avenue, the south side, from 165 feet east of Harding Avenue to 380 feet east of Harding Avenue;
Old Town Hall Road, both sides, from Highway 93 access to 750 feet south;
Oxford Avenue (North), the west side of the 300 block;
Oxford Avenue, west side, from 45 feet north of Beach Street to Second Avenue;
Oxford Avenue, east side, from 50 feet north of Beach Street to Beach Street;
Oxford Avenue, the east side, from Central Street to 120 feet north of Central Street;
Oxford Avenue, east side, from First Avenue to 200 feet south;
Oxford Avenue, both sides, from 50 feet north of Fulton Street to 50 feet south of Fulton Street;
Oxford Avenue, the west side, from Lake Street to W. Grand Avenue;
Oxford Avenue, the east side, from 225 ft. north of Lake Street to W. Grand Avenue;
Oxford Avenue (North), both sides from W. Madison Street to Platt Street;
Oxford Avenue, west side, from Randall Street to 60 feet south of Randall Street;
Oxford Avenue, the east side, from Randall Street to a point 170 feet south;
Oxford Avenue, the west side, from Randall Street to a point 240 feet south;
Oxford Avenue, west side, from 70 feet north of Spruce Street to 45 feet south of Spruce Street;
Oxford Avenue, east side, from 100 feet south of Spruce Street to 180 feet south of Spruce Street;
Park Avenue, both sides, from Garfield Avenue to Summit Avenue;
Park Avenue, the east side from Roosevelt Avenue to Garfield Avenue;
Park Avenue, both sides, from Summit Avenue to Oakwood Place;
Park Avenue, west side, from Garfield Avenue to 65 feet south of Garfield Avenue;
Park Place for its entire length;
Patton Street, both sides, from Lexington Boulevard to Clairemont Avenue;
Patton Street, both sides, from Lexington Boulevard to Truman Avenue;
Pitt Street, west side, from Cleveland Street to Crescent Avenue;
Platt Street, the south side from Third Street to North Oxford Avenue;
Platt Street, the north side, from Third Street to 150 feet east of First Street;
Platt Street, the north side, from Third Street to 100 feet east of Third Street;
Polk Avenue, south side, from Ellis Street to Clark Place;
Porter Avenue, west side, from Earl Street to Emery Street;
Prairie View Road (South), both sides, from Melby Street to Van Dresser Street;
Preston Road, east side, from 50 feet south of Truax Boulevard to 300 feet south of Campus Road;
Preston Road, west side, from 50 feet south of Truax Boulevard to Campus Road;
Prospect Drive, both sides, from Prairie Lane to 400 feet north;
Putnam Drive, both sides, from 750 feet east of Frederick Street to 844 feet east of Frederick Street
Putnam Street, the east side, from Madison Street to 80 feet north of Madison Street;
Putnam Street, both sides of the 300 block;
Putnam Street, west side, from Madison Street to a point 75 feet north of Putnam Street;
Putnam Street, west side from 180 feet north of Wisconsin Street to 250 feet north of Wisconsin Street;
Quarry Street, the south side, from Ferry Street to a point 50 feet west of Ferry Street;
Randall Street, south side, from 50 feet west of Mappa Street to 40 feet east of Mappa Street;
Richard Drive, the south side, from Stein Boulevard to Augusta Street;
Ripley Avenue, north side, from Frederic Street to the east end of Ripley Avenue;
Riverfront Terrace, the east side, from E. Madison Street to 80 feet south of E. Madison Street;
Riverfront Terrace, the east side, from Wisconsin Street to 130 feet south of Wisconsin Street;

Riverfront Terrace, the east side, from 330 feet south to 365 feet south of Wisconsin Street;
Riverfront Terrace, the north side, from N. Barstow Street to 385 feet west of N. Barstow Street;
Riverfront Terrace, the north side, from 525 feet west to 560 feet west of N. Barstow Street;
Riverfront Terrace, the north side, from 710 feet west to 920 feet west of N. Barstow Street (Celebration Plaza);
Riverfront Terrace, the south side, from N. Barstow Street to 360 feet west of N. Barstow Street;
Riverfront Terrace, the south side, from 525 feet west to 565 feet west of N. Barstow Street;
Riverfront Terrace, the south side, from 790 feet west to 905 feet west of N. Barstow Street (Celebration Plaza);
Riverfront Terrace, the west side, from E. Madison Street to 100 feet south of Wisconsin Street;
Riverfront Terrace, the west side, from 300 feet south to 365 feet south of Wisconsin Street;
Riverview Drive, the north side from Starr Avenue to 100 feet west of Starr Avenue;
Robert Road, the east side, from Folsom Street to Peters Drive;
Robert Road, the west side, from a point 100 feet south of Folsom Street to a point 100 feet south;
Robert Road, the west side, from the center of Briarwood Court to a point 100 feet south;
Roosevelt Avenue, the east side, from McKinley Avenue to Garfield Avenue;
Roosevelt Avenue, the north side, from State Street to a point 75 feet east of State Street;
Roosevelt Avenue, the north side, from State Street to 200 feet west of State Street;
Roosevelt Avenue, the north side, from Park Avenue to 60 feet east of Park Avenue;
Roosevelt Avenue, the south side from State Street to 300 feet west of Park Avenue;
Roosevelt Avenue, north side, from Wilson Street to 50 feet west of Wilson Street;
Roosevelt Avenue, the west side, from Garfield Avenue to 45 feet south of Garfield Avenue;
Roosevelt Avenue, the west side, from McKinley Avenue to 175 feet south of Garfield Avenue;
Roosevelt Avenue, west side, from 565 feet east of Wilson Street to a point on the south side of McKinley Avenue 520 feet east of Wilson Street;
Roosevelt Avenue, the north side, from Wilson Street to 30 feet east of Wilson Street;
Rudolph Road, both sides from Clairemont Avenue to East Lexington Boulevard;
Rust Street, the west side, from Garfield Avenue to Drummond Street;
Second Avenue, east side, from Beach Street to 100 feet south of Beach Street;
Second Avenue, the east side from Chippewa Street to Water Street;
Second Avenue, the west side from Grand Avenue to 30 feet south of Grand Avenue;
Second Avenue, the west side from Water Street to Chippewa Street;
Second Avenue, the west side from Lake Street to 150 feet south of Grand Avenue;
Second Avenue, both sides, from 290 feet north of Fulton Street to 365 feet north of Fulton Street;
Second Avenue, west side, from Oxford Avenue to 50 feet south of Oxford Avenue;
Second Street, the west side from Cedar Street to the north end of Second Street;
Seventh Street, the east side, from Fountain Street to 130 feet north of Fountain Street;
Seventh Avenue, the west side, from Grand Avenue to 85 feet south of Grand Avenue;
Short Street, both sides, for 100 feet in each direction from the Chippewa River Trail crossing;
Sixth Avenue, both sides, from 50 feet north of Congress Street to 50 feet south of Congress Street;
Sixth Avenue, both sides, from 60 feet north of Union Street to 60 feet south of Union Street;
Sixth Street, the west side, from Vine Street to a point 150 feet north of Vine Street;
Skeels Avenue, both sides from Mall Drive to London Road;
Speros Lane, the south and east sides, from a point 239 feet west of Kappus Drive to a point 370 feet west and south of Kappus Drive;
Spring Street, both sides, from a point 30 feet north of Bellevue Avenue to a point 30 feet south of Bellevue Avenue;
Spring Street, east side, the north 50 feet;
Starr Avenue, west side, from North Lane to Melby Street;
Starr Avenue, west side, from Eddy Lane to 70 feet north of Eddy Lane;
Starr Avenue, the west side from the north line of Birch Street to 80 feet north;
Starr Avenue, the east side from Birch Street to 100 feet south of Birch Street;
Starr Avenue, the west side from Birch Street to 50 feet south of Birch Street;
State Street, both sides, from Fillmore Avenue to 270 feet south of Hamilton Avenue;*
State Street, both sides, from Polk Avenue to Grant Avenue;
State Street, both sides from Washington Street to 100 feet south of Lexington Boulevard;
State Street, both sides, from Washington Street to Lexington Boulevard;
State Street, the west side, from 100 feet south of Lexington Boulevard to Truman Avenue;
State Street, the west side, from Marston Avenue to Washington Street;
State Street, the west side, from Marston Avenue to Washington Street;
Stein Boulevard, both sides, from Clairemont Avenue to MacArthur Avenue;
Stein Boulevard, both sides 100 feet north and south of MacArthur Avenue;

Stein Boulevard, both sides, 100 feet north and south of West Hamilton Avenue;
Stein Boulevard, the east side, from Hamilton Avenue to a point 260 feet north of Hamilton Avenue;
Stein Boulevard, the west side, from Jill Avenue to a point 75 feet north of Jill Avenue;
Stein Boulevard, the west side, from Jill Avenue to a point 75 feet south of Jill Avenue;
Summer Street, west side, from Main Street to 50 feet south of Main Street;
Summit Avenue, both sides from State Street to the Water Street Bridge;
Summit Avenue, south side, from State Street to 100 feet east;
Summit Avenue, the south side, from 70 feet west of Wilson Street to 30 feet east of Wilson Street;
Summit Avenue, the south side, from 30 feet west of Farwell Street to 30 feet east of Farwell Street;
Summit Street, the north side, from Balcom Street to 30 feet west;
Summit Street, the north side, from Centre Street to 30 feet east;
Sundet Road (20th Avenue), the north side, from 160 feet east of Club House Lane to Michaud Street (Lake Hallie Golf entrance drive);
Talmadge Street, the east side, from Main Street to 160 feet north;
Tenth Avenue, the east side, from Water Street to 100 feet south of Water Street;
Tenth Avenue, the west side, from Menomonie Street to Water Street;
Tenth Avenue, the west side, from Water Street to Lakeside Avenue;
Third Avenue, east side, from Fulton Street to 50 feet south of Fulton Street;
Third Avenue, west side, from 50 feet north of Congress Street to 50 feet south of Congress Street;
Third Avenue, east side, from 50 feet north of Central Street to 50 feet south of Central Street;
Third Avenue, west side, from 50 feet north of Union Street to 50 feet south of Union Street;
Third Street, the west side from Platt Street to 50 feet south of Vine Street;
Third Street, the west side from Vine Street to Maple Street;
Third Street, the west side from Platt Street to Truax Boulevard;
Third Street, the east side from Maple Street to Truax Boulevard;
Third Street, the east side from Platt Street to 100 feet north of Platt Street;
Third Street, the east side from Platt Street to 70 feet south of Vine Street;
Third Street, the east side from 70 feet north of Vine Street to 70 feet south of Maple Street;
Thorp Drive, both sides, from Summit Avenue to Marston Avenue;
Trimble Street, the east side, from E. Clairemont Avenue Frontage Road to 100 feet south;
Truax Boulevard, both sides, from N. Clairemont Avenue to Fourteenth Street;
University Drive, the south and west sides, from Hendrickson Drive to the frontage road;
University Drive East, the north side from University Drive North to the west end;
University Drive North, both sides from West Clairemont Avenue to University Drive East;
Valmont Avenue, both sides, from Fairfax Street to Hastings Way;
Valmont Avenue, south side, from Harding Avenue to Margaret Street;
Valmont Avenue, south side, from Hastings Way to Fairfax Street;
Venture Drive, both sides, from Prospect Drive to 500 feet north;
Vine Street, the north side from Third Street to Fourth Street;
Vine Street, the north side from Sixth Street to Seventh Street;
Vine Street, the south side from Seventh Street to 100 feet east;
Violet Avenue, both sides, from Teal Court to 200 feet west of Gerrard Avenue;
Wagner Avenue, the east side from Birch Street to 440 feet south;
Wagner Avenue, west side, from Birch Street to 110 feet south;
Warden Avenue, the east side, from 75 feet south of Necessity Street to 75 feet north of Necessity Street;
Washington Street, both sides, from State Street to a point 150 feet east of Farwell Street;
Water Street, north side, from Fifth Avenue to a point 75 feet west of Fifth Avenue;
Water Street, north side, from Fifth Avenue to a point 75 feet east of Fifth Avenue;
Water Street, the north side from the west line of Fifth Avenue to 40 feet west;
Water Street, the south side from the west line of Fifth Avenue to 148 feet west;
Water Street, the south side from Second Avenue to 50 feet west;
Water Street, the south side from Third Avenue to 75 feet west of Third Avenue;
Water Street, both sides, including both sides of the traffic island located therein, from First Avenue to Second Avenue;
Water Street, both sides, from Tenth Avenue (southern approach) to 220 feet east of Tenth Avenue (Southern approach);
W. Clairemont Avenue, North Frontage Road, north side from Craig Road to Hendrickson Drive, West Frontage Road;
W. Frank Street, both sides, from 455 feet west of Deblene Lane to 525 feet west of Deblene Lane;
West Grand Avenue, the south side from Fifth Avenue to 100 feet east of Fifth Avenue;
West Hamilton Avenue, both sides, 100 feet east and west of Stein Boulevard;

West Hamilton Avenue, the north side, from Craig Road to Eldorado Boulevard;
West Hamilton Avenue, the north side, from Eldorado Boulevard to 150 feet east;
West MacArthur Avenue, both sides, from State Street to a point 150 feet west of State Street;
Western Avenue, the east side, from Tobin Street to Redwood Drive;
Whipple Street, both sides, from Madison Street to Fulton Street;
Wilson Street, both sides, from Bartlett Court to Roosevelt Avenue;
Wilson Street, both sides, from Summit Avenue to Gilbert Avenue;
Wilson Street, the west side, from Roosevelt Avenue to 30 feet north of Roosevelt Avenue;
Wilson Street, the west side, from 30 feet south of McKinley Avenue to 30 feet north of McKinley Avenue;
Wilson Street, the west side, from 30 feet south of Garfield Avenue to 30 feet north of Garfield Avenue;
Wilson Street, the west side, from 30 feet south of Lincoln Avenue to 30 feet north of Lincoln Avenue;
Wilson Street, the west side, from Summit Avenue to 65 feet south of Summit Avenue;
Wisconsin Street, the south side of the 700 block;
Wisconsin Street, south side, from Dewey Street to 50 feet east of Dewey Street;
Wisconsin Street, north side, from Dewey Street to 80 feet east of Dewey Street;
Wisconsin Street, the north side from Putnam Street to 50 feet west;
Wisconsin Street, both sides, from Putnam Street east to end.
Wold Court, both sides, from Clairemont Avenue north to the first corner;
Wold Court, the north side, for the entire length.
Zephyr Hill Avenue, the west side, from Seymour Road to Peebles Street.
14th Street, the east side, from Truax Boulevard to 725 feet south of Truax Boulevard;
14th Street, the west side, from 225 feet south of Truax Boulevard to 350 feet south of Truax Boulevard; and
14th Street, the west side, from 475 feet south of Truax Boulevard to 600 feet south of Truax Boulevard.

(Ord. 7455 §1, 2021; Ord. 7452, 2021; Ord. 7438, 2021; Ord. 7346, 2019; Ord. 7313, 2018; Ord. 7261 §1, 2017; Ord. 7241 §4, 2017; Ord. 7206, 2016; Ord. 7166 §§1,2, 2015; Ord. 7148, 2015; Ord. 7135, 2015; Ord. 7088; 2014; Ord. 7087, 2014; Ord. 7086, 2014; Ord. 7082, 2014; Ord. 7081, 2014; Ord. 6997, 2012; Ord. 6985, 2011; Ord. 6955, 2011; Ord. 6946, 2011; Ord. 6884, 2009; Ord. 6799, 2007; Ord. 6798 §2, 2007; Ord. 6796 §2, 2007; Ord. 6785, 2007; Ord. 6782, 2007; Ord. 6765, 2007; Ord. 6738, 2006; Ord. 6708, 2006; Ord. 6697, 2006; Ord. 6696, 2006; Ord. 6658, 2006; Ord. 6657, 2006; Ord. 6654 §1, 2006; Ord. 6632, 2005; Ord. 6620, 2005; Ord. 6613, 2005; Ord. 6599, 2005; Ord. 6585, 2005; Ord. 6566, 2005; Ord. 6541, 2004; Ord. 6488, 2004; Ord. 6480, 2004; Ord. 6454, 2003; Ord. 6453, 2003; Ord. 6448, 2003; Ord. 6447, 2003; Ord. 6446, 2003; Ord. 6427, 2003; Ord. 6414, 2003; Ord. 6403, 2003; Ord. 6380, 2003; Ord. 6374, 2003; Ord. 6357, 2002; Ord. 6355, 2002; Ord. 6325, 2002; Ord. 6313, 2002; Ord. 6264, 2002; Ord. 6222, 2001; Ord. 6221, 2001; Ord. 6207, 2001; Ord. 6206, 2001; Ord. 6202, 2001; Ord. 6201, 2001; Ord. 6199, 2001; Ord. 6179; 2001; Ord. 6158, 2001; Ord. 6144, 2001; Ord. 6137, 2001; Ord. 6118, 2000; Ord. 6110, 2000; Ord. 6094, 2000; Ord. 6088, 2000; Ord. 6075, 2000; Ord. 6068, 2000; Ord. 6059, 2000; Ord. 6058, 2000; Ord. 6057, 2000; Ord. 6046, 2000; Ord. 6025 §1, 2000; Ord. 6023, 2000; Ord. 6003, 1999; Ord. 6002, 1999; Ord. 6001, 1999; Ord. 5985, 1999; Ord. 5981, 1999; Ord. 5969, 1999; Ord. 5968, 1999; Ord. 5959, 1999; Ord. 5940, 1999; Ord. 5905, 1998; Ord. 5890, 1998; Ord. 5868, 1998; Ord. 5863, 1998; Ord. 5850, 1998; Ord. 5812, §1, 1998; Ord. 5802, 1998; Ord. 5794, 1997; Ord. 5787, 1997; Ord. 5782, 1997; Ord. 5781, 1997; Ord. 5767, 1997; Ord. 5743, 1997; Ord. 5727, 1997; Ord. 5720, 1997; Ord. 5695, 1997; Ord. 5681, 1997; Ord. 5680, 1997; Ord. 5660, 1996; Ord. 5648 §1, 1996; Ord. 5642 §1, 1996; Ord. 5627 §1, 1996; Ord. 5611, 1996; Ord. 5590, 1996; Ord. 5576 §1, 1996; Ord. 5554 §2, 1995; Ord. 5553, 1995; Ord. 5506 §2, 1995; Ord. 5428 §2, 1994; Ord. 5410 §1, 1994; Ord. 5409, 1994; Ord. 5349 §1, 1993; Ord. 5358 §3, 1993; Ord. 5301, 1993; Ord. 5271, 1992; Ord. 5269 §4, 1992; Ord. 5221, 1992; Ord. 5217 §1, 1992; Ord. 5195 §2, 1991; Ord. 5172 §1, 1991; Ord. 5163, 1991; Ord. 5148 §1, 1991; Ord. 5140 §1, 1991; Ord. 5110 §5, 1990; Ord. 5090, 1990; Ord. 5022, 1990; Ord. 5002 §3, 1989; Ord. 4992, 1989; Ord. 4968 §2, 1989; Ord. 4924 §3, 1989; Ord. 4901 §2, 1989; Ord. 4878, 1989; Ord. 4873, 1988; Ord. 4868 §1, 1988; Ord. 4820, 1988; Ord. 4800, 1988; Ord. 4797 §1, 1988; Ord. 4795 §2, 1988; Ord. 4780, §3, 1987; Ord. 4735 §2, 1987; Ord. 4699 §2, 1987; Ord. 4691 §2, 1986; Ord. 4671 §3, 1986; Ord. 4653 §2, 1986; Ord. 4624, 1986; Ord. 4611 §2, 1986; Ord. 4593 §2, 1985; Ord. 4569, 1985; Ord. 4566 §5, 1985; Ord. 4546 §1, 1985; Ord. 4542 §1, 1985; Ord. 4528 §4, 1985; Ord. 4526 §3, 1985; Ord. 4522 §3, 1985; Ord. 4497 §1, 1984; Ord. 4489 §3, 1984; Ord. 4466 §1 §2, 1984; Ord. 4477 §1, 1984; Ord. 4476 §1, 1984; Ord. 4393 §§1, 2, 1983; Ord. 4369, 1983; Ord. 4355 §1, 1983; Ord. 4336 §1, 2, 3, 1983; Ord. 4312 §1, 1982; Ord. 4311 §1, 1982; Ord. 4271 §1, 1982; Ord. 4261 §1, 1982; Ord. 4238 §1, 1981; Ord. 4223, 1981; Ord. 4217, 1981; Ord. 4215, 1981; Ord. 4207, 1981; Ord. 4137, 1980; Ord. 4074 §1, 1980; Ord. 4062 §2, 1980; Ord. 4057 §1, 1980; Ord. 4056 §1, 1980; Ord. 4040 (part), 1979; Ord. 4028 §1, 1979; Ord. 3990, 1979; Ord. 3980, 1979; Ord. 3972, 1979; Ord. 3971, 1979; Ord. 3970, 1979; Ord. 3968 §1, 1979; Ord. 3961 §1, 1979; Ord. 3954, 1979; Ord. 3952 §1, 1979; Ord. 3940 §1, 1978; Ord. 3931 §1,

1978; Ord. 3930 §1, 1978; Ord. 3925, 1978; Ord. 3924, 1978; Ord. 3914 §2, 1978; Ord. 3909, 1978; Ord. 3901 §2, 1978; Ord. 3895 §§1, 4, 1978; Ord. 3892 §§1, 2, 3, 1978; Ord. 3882 §1, 1978; Ord. 3870 §§1, 2, 1978; Ord. 3852 §1, 1978; Ord. 3847 §§1, 4, 1978; Ord. 3836 §§1, 3, 5, 1978; Ord. 3820 §2, 1977; Ord. 3817 §2, 1977; Ord. 3814, 1977; Ord. 3802, 1977; Ord. 3795 §6, 1977; Ord. 3731, 1977; Ord. 3732, 1977; Ord. 3747, 1977; Ord. 3755 §1, 1977; Ord. 3779 §3, 1977; Ord. 3710, 1977; Ord. 3702, 1977; Ord. 3686, 1976; Ord. 3667, 1976; Ord. 3652, 1976; Ord. 3648, 1976; Ord. 3628, 1976; Ord. 3593(part), 1976; Ord. 3577 §1, 1976; Ord. 3571 (part), 1975; Ord. 3553 §§1 and 2, 1975; Ord. 3546 (part), 1975; Ord. 3553 §§1 and 2, 1975; Ord. 3546 (part), 1975; Ord. 3533 (part), 1975; Ord. 3531 (part), 1975; Ord. 3526 (part), 1975; Ord. 3506 (part), 1975; Ord. 3505 §1, 1975; Ord. 3491, 1974; Ord. 3470, 1974; Ord. 3461, 1974; Ord. 3445, 1974; Ord. 3444, 1974; Ord. 3432 §1, 1974; Ord. 3415, 1973; Ord. 3406 §I, 1973; Ord. 3405, 1973; Ord. 3404 §I, 1973; Ord. 3394 §I, 1973; Ord. 3370 §I, 1973; Ord. 3369 §I, 1973; Ord. 3363 §I, 1973; Ord. 3330 §I, 1973; Ord. 3329 §I, 1972; Ord. 3328 §I, 1972; Ord. 3323 §I, 1972; Ord. 3317 §I, 1972; Ord. 3313 §IX, 1972; Ord. 3288 §I, 1972; Ord. 3287 §I, 1972; Ord. 3279 §I, 1972; Ord. 3268 §I, 1972; Ord. 3244 §I, 1971; Ord. 3192 §I, 1972; Ord. 3166 §I, 1970; Ord. 3162 §I, 1970; Ord. 3098 §I, 1969; prior code §17.07(L)).

Parking of heavy vehicles prohibited. In this table, "heavy vehicle" means any vehicle or combination of vehicles, designed or used for transporting persons or property of any nature and having a gross weight of more than six thousand pounds. No person shall park, stop or leave standing any heavy vehicle on any of the following streets:

Regis Court, both sides, from Highland Avenue to the south end of Regis Court.
(Ord. 4040 (part), 1979).

TABLE IX

PARKING DURING SPECIFIED HOURS

Two a.m. to six a.m. When signs have been erected at or reasonably near the corporate limits of the city as provided in Section 349.13, Wisconsin Statutes, no person shall park any vehicle between the hours of two a.m. and six a.m. of any day, except physicians on emergency calls on any of the following streets:

Barstow Street, from Madison Street to Earl Street;
Bellinger Street, from Cameron Street to Beach Street;
Briarwood Court, both sides, from Robert Road to 140 feet east of Robert Road;
Dewey Street, from Wisconsin Street to Gibson Street;
Dewey Street, from Main Street to Lake Street;
Eau Claire Street, from Dewey Street to Graham Avenue;
Emery Street, from Farwell Street to Graham Avenue;
First Avenue, from Grand Avenue to Ann Street;
Galloway Street, the north side from 55 feet west of North Dewey Street to Hobart Street;
Galloway Street, the south side from North Dewey Street to Hobart Street;
Gibson Street, from Farwell Street to the Chippewa River;
Graham Avenue, from Eau Claire Street to Emery Street;
Grand Avenue, from Dewey Street to the Chippewa River;
Grand Avenue, from First Avenue to Oxford Avenue;
Gray Street, from Dewey Street to Graham Avenue;
Lake Street, from Dewey Street to Farwell Street;
Madison Street, from the Chippewa River to Babcock Street;
Main Street, from Doty Street to the Chippewa River;
Riverfront Terrace, from N. Barstow Street to Madison Street;
Seaver Street, from Farwell Street to Graham Avenue;
Washington Street, from Dewey Street to Farwell Street;
Water Street, from Second Avenue to Sixth Avenue;
Wisconsin Street, from Dewey Street to Barstow Street.
(Ord. 7167 §3, 2015; Ord. 7102 §2, 2014; Ord. 6621, 2005; Ord. 6501, 2004; Ord. 5217 §2, 1992*; Ord. 5148 §2, 1991; Ord. 4542 §3, 1985; Ord. 4432 §1, 1984; Ord. 4358 §2, 1983; Ord. 4336 §4, 1983; Ord. 4261 §2, 1982; Ord. 4128 §1, 1980; Ord. 3895 §1, 1978; Ord. 3870 §1, 1978; Ord. 3592 §1, 1976; Ord. 3527 §2, 1975; Ord. 3505 §2, 1975; Ord. 3340 §II, 1973; Ord. 3313 §XI, 1972; Ord. 3256 §I, 1971; Ord. 3235 §I, 1971; Ord. 3099 §I, 1969; prior code §17.07(3)).

Six a.m. to six p.m. When signs or parking meters are erected in any block giving notice thereof, no person shall park a vehicle between the hours of six a.m. and six p.m. except Sundays and holidays upon the following streets or portions of streets:

East Clairemont Avenue South Frontage Road, south side, from Fairfax Street to 100 feet east of Keith Street.
(Ord. 7167 §4, 2015; Ord. 7142, 2015; Ord. 5812 §2, 1998; Ord. 4432 §3, 1984; Ord. 4074 §2, 1980; Ord. 3952 §3, 1979; Ord. 3930 §2, 1978).

Two hours--Eight a.m. and four p.m. When signs or parking meters are erected in any block giving notice thereof, no person shall park a vehicle for longer than two hours at any time between the hours of eight a.m. and four p.m. except Saturdays and Sundays upon the following streets or portions of streets:

Ellis Street, west side, from Kelley Place to Polk Avenue;
Laurel Avenue, both sides, from Donnellan Lane to Birney Street;
Polk Avenue, north side, from Ellis Street to Clark Place;
Valmont Avenue, both sides, from Donnellan Lane to Birney Street.
(Ord. 6655, 2006; Ord. 6487, 2004; Ord. 4542 §3, 1985; Ord. 4109 §2, 1980; Ord. 3836 §2, 1978; Ord. 3313 §XII (Part), 1972; prior code §17.07(4)).

Two hours--Between eight a.m. and four p.m., Monday through Friday, except holidays. When signs or parking meters are erected in any block giving notice thereof, no person shall park a vehicle for longer than two hours between the hours of eight a.m. and four p.m., Monday – Friday, except holidays upon the following streets or portions of streets:

Congress Street, south side, from Fifth Avenue to the west;
Fulton Street, the south side, from Fifth Avenue to the west;
Sixth Avenue, east side, from West Grand Avenue to Fulton Street;
Union Street, south side, from Fifth Avenue to the west.
(Ord. 7290 §2, 2018)

Fifteen minutes-At all times. When signs or parking meters are erected in any block giving notice thereof, no person shall park a vehicle for longer than fifteen minutes at any time upon the following streets or portions of streets:

Galloway Street, the north side, from North Dewey Street to 55 feet to the west of North Dewey Street.
(Ord. 7102 §1, 2014)

Fifteen minutes--Between nine a.m. and six p.m. When signs or parking meters are erected in any block giving notice thereof, no person shall park a vehicle for longer than fifteen minutes between the hours of nine a.m. and six p.m. except Sundays and holidays upon the following streets or portions of streets:

Chestnut Street, the north side from Bellinger Street to 25 feet west of Sixth Avenue.
(Ord. 4750 §1, 1987; Ord. 4432 §5, 1984).

Thirty minutes. When signs or parking meters are erected in any block giving notice thereof, no person shall park a vehicle for longer than thirty minutes at any time upon the following streets or portions of streets:

Oxford Avenue, the east side, from Lake Street to 225 feet north of Lake Street. (Ord. 5506 §3, 1995).

Thirty minutes--Between seven a.m. and five p.m. When signs or parking meters are erected in any block giving notice thereof, no person shall park a vehicle for longer than thirty minutes between the hours of seven a.m. and five p.m. except Saturdays, Sundays and holidays upon the following streets or portions of streets:

Grand Avenue, north side, from Farwell Street to Dewey Street (Ord. 7337 §1, 2019).

Thirty minutes--Between nine a.m. and six p.m. When signs or parking meters are erected in any block giving notice thereof, no person shall park a vehicle for longer than thirty minutes between the hours of nine a.m. and six p.m. except Sundays and holidays upon the following streets or portions of streets:

Bellinger Street, the east side, from a point 100 feet north of Madison Street to Cameron Street;
Dewey Street, east side, from the north end of the bridge to the Milwaukee Railroad Crossing;
Main Street, the south side, from Talmadge Street to 120 feet east of Talmadge Street;
Putnam Street, west side from Wisconsin Street to 280 feet north of Wisconsin Street;
Second Avenue, the east side, from West Grand Avenue to Ann Street, except the first six parking spaces lying south of W. Grand Avenue;
Talmadge Street, the east side, from Main Street to 75 feet south of Main Street.
(Ord. 7167 §6, 2015; Ord. 6250, 2001; Ord. 6025 §2, 2000; Ord. 5002 §4, 1989; Ord. 4976, 1989; Ord. 4691 §3, 1986; Ord. 4546 §2, 1985; Ord. 4489 §4, 1984; Ord. 4470 §2, 1984; Ord.4393 §3, 1983; Ord. 4358 §3, 1983; Ord. 4297 §2, 1982; Ord. 3870 §6, 1978; Ord. 3852 §2, 1978; Ord. 3755 §2, 1977; Ord. 3629 §2, 1976).

Thirty minutes--Between eight a.m. and five p.m. When signs or parking meters are erected in any block giving notice thereof, no person shall park a vehicle for longer than thirty minutes between the hours of eight a.m. and five p.m. except Saturdays, Sundays and holidays upon the following streets or portions of streets:

Ball Street, north side, from a point one hundred seventy-five feet east to a point two hundred fifty feet east of Spring Street.
(Ord. 7167 §7, 2015; Ord. 5728, 1997; Ord. 4164 §2, 1981).

Thirty minutes--At all times. When signs or parking meters are erected in any block giving notice thereof, no person shall park a vehicle for longer than thirty minutes at any time upon the following streets or portions of streets:

Forest Street, the east side, from 250 feet north of the Chicago/Northwestern spur viaduct to 1,250 feet north of the Chicago/Northwestern spur viaduct. (Ord. 5195 §3, 1991).

One hour-Between six a.m. and six p.m. When signs or parking meters are erected in any block giving notice thereof, no person shall park a vehicle for longer than one hour between the hours of six a.m. and six p.m. except holidays upon the following streets or portions of streets:

Eau Claire Street, both sides, from Dewey Street to Farwell Street (Ord. 7167 §9, 2015)

One hour--Between nine a.m. and five p.m. When signs or parking meters are erected in any block giving notice thereof, no person shall park a vehicle for longer than one hour between the hours of nine a.m. and five p.m. except Sundays and holidays upon the following streets or portions of streets:

Seaver Street, the south side, from Farwell Street to Dewey Street;
Washington Street, north side, from Dewey Street to 75 feet east;
Washington Street, either side, from Farwell Street to Dewey Street.
(Ord. 7167 §8, 2015; Ord. 7059 §2, 2013)

One hour--Between nine a.m. and six p.m. When signs or parking meters are erected in any block giving notice thereof, no person shall park a vehicle for longer than one hour between the hours of nine a.m. and six p.m. except Sundays and holidays upon the following streets or portions of streets:

Cameron Street, north side from Westgate Road to Warden Street;
Cameron Street, the south side, from Sixth Street to 100 feet east of Sixth Street;
Esmond Road, west side, from Kirk Street to 75 feet south of Kirk Street;
Fairfax Street, the east side, from 200 feet south of Clairemont Avenue to Lexington Boulevard;
Germania Street, the west side from 150 feet to 200 feet south of Birch Street;
Putnam Street, east side from Galloway Street north to the railroad tracks;
Putnam Street, west side, from Galloway Street to Wisconsin Street;
University Drive East, the south side from University Drive North;
Wisconsin Street, south side, from Putnam Street East to a point 50 feet from the east end of Wisconsin Street. (Ord. 7059 §1, 2013; Ord. 6437, 2003; Ord. 6042 §1, 2000; Ord. 6025 §2, 2000; Ord. 5929, 1999; Ord. 5349 §2, 1993; Ord. 5217 §3, 1992; Ord. 5216 §1, 1992; Ord. 5140 §2, 1991; Ord. 5034 §1, 1989; Ord. 4868 §2, 1988; Ord 4666, 1986; Ord. 4566 §6, 1985; Ord. 4528 §5, 1985; Ord. 4489 §4, 1984; Ord. 4476 §6, 1984; Ord. 4467, 1984; Ord. 4415 §2, 1983; Ord. 4393 §4, 1983; Ord. 4358 §4, 1983; Ord. 4297 §1, 1982; Ord. 4061 (part), 1980; Ord. 4057 §2, 1980; Ord. 3912 §7, 1978; Ord. 3755 §3, 1977; Ord. 3687, 1976; Ord. 3629 §1, 1976; Ord. 3592 §2, 1976; Ord. 3577 §2, 1976; Ord. 3530 (part), 1975; Ord. 3527 §1, 1975; Ord.

3471, 1974; Ord. 3340 §III, 1973; Ord. 3313 §XIII(part), 1972; Ord. 3149 §I, 1971; Ord. 3100 §I(part), 1969; prior code §17.07(6)).

Two hours--Between nine a.m. and five p.m., Monday through Friday, except holidays. When signs or parking meters are erected in any block giving notice thereof, no person shall park a vehicle for longer than two hours between the hours of nine a.m. and six p.m. except Sundays and holidays upon the following streets or portions of streets:

Lake Street, south side, from 100 feet west of Second Avenue to Third Avenue. (Ord. 5576 §2, 1996).

Two hours—Between nine a.m. and five p.m., except Sundays and holidays. When signs or parking meters are erected in any block giving notice thereof, no person shall park a vehicle for longer than two hours between the hours of nine a.m. and five p.m. except Sundays and holidays upon the following streets or portions of streets:

Fifth Avenue, either side from Water Street to Chippewa Street;
Fifth Avenue, both sides, from Menomonie Street to Water Street;
First Avenue, the west side from Grand Avenue to Elizabeth Street;
First Avenue, the west side from Grand Avenue to Ann Street;
Fourth Avenue, both sides, from Riverside Avenue to Water Street;
Fourth Avenue, both sides, from Water Street to Chippewa Street;
Second Avenue, the east side, the first six parking spaces, located south of W. Grand Avenue;
Third Avenue, either side from Water Street to the south end of Third Avenue;
Third Avenue, both sides, from Water Street to Chippewa Street;
Water Street, either side from First Avenue to Sixth Avenue;
West Grand Avenue, both sides from First Avenue to Second Avenue.
(Ord. 7167 §10, 2015; Ord. 7109 §1, 2014; Ord. 7059 §4, 2013)

Two hours--Between nine a.m. and six p.m., except Sundays and holidays. When signs or parking meters are erected in any block giving notice thereof, no person shall park a vehicle for longer than two hours between the hours of nine a.m. and six p.m. except Sundays and holidays upon the following streets or portions of streets:

Beach Street, the north side from Whipple Street to Bellinger Street;
Bellinger Street, the west side, from a point 100 feet north of Madison Street to Cameron Street;
Moore Street, the east side, from Galloway Street to 240 feet south of Galloway Street;
Roosevelt Avenue, on the north side from the point of the curb inset by the Social Science Hall to the location of the drive leading into the university service area;
(Ord. 7290, 2018; Ord. 7241 §5, 2017; Ord. 7059 §3, 2013; Ord. 6885, 2009; Ord. 6884, 2009; Ord. 6798 §1, 2007; Ord. 6796 §1, 2007; Ord. 6565, 2005; Ord. 6515, 2004; Ord. 6514, 2004; Ord. 6042 §6, 2000; Ord. 6025 §2, 2000; Ord. 5849, 1998; Ord. 5381, 1994; Ord. 5288 §2, 1992; Ord. 5217 §4, 1992; Ord. 5216 §2, 1992; Ord 5140 §2, 1991; Ord. 5140 §2, 1991; Ord. 5094 §2, 1990; Ord. 5002 §4, 1989; Ord. 4976, 1980; Ord. 4868 §2, 1988; Ord. 4750 §2, 1987; Ord. 4653 §3, 1986; Ord. 4593 §3, 1985; Ord. 4566 §6, 1985; Ord. 4546 §2, 1985; Ord. 4528 §5, 1985; Ord. 4522 §4, 1985; Ord. 4476 §5, 1984; Ord. 4467, 1984; Ord. 4470 §3, 1984; Ord. 4446 §1, 1984; Ord. 4432 §4, 1984; Ord. 4415 §2, 1983; Ord. 4358 §5, 1983; Ord. 4355 §2, 1983; Ord. 4336 §4, 1983; Ord. 4311 §2, 1982; Ord. 4198, 1981; Ord. 4132, 1980; Ord. 4062 §1, 1980; Ord. 4028 §2, 1979; Ord. 3961 §3, 1979; Ord. 3946, 1978; Ord. 3940 §2, 1978; Ord. 3882 §2, 1978; Ord. 3870 §4, 1978; Ord. 3852 §3, 1978; Ord. 3847 §2, 1978; Ord. 3394 §I, 1973; Ord. 3367 §IV, 1973; Ord. 3313 §VIII (part), 1972; Ord. 3289 §I, 1972; Ord. 3194 §II, 1971; Ord. 3100, §I (part), 1969; prior code §17.077).

Two hours--Between six a.m. and six p.m., except holidays. When signs or parking meters are erected in any block giving notice thereof, no person shall park a vehicle for longer than two hours between the hours of six a.m. and six p.m., except holidays, upon the following streets or portions of streets:

Barstow Street, both sides, from Emery Street to Madison Street;
Dewey Street, both sides, from Wisconsin Street to Eau Claire Street, except on the Dewey Street bridge over the Eau Claire River;
Dewey Street, west side, from Gibson Street to 75 feet south of Gidson Street;
Eau Claire Street, south side, from Farwell Street to Graham Avenue;
Eau Claire Street, north side, from Farwell Street to Barstow Street;
Eau Claire Street, north side, from 110 feet west of Barstow Street to Graham Avenue;

Galloway Street, both sides, from Dewey Street to Hobart Street;
Gibson Street, north side, from Farwell Street to Graham Avenue;
Gibson Street, south side, from Barstow Street to Graham Avenue;
Graham Avenue, both sides, from Eau Claire Street to Gray Street;
Graham Avenue, east side, from Gray Street to Emery Street;
Graham Avenue, west side, from Gray Street to Seaver Street;
Grand Avenue, south side, from Graham Avenue to the east bank of the Chippewa River;
Grand Avenue, south side, from 40 feet east of Graham Avenue to Barstow Street;
Grand Avenue, north side, from Graham Avenue to Barstow Street;
Grand Avenue, both sides, from Farwell Street to Barstow Street;
Grand Avenue, north side, from Doty Street to Dewey Street;
Grand Avenue, south side, from Farwell Street to Dewey Street;
Grand Avenue, south side, from 120 feet east of Dewey Street to Doty Street;
Gray Street, south side, from Farwell Street to Graham Avenue;
Gray Street, north side, from 120 feet east of Barstow Street to Graham Avenue;
Hobart Street, both sides, from Madison Street to Galloway Street;
Main Street, north side, from 95 feet east of Barstow Street to the Chippewa River;
Main Street, south side, from 120 feet east of Barstow Street to the Chippewa River;
Main Street, south side, from 130 feet east of Dewey Street to Farwell Street;
Riverfront Terrace, east side, from 80 feet south to 250 feet south of Madison Street;
Riverfront Terrace, south side, from 360 feet west to 525 feet west of N. Barstow Street;
Riverfront Terrace, south side, from 565 feet west to 790 feet west of N. Barstow Street;
Riverfront Terrace, west side, from 100 feet south to 300 feet south of Wisconsin Street;
Riverfront Terrace, west side, from 365 feet south to 545 feet south of Wisconsin Street;
Seaver Street, north side, from Dewey Street to Graham Avenue;
Seaver Street, south side, from Farwell Street to Graham Avenue;
Wisconsin Street, both sides Dewey St to Riverfront Terrace. (Ord. 7432 §1, 2021; Ord. 7337 §2, 2019; Ord. 7241 §5, 2017; Ord. 7167 §12, 2015; Ord. 7109 §2, 2014; Ord. 7059 §6, 2013)

Two hours--Between seven a.m. and four p.m. except Saturday, Sundays and holidays. When signs or parking meters are erected in any block giving notice thereof, no person shall park a vehicle for longer than two hours between the hours of seven a.m. and four p.m. except Saturdays, Sundays and holidays upon the following streets or portions of streets:

Briggs Avenue, east side, from Pebbles Street to Tobin Street. (Ord. 7438, §2 2021; Ord. 7299, 2018)

Two hours--Between 9:00 a.m. and 6:00 p.m., except Saturdays, Sundays and holidays. When signs or parking meters are erected in any block giving notice thereof, no person shall park a vehicle for longer than two hours between the hours of 9:00 a.m. and 6:00 p.m., except Saturdays, Sundays and holidays, upon the following streets or portions of streets:

Lasker Drive, north side, from 100 feet west of Heights Drive to 650 feet west of Heights Drive;
(Ord. 7059 §5, 2013; Ord. 6766, 2007; Ord. 6709, 2006; Ord. 6660, 2006; Ord. 6621, 2005; Ord. 6375, 2003; Ord. 6042 §7, 2000).

Two hours--Between nine a.m. and five p.m., Sunday through Saturday. When signs or parking meters are erected in any block giving notice thereof, no person shall park a vehicle for longer than two hours between the hours of nine a.m. and five p.m., Sunday through Saturday, upon the following streets or portions of streets:

Grand Avenue (West), both sides, from Second Avenue to Oxford Avenue. (Ord. 7059 §7, 2013; Ord. 5140 §2, 1991).

Two hours--Between six a.m. and six p.m. When signs or parking meters are erected in any block giving notice thereof, no person shall park a vehicle for longer than two hours between the hours of six a.m. and six p.m. except Sundays and holidays upon the following streets or portion of Streets:

Cameron Street, the north side, from a point 50 feet east of Sixth Street to a point 231 feet east;
East Lexington Boulevard, north side, from Nimitz Street to May Street;
Menomonie Street, south side, from a point 100 feet west of Tenth Avenue to a point 150 feet west of Tenth Avenue;
Moore Street, east side, from Galloway Street to 150 feet south;
Moore Street, west side, from Galloway Street to the north end;

Starr Avenue, the west side, from a point 50 feet south of Birch Street to a point 150 feet south of Birch Street. (Ord. 6885, 2009; Ord. 6709, 2006; Ord. 5980, 1999; Ord. 5978, 1999; Ord. 5729, 1997; Ord. 4432 §2, 1984; Ord. 3968 §2, 1979; Ord. 3961 §§2, 4, 1979; Ord. 3902, 1978).

Two Hours--Between 2:00 p.m. and 6:00 p.m., except holidays. When signs or parking meters are erected in any block giving notice thereof, no person shall park a vehicle for longer than two hours between the hours of 2:00 p.m. and 6:00 p.m., except holidays, upon the following streets or portions of streets:

Barstow Street, west side, from the south end of the Eau Claire River bridge to a point 60 feet north;
Grand Avenue, north side, from Barstow Street to 145 feet west of Barstow Street. (Ord. 7167 §11, 2015, Ord. 6042 §5, 2000).

Two hours--Between 7:30 a.m. and 3:00 p.m. During School Days. When signs or parking meters are erected in any block giving notice thereof, no person shall park a vehicle for longer than two hours upon the following streets or portions of streets:

Agnes Street, both sides, from Benton Avenue to Hopkins Avenue;
Agnes Street, both sides, from Lloyd Avenue to 120 feet south of Lloyd Avenue;
Goff Avenue, both sides, from Agnes Street to Keith Street;
Henry Avenue, both sides, from Keith Street to Marilyn Drive;
Hopkins Avenue, both sides, from Rudolph Road to Agnes Street;
Irene Drive, both sides, from Skeels Avenue to Taft Avenue;
Kay Street, both sides, from Henry Avenue to Lexington Boulevard;
Keith Street, the west side, from Goff Avenue to Rist Avenue;
Keith Street, both sides, from Henry Avenue to Skeels Avenue;
Keith Street, both sides, from Taft Avenue to Henry Avenue;
Lexington Boulevard, both sides, from Agnes Street to Keith Street and 224 feet east of Keith Street to Kay Street;
Lloyd Avenue, both sides, from Rudolph Road to Agnes Street;
Marilyn Drive, both sides, from Taft Avenue to Henry Avenue;
Piedmont Road, both sides, from Saturn Avenue to Comet Court, except the north side from Saturn Avenue to Uranus Avenue;
Piedmont Road, the north side, from Saturn Avenue to Uranus Avenue;
Rist Avenue, both sides, from Rudolph Road to Agnes Street.
Taft Avenue, both sides, from Agnes Street to Irene Drive;
Taft Avenue, both sides, from Keith Street to Marilyn Drive;
Uranus Avenue, both sides, from Piedmont Road to 100 feet north of Piedmont Road.
(Ord. 6204, 2001; Ord. 6204, 2001; Ord. 6203, 2001; Ord. 6109, 2000; Ord. 6024, 2000; Ord. 5979, 1999; Ord. 5941, 1999; Ord. 5906, 1998; Ord. 5833, 1998; Ord. 5812 §2, 1998; Ord. 5801, 1998; Ord. 5628 §2, 1996; Ord. 5627 §2, 1996; Ord. 5626, 1996; Ord. 5540 §1, 1995; Ord. 5498, 1995; Ord. 5482, 1995; Ord. 5094 §3, 1990).

Two Hours--Except Between 7:30 a.m. and 3:00 p.m. During School Days. When signs or parking meters are erected in any block giving notice thereof, no person shall park a vehicle for longer than two hours except between the hours of 7:30 a.m. and 3:00 p.m. during school days, upon the following streets or portions of streets;

Clairemont Avenue South Frontage Road, the south side, from Keith Street to Agnes Street.
(Ord. 5812 §2, 1998).

Two Hours--Between 7:00 a.m. and 2:00 p.m. When signs or parking meters are erected in any block giving notice thereof, no person shall park a vehicle for longer than two hours between the hours of 7:00 a.m. and 2:00 p.m., except Saturdays, Sundays and holidays, upon the following streets:

Sherwin Avenue, both sides, from Enterprise Street east to the city limits.
(Ord. 5172 §2, 1991).

Two Hours--Between 8:00 a.m. and 6:00 p.m. When signs or parking meters are erected in any block giving notice thereof, no person shall park a vehicle for longer than two hours between the hours of 8:00 a.m. and 6:00 p.m., upon the following streets or portions of streets:

Clairemont Avenue North Frontage Road, the north side, from Jordan Court to 900 feet west of Jordan Court. (Ord. 5812 §2, 1998).

Two Hours--Between 11:00 a.m. and 6:00 p.m., except Saturdays, Sundays and holidays. When signs or parking meters are erected in any block giving notice thereof, no person shall park a vehicle for longer than two hours between the hours of 11:00 a.m. and 6:00 p.m., except Saturdays, Sundays and holidays, upon the following streets or portions of streets:

Eau Claire Street, north side, from Barstow Street to 110 feet west of Barstow Street. (Ord. 6042 §3, 2000).

Two hours--When posted. When signs or parking meters are erected in any block giving notice thereof, no person shall park a vehicle for longer than two hours upon the following streets or portions of streets:

Clairemont Avenue East Frontage Road, the east side, from Frank Street to Warden Street;
Clairemont Avenue North Frontage Road, the north side, from Trimble Street to Jordan Court;
Clairemont Avenue North Frontage Road, the north side, from 900 feet west of Jordan Court to May Street;
Clairemont Avenue North Frontage Road, the north side, from 670 feet east of Trimble Street to Rudolph Road;
Clairemont Avenue North Frontage Road, the north side, from 500 feet west of Craig Road to 1,475 feet west of Craig Road;
Clairemont Avenue North Frontage Road, the south side, from Craig Road to Hendrickson Drive West Frontage Road;
Clairemont Avenue South Frontage Road, the south side, from Trimble Street to Agnes Street;
Hastings Way East Frontage Road, west side, from Seymour Road to Peebles Street;
Hastings Way East Frontage Road, the east side, from Shady Grove Road to 325 feet south of LaSalle Street;
Hastings Way East Frontage Road, the east side, from 1,137 feet south of Hemlock Lane to Eddy Lane;
Hastings Way East Frontage Road, both sides, from Eddy Lane to 600 feet south of Pinehurst Road;
Jones Street, on the north side of the 400 block;
Mercantile Drive, the west side, from Moholt Drive to West Frank Street;
Ninth Avenue, the west side, from Water Street to Menomonie Street;
Water Street, either side of the 300, 400 and 500 blocks;
Western Avenue, west side, from Eddy Lane to 535 feet south of Eddy Lane.
(Ord. 7261 §2 2017; Ord. 7167 §13, 2015; Ord. 6326, 2002; Ord. 5934, 1999; Ord, 5812 §2, 1998; Ord. 5613, 1996; Ord. 4542 §3, 1985; Ord. 4535, 1985; Ord. 4489 §4, 1984; Ord. 3862, 1978; Ord. 3313 §XIII(part), 1972; Ord. 3100 §I(part), 1969; prior code §17.07(8)).

Three hours--Between nine a.m. and six p.m. When signs or parking meters are erected in any block giving notice thereof, no person shall park a vehicle for longer than three hours between the hours of nine a.m. and six p.m. except Sundays and holidays upon the following streets or portions of streets:

Second Avenue, west side between Grand Avenue and Elizabeth Street;
Second Avenue, east side, from Grand Avenue to a point 150 feet north of Grand Avenue. (Ord. 3847 §3, 1978).

Parking Prohibited--May 2 to October 31. When signs or parking meters are erected in any block giving notice thereof, no person shall park a vehicle from May 2 to October 31 upon the following streets or portions of streets:

Clairemont Avenue North Frontage Road, the south side, from Trimble Street to 670 feet east of Trimble Street;
Hastings Way East Frontage Road, the west side, from Shale Ledge Road to 300 feet north of Somona Parkway. (Ord. 5812 §2, 1998).

Parking prohibited--Between 7:00 a.m. and 4:00 p.m. During School Days. When signs are erected in any block giving notice thereof, no person shall park a vehicle between the hours of 7:00 a.m. and 4:00 p.m., except Saturdays, Sundays, and holidays, when school is in session upon the following streets or portions of streets:

Keith Street, the west side, from Fenwick Avenue to Lyndale Avenue. (Ord. 7450, 2021)

Parking prohibited--Between 7:00 a.m. and 5:30 p.m. When signs or parking meters are erected in any block giving notice thereof, no person shall park a vehicle between the hours of 7:00 a.m. and 5:30 p.m., except Saturdays, Sundays, and holidays, upon the following streets or portions of streets:

Western Avenue, the west side, from Tobin Street to Seymour Road. (Ord. 6644, 2005).

Parking Prohibited--Between 7:30 a.m. and 5:30 p.m. When signs or parking meters are erected in any block giving notice thereof, no person shall park a vehicle between the hours of 7:30 a.m. and 5:30 p.m., except Saturdays, Sundays and holidays, upon the following streets or portions of streets:

Abbe Hill Drive, west side, from 233 feet south of Mandy Lane to 430 feet south of Mandy Lane;
Ellis Street, both sides, from MacArthur Avenue to 60 feet south of MacArthur Avenue;
Wagner Avenue, the west side, from a point 150 feet north of Birch Street to Omaha Street. (Ord. 6425, 2003; Ord. 5787, 1997).

Parking prohibited--Between eight a.m. and two p.m. When signs or parking meters are erected in any block giving notice thereof, no person shall park a vehicle between the hours of eight a.m. and two p.m., except Sundays and holidays, upon the following streets or portions of streets:

Oakwood Place, south side, from State Street to Park Avenue. (Ord. 5683, 1997; Ord. 4542 §2, 1985).

Parking prohibited--Between 8:00 a.m. and 3:00 p.m. When signs or parking meters are erected in any block giving notice thereof, no person shall park a vehicle between the hours of 8:00 a.m. and 3:00 p.m., except Saturdays, Sundays, and holidays, upon the following streets or portions of streets:

Bartlett Court, the north side, from State Street to Wilson Street. (Ord. 6487, 2004).

Parking prohibited--Between 8:00 a.m. and 4:00 p.m. When signs or parking meters are erected in any block giving notice thereof, no person shall park a vehicle between the hours of 8:00 a.m. and 4:00 p.m., except Saturdays, Sundays and holidays, upon the following streets or portions of streets:

Sixth Street, the west side from 93 feet south of Maxon Street to 150 feet south of Maxon Street. (Ord. 5094 §1, 1990).

Parking prohibited--Between eight a.m. and five p.m. When signs or parking meters are erected in any block giving notice thereof, no person shall park a vehicle between the hours of eight a.m. and five p.m., except Sundays and holidays, upon the following streets or portions of streets:

Lincoln Avenue, the south side from Rust Street to Wilson Street. (Ord. 6558, 2004; Ord. 4542 §2, 1985).

Parking prohibited--Between 8:00 a.m. and 5:00 p.m. When signs or parking meters are erected in any block giving notice thereof, no person shall park a vehicle between the hours of 8:00 a.m. and 5:00 p.m., Monday through Friday, except holidays, upon the following streets or portions of streets:

Doty Street, the west side, from Main Street to Gray Street. (Ord. 5589, 1996).

Parking prohibited--Between 9:00 a.m. and 4:00 p.m. When signs or parking meters are erected in any block giving notice thereof, no person shall park a vehicle between the hours of 9:00 a.m. and 4:00 p.m., except Saturdays, Sundays, and holidays, upon the following streets or portions of streets:

Lincoln Avenue, the south side, from State Street to Wilson Street. (Ord. 6559, 2004).

Parking prohibited--Between nine a.m. and nine p.m. When signs or parking meters are erected in any block giving notice thereof, no person shall park a vehicle between the hours of nine a.m. and nine p.m. upon the following streets or portions of streets:

Clairemont Avenue, South Frontage Road, the south side, from the west end of such frontage road to Stein Boulevard;

Hendrickson Drive, East Frontage Road, the east side, from the north end of such frontage road to Craig Road;

Richard Drive, the north side, from a point 400 feet east of Ruth Street to Ruth Street;

Ruth Street, the west side, from Richard Drive to MacArthur Avenue. (Ord. 3931 §2, 1978).

Parking limit--Two hours between eight a.m. and four p.m. When signs or parking meters are erected in any block giving notice thereof, no person shall park a vehicle for longer than two hours between the hours of eight a.m. and four p.m. except Saturdays and Sundays upon the following streets or portions of streets:

Gilbert Avenue, south side, from State Street to Thorpe Drive;

Wold Court, the south side of the 100 block. (Ord. 5369 §2, 1993; Ord. 3432 §2, 1974; Prior code §17.07(10m)).

Parking prohibited on Sundays. When signs or parking meters are erected in any block giving notice thereof, no person shall park a vehicle on any Sunday upon the following streets or portions of streets:

Broadway Street, the north side, from Third Avenue to 80 feet west of Third Avenue;

Lake Street, the south side from Fourth Avenue to 120 feet east of Fourth Avenue. (Ord. 5783, 1997; Ord. 4750 §3, 1987; Ord. 4701, 1987; Ord. 3668, 1976).

Parking prohibited on Sundays--Nine a.m. to twelve noon. When signs or parking meters are erected in any block giving notice thereof, no person shall park a vehicle on any Sunday between the hours of nine a.m. and twelve noon upon the following streets or portions of streets:

Fourth Avenue, the west side, from Niagara Street to a point 100 feet north of Niagara Street;

Niagara Street, the north side, from Fourth Avenue to a point 75 feet west of Fourth Avenue. (Ord. 3952 §2, 1979).

Parking prohibited--Passenger loading zone. When signs are erected in any block giving notice thereof, no person shall park a vehicle upon the following streets or portions of streets, except temporarily for the purpose of loading or unloading passengers:

Agnes Street, west side, from Sherwin Avenue to a point 100 feet south of Sherwin Avenue;

Cleveland Street, the north side, from 250 feet east of Fisher Street to 450 feet east of Fisher Street;

Eau Claire Street, south side, from 100 feet west of South Barstow Street to 75 feet west of South Barstow Street;

Graham Avenue, west side from Eau Claire Street to Gibson street;

Goff Avenue, the south side, from Agnes Street to a point 100 feet east of Agnes Street;

Highland Avenue, the north side, from Agnes Street to a point 88 feet west of Agnes Street;

Highland Avenue, the north side, from a point 225 feet west of Agnes Street to a point 288 feet west of Agnes Street;

Putnam Street, the east side, from Wisconsin Street to 90 feet south of Wisconsin Street. (Ord. 7322, 2019; Ord. 6087, 2000; Ord. 5800, 1998; Ord. 5748, 1997; Ord. 5410 §2, 1994; Ord. 3779 §5, 1977).

Parking prohibited--Between six a.m. and six p.m. When signs or parking meters are erected in any block giving notice thereof, no person shall park a vehicle between the hours of six a.m. and six p.m. upon the following streets or portions of streets:

Hendrickson Drive, West Frontage Road, west side, from West Clairemont Avenue North Frontage Road to Heights Drive. (Ord. 4238 §2, 1981).

Parking Prohibited; Loading and Unloading Passengers Only; 7:30 a.m. to 4:00 p.m. During School Days. When signs or parking meters are erected in any block giving notice thereof, no person shall park a vehicle, except for loading or unloading passengers, during the days that the schools of the Eau Claire Area School District are in session, between the hours of 7:30 a.m. and 4:00 p.m. upon the following streets or portions of streets:

Babcock Street, west side, from Cameron Street to Maxon Street;

Barland Street, north side, from 125 feet east of McGraw Street to 215 feet east of McGraw Street;

Cameron Street, north side, from Babcock Street to Whipple Street.
Eddy Lane, north side, from 75 feet west of Starr Avenue to 275 feet west of Starr Avenue;
Eddy Lane, north side, from 375 feet west of Starr Avenue to 30 feet east of Mercury Avenue;
Eighth Street, the west side, from 445 feet south of Truax Boulevard to 590 feet south of Truax Boulevard;
Fillmore Avenue, south side, from 340 feet east of May Street to 275 feet west of Eisenhower Street;
Hudson Street, north side, from Seventh Avenue to Eighth Avenue;
Lake Street, south side, from S. Dewey Street to 150 feet west of S. Dewey Street;
Lee Street, the west side, from 115 feet south of Hoover Avenue to 362 feet south of Hoover Avenue;
MacArthur Avenue, north side, from Ellis Street (north leg) to 460 feet west;
MacArthur Avenue, south side, from 100 feet west of Ellis Street (south leg) to 420 feet west of Ellis Street (south leg);
Maxon Street, south side, from Whipple Street to Babcock Street;
McGraw Street, east side, from Main Street to Barland Street;
Pine Lodge Road, the west side, from E. Hamilton Avenue to 150 feet south of Southwind Drive;
Starr Avenue, west side, from 230 feet north of Eddy Lane to 440 feet north of Eddy Lane.
(Ord. 7120, 2015; Ord. 6803, 2007; Ord. 6633, 2005; Ord. 6549, 2004; Ord. 6436, 2003; Ord. 6428, 2003; Ord. 6381, 2003; Ord. 6347, 2002; Ord. 5708 §1, 1997; Ord. 5648 §2, 1996; Ord. 4497 §2, 1984).

Parking prohibited--Eau Claire transit loading only, except Sundays. When signs are erected in any block giving notice thereof, no person shall park a vehicle, except for Eau Claire transit passenger loading or unloading, except Sundays, upon the following street(s):

Park Avenue, west side, from 65 feet south of Garfield Avenue to 215 feet south of Garfield Avenue. (Ord. 6329, 2002).

Taxicab loading zones -- Between 10:00 p.m. and 3:00 a.m. When signs or parking meters are erected in any block giving notice thereof, no person shall park a vehicle between the hours of 10:00 p.m. and 3:00 a.m., except for taxicabs loading or unloading passengers, upon the following streets:

Fourth Avenue, both sides, from Water Street to a point 75 feet north of Water Street. (Ord. 5834, 1998).

Loading zones--Between eight a.m. and eleven a.m. When signs or parking meters are erected in any block giving notice thereof, no person shall park a vehicle except for loading or unloading between the hours of eight a.m. and eleven a.m., except Sundays and holidays, upon the following streets:

Eau Claire Street, north side, from Barstow Street to 110 feet west of Barstow Street. (Ord. 6117, 2000; Ord. 4522 §4, 1985; Ord. 4352, 1983).

Loading Zones--Between eight a.m. and two p.m. When signs or parking meters are erected in any block giving notice thereof, no person shall park a vehicle except for loading or unloading between the hours of eight a.m. and two p.m., except Sundays and holidays, upon the following streets:

Barstow Street, west side, from the south end of the Eau Claire River Bridge to a point 60 feet north;
Gibson Street, south side, from Dewey Street to 100 feet east of Dewey Street;
Grand Avenue, south side, from Barstow Street to 110 feet west of Barstow Street;
Graham Avenue, east side, from Main Street to 105 feet north of Main Street;
Graham Avenue, east side, from 90 feet north of Gibson Street to 90 feet south of Eau Claire Street.
(Ord. 7432 §2, 2021; Ord. 4868 §2, 1988; Ord. 4593 §3, 1985; Ord. 4522 §4, 1985; Ord. 4476 §2, 1984; Ord. 4446 §3, 1984; Ord. 4415 §3, 1983; Ord. 4358 §1, 1983).

Loading zones--No parking. When signs or parking meters are erected in any block giving notice thereof, no person shall park a vehicle at any time, except Sundays and holidays, except for loading and unloading, upon the following streets or portions of streets:

Barstow Street, east side, from Gibson Street to 75 feet south of Gibson Street;
Dewey Street, west side, from Grand Avenue to 110 feet south of Grand Avenue;
Fourth Avenue, the east side, a nine foot area (one parking space), approximately 100 feet south of Water Street;
Gibson Street, south side from Barstow Street to 130 feet east of Barstow Street;
Highland Avenue, north side, from 120 feet west of Chapin Street to 180 feet west of Chapin Street;

Main Street, north side, from 115 feet east of Barstow Street to 140 feet east of Barstow Street;
Margaret Street, east side, from Hogeboom Avenue to 70 feet north of Hogeboom Avenue. (Ord. 5269 §5, 1992; Ord. 5034 §1, 1989; Ord. 4653 §3, 1986; Ord. 4528 §5, 1985; Ord. 4522 §4, 1985; Ord. 4489 §4, 1984; Ord. 4466, §3, 1984).

Loading zones--Between 7:30 a.m. and 5:30 p.m. When signs or parking meters are erected in any block giving notice thereof, no person shall park a vehicle except for loading and unloading between the hours of 7:30 a.m. and 5:30 p.m., except Sundays or holidays, upon the following streets:

N. Oxford Avenue, east side, from a point 100 feet north of Platt Street to a point 150 feet north of Platt Street;
Park Avenue, west side, from 215 feet south of Garfield Avenue to Roosevelt Avenue. (Ord. 6328, 2002; Ord. 5780, 1997; Ord. 4795 §3, 1988; Ord. 4497 §2, 1984).

TABLE X

PARKING METER LOCATIONS

Parking meters. Parking meters shall be installed by the traffic engineer at the following locations:

South Dewey Street from Eau Claire River to Eau Claire Street.

(Ord. 7479 §5, 2022, Ord. 7167 §15, 2015; Ord. 4723 §3, 1987; Ord. 4653 §4, 1986; Ord. 4528 §1, 1985; Ord. 4522 §6, 1985; Ord. 4311 §3, 1982; Ord. 4243, 1981).

TABLE XI

TRAFFIC CONTROL SIGNALS

Traffic Control Signals. In the interest of public safety, traffic control signals are hereby authorized to be installed at the following locations:

Barstow Street and Madison Street;
Bellinger Street and Madison Street;
Birch Street and Starr Avenue;
Birch Street/River Prairie Drive and Galloway Street;
Brackett Avenue, Harding Avenue and Rudolph Road;
Brackett Avenue and Keith Street;
Eau Claire Street and Farwell Street;
Farwell Street and Lake Street;
Farwell Street and Madison Street;
Farwell Street and Main Street;
Farwell Street and Washington Street;
Fifth Avenue and Lake Street;
Fifth Avenue and Water Street;
First Avenue and Lake Street;
Forest Street/Riverfront Terrace and Madison Street;
Golf Road and the easterly Oakwood Mall entrance;
Golf Road and Fairfax Street;
Golf Road and London Road;
Golf Road and Oakwood Hills Parkway;
Graham Avenue and Lake Street;
Madison Street and Oxford Avenue;
State Street and Summit Avenue.
(Ord. 7121, 2015; Ord. 6851, 2008; Ord. 6597, 2005; Ord. 6517, 2004; Ord. 6449, 2003; Ord. 5894, 1998; Ord. 5262 §2, 1992; Ord. 4641 §3, 1986; Ord. 4540 §2, 1985).

TABLE XII

PARKING, STOPPING AND STANDING PROHIBITED

Streets designated--Authority. No person shall park, stop or leave standing any vehicle between the hours of seven a.m. and twelve midnight of any day, and when signs have been erected at or reasonably near the corporate limits of the city as provided in section 349.13, Wisconsin Statutes, no person shall park, stop or leave standing any vehicle between the hours of twelve midnight and seven a.m. of any day, except physicians on emergency calls, on any of the following streets:

Abbe Hill Drive, east side, from 233 feet south of Mandy Lane to 430 feet south of Mandy Lane;
Abbe Hill Drive, both sides, from Mandy Lane to 198 feet north of Mandy Lane;
Eddy Lane, the north side, from Starr Avenue to 75 feet west of Starr Avenue;
Eddy Lane, the north side, from 275 feet west of Starr Avenue to 375 feet west of Starr Avenue;
Eddy Lane, the south side, from Starr Avenue to 30 feet west of Moon Avenue;
Eighth Street, the west side from 190 feet southerly from Truax Boulevard to 265 feet southerly from Truax Boulevard;
Eighth Street, the east side from 205 feet southerly from Truax Boulevard to 280 feet southerly from Truax Boulevard;
Eisenhower Street, the west side, from 55 feet north of Taft Avenue to 26 feet south of Taft Avenue;
Hastings Way, both sides, Seymour Road to Clairemont Avenue;
Mars Avenue, both sides, from Sunny Lane to Frisbie Lane.
(Ord. 6634, 2005; Ord. 6458, 2003; Ord. 6424, 2003; Ord. 5891, 1998; Ord. 5524 §3, 1995; Ord. 4723 §4, 1987; Ord. 4683 §3, 1986; Ord. 4497 §3, 1984; Ord. 4477 §3, 1984; Ord. 4489 §6, 1984).

No Parking, Stopping or Standing--7:30 a.m. to 3:00 p.m., During School Days. When signs or parking meters are erected in any block giving notice thereof, no person shall park, stop or leave standing any vehicle during the days that the schools of the Eau Claire Area School District are in session, between the hours of 7:30 a.m. and 3:00 p.m., upon the following streets or portions of streets:

Agnes Street, both sides, from Benton Avenue to Donald Avenue;
Agnes Street, both sides, from the Clairemont Avenue Frontage Road to Taft Avenue;
Agnes Street, both sides, from Donald Avenue to Lloyd Avenue;
Benton Avenue, both sides, from Agnes Street to Keith Street;
Benton Avenue, both sides, from Agnes Street to Rudolph Road;
Clairemont Avenue, South Frontage Road, the south side, from Keith Street to Agnes Street;
Donald Avenue, both sides, from Rudolph Road to Keith Street;
Frisbie Lane, both sides, from Mars Avenue to Venus Avenue;
Frisbie Lane, both sides, from Mercury Avenue to Moon Avenue;
Frisbie Lane, both sides, from Saturn Avenue to Mars Avenue;
Frisbie Lane, both sides, from Uranus Avenue to Saturn Avenue;
Frisbie Lane, from Mercury Avenue to Venus Avenue;
Hopkins Avenue, both sides, from Agnes Street to Keith Street;
Jupiter Avenue, both sides, from Frisbie Lane to Eddy Lane;
Jupiter Avenue, both sides, from Frisbie Lane to the south end of the cul-de-sac;
Keith Street, both sides, from East Clairemont Avenue to Taft Avenue;
Keith Street, the west side, from Rist Avenue to Clairemont Avenue;
Lloyd Avenue, both sides, from Agnes Street to Keith Street;
Marquette Street, both sides, from Starr Avenue to a point 1,750 feet west of Starr Avenue;
Mars Avenue, both sides, from Frisbie Lane to Eddy Lane;
Mars Avenue, both sides, from Piedmont Road to Sunny Lane;
Mercury Avenue, both sides, from Frisbie Lane north to cul-de-sac;
Mercury Avenue, both sides, from Sunny Lane to Frisbie Lane;
Mercury Avenue, the east side, from Marquette Street to Sunny Lane;
Mercury Avenue, from Piedmont Road to Sunny Lane;
Piedmont Road, both sides, from Starr Avenue to 300 feet east of Uranus Avenue;
Piedmont Road, the north side, from Saturn Avenue to Uranus Avenue;
Piedmont Road, the north side, from Uranus Avenue to Comet Court;
Rist Avenue, both sides, from Agnes Street to Keith Street;
Saturn Avenue, from Piedmont Road to Frisbie Lane;
Saturn Avenue, from Frisbie Lane to Eddy Lane;
Starr Avenue, both sides, from Marquette Street to Piedmont Road;
Sunny Lane, both sides, from the end east of Mercury Avenue to Mars Avenue.
Taft Avenue, both sides, from Irene Drive to Keith Street;
Uranus Avenue, both sides, from Piedmont Road to 100 feet north of Piedmont Road;

Uranus Avenue, from Piedmont Road to Eddy Lane;
Venus Avenue, from Sunny Lane to the cul-de-sac north of Frisbie Lane.
(Ord. 6284, 2002; Ord. 6270, 2002; Ord. 6253, 2002; Ord. 6252, 2002; Ord. 6247, 2001; Ord. 6246, 2001; Ord. 6225, 2001; Ord. 6205, 2001; Ord. 6203, 2001; Ord. 6225, 2001; Ord. 6155, 2001; Ord. 6136, 2001; Ord. 6128, 20001; Ord. 6116, 2000; Ord. 6089, 2000; Ord. 6066, 2000; Ord. 6060, 2000; Ord. 6000, 1999; Ord. 5907, 1998; Ord. 5647, 1996; Ord. 5642 §2, 1996; Ord. 5627 §3, 1996; Ord. 5552, 1995; Ord. 5540 §2, 1995; Ord. 5447, 1994; Ord. 5369 §3, 1993; Ord. 5342, 1993; Ord. 5278 §3, 1992; Ord. 4956, 1989; Ord. 4755 §2, 1987).

No Parking, Stopping or Standing - 7:30 a.m. to 4:00 p.m., During School Days. When signs or parking meters are erected in any block giving notice thereof, no person shall park, stop or leave standing any vehicle during the days that the schools of the Eau Claire Area School District are in session, between the hours of 7:30 a.m. and 4:00 p.m., upon the following streets or portions of streets:

Fenwick Avenue, the north side, from Lee Street to Margaret Street;
Hamilton Avenue E., both sides, from Hastings Way to Pine Lodge Road.
Laurel Avenue, the north side, from Lee Street to Margaret Street;
Lee Street, the east side, from Laurel Avenue to 150 feet north of Fenwick Avenue;
Lee Street, the west side, from Harding Avenue to 417 feet north of Harding Avenue;
Lee Street, the west side, from Hoover Avenue to 115 feet south of Hoover Avenue;
Pine Lodge Road, the east side, from E. Hamilton Avenue to Southwind Drive;
Seventh Avenue, west side, from Lake Street to Hudson Street. (Ord. 7120, 2015; Ord. 6635, 2005; Ord. 6548, 2004; Ord. 6518, 2004; Ord. 6346, 2002; Ord. 6301, 2002; Ord. 5648 §3, 1996; Ord. 5469, 1995; Ord. 4497 §4, 1984).

No Parking, Stopping or Standing - 7:30 a.m. to 3:30 p.m., During School Days, Except School Buses. When signs or parking meters are erected in any block giving notice thereof, no person shall park, stop or leave standing any vehicle, except school buses, during the days that the schools of the Eau Claire Area School District are in session, between the hours of 7:30 a.m. and 3:30 p.m., upon the following streets or portions of streets:

Keith Street, east side, from Lloyd Avenue to 50 feet south of Rist Avenue. (Ord. 5110 §6, 1990; Ord. §4497, 1984).

No Parking, Stopping or Standing - 7:30 a.m. to 4:00 p.m., During School Days, Except School Buses. When signs or parking meters are erected in any block giving notice thereof, no person shall park, stop or leave standing any vehicle, except school buses, during the days that the schools of the Eau Claire Area School District are in session, between the hours of 7:30 a.m. and 4:00 p.m., upon the following streets or portions of streets:

Barland Street, north side, from McGraw Street to 125 feet east of McGraw Street;
Eighth Street, the west side from 265 feet south of Truax Boulevard to 445 feet south of Truax Boulevard;
Eisenhower Street, the west side, from 120 feet south of Fillmore Avenue to 220 feet south of Fillmore Avenue;
Keith Street, north side, from Benton Avenue to 80 feet north of Benton Avenue;
Lee Street, the west side, from 417 feet north of Harding Avenue to 362 feet south of Hoover Avenue;
Locust Lane, the east side, from Potter Road to 185 feet south of Potter Road;
Locust Lane, the west side, from Pinehurst Road to Potter Road;
Maxon Street, south side, from Babcock Street to 75 feet west of Babcock Street;
Mercury Avenue, the west side, from 130 feet north of Marquette Street to 85 feet south of Piedmont Road;
Sherwin Avenue, the south side, from Margaret Street to Agnes Street;
Starr Avenue, west side, from 70 feet north of Eddy Lane to 230 feet north of Eddy Lane;
(Ord. 7120, 2015; Ord. 7103, 2014; Ord. 6429, 2003; Ord. 6356, 2002; Ord. 6348, 2002; Ord. 5803, 1998; Ord. 5708 §2, 1997; Ord. 5642 §2, 1996; Ord. 5172 §3, 1991; Ord. 5034 §2, 1989; Ord. 4755 §3, 1987; Ord. 4723 §4, 1987; Ord. 4683 §3, 1986; Ord. 4671 §4, 1986; Ord. 4540 §1, 1985; Ord. 4528 §1, 1985; Ord. 4497 §5, 1984).

Electric Vehicle Charging Hub. When signs are erected identifying an Electric Vehicle Charging Hub giving notice thereof, a person shall not stop, stand, or park anything other than an electric vehicle in such a designated space unless actively engaged in the recharging process. The owner of any vehicle in

violation thereof is subject to additional fees, a forfeiture for a violation and removal of the vehicle at the owner's sole expense. (Ord. 7486 §1, 2022; Ord. 7398 §1, 2020)

Unregistered motor vehicles prohibited. * An unregistered motor vehicle shall not be stopped or parked upon any highway. The owner of any such vehicle is subject to a forfeiture for a violation or removal of the vehicle at the owner's sole expense, or both. (Ord. 7398 §1, 2020)

*This provision is adopted as provided by ch. 341.65, Wis. Stats.

TABLE XV

DISPOSITION OF ORDINANCES

Ordinance Number

3071 Amends prior code 4.46,garbage (Not codified)
3072 Amends prior code 17.03, traffic (Table II)
3078 Amends prior code 17.02, speed limits (Table I)
3079 Setback (18.20)
3089 Railroads obstructing streets (10.32)
3093 Amends prior code 21.17G, rear yards (18.28)
3094 Amends prior code 21.17F, side yards (18.28)
3096 Amends prior code 17.02, speed limits (Table I)
3097 Amends prior code 17.03, stop intersections (Table III)
3098 Amends prior code 17.04, parking (Table VIII)
3099 Amends prior code 17.04, parking (Table X)
3100 Amends prior code 17.04(e), parking (Table X)
3101 Amends prior code 17.05, parking meters (Table IX)
3108 Amends prior code Ch. XV, subsection 8, mobile homes (Repealed by 3246)
3110 Amends 3097, stop intersections (Table III)
3111 Traffic code (10.16)
3113 Snowmobile regulations (9.76)
3114 Amends prior code 18.07B(2)(d), subdivisions (17.24)
3115 Junk cars on private property (8.36)
3116 Housing code (16.08)
3120 Amends prior code 21.17J, parking space zoned; repeals prior code 21.17, 21.17(a) (18.28)
3121 Repeals and recreates prior code 21.17J.9, zoning (18.28)
3122 Amends prior code 21.08C, side yards (18.52)
3123 Amends prior code Ch. XIII, subchapter (3), cemeteries (2.84)
3131 Amends prior code 15.83, mobile homes (Repealed by 3246)
3134 Amends prior code 16.08, liquor licenses (5.30)
3135 Amends prior code 16.07, liquor licenses (5.30)
3136 Amends prior code 16.52, liquor licenses (5.28)
3138 Amends prior code 9.05(e), building permits (Repealed by 3398)
3139 Heating code (16.28)
3140 Amends prior code 8.08, water and sewer rates (Repealed by 4173)
3141 Amends prior code 10.07(d), electrical code permit fee (16.24)
3147 Amends prior code 15.76, mobile homes (Repealed by 3246)
3149 Amends prior code 13.05, loitering on beach (9.76)
3150 Fallout shelters (16.04)
3151 Amends prior code 21.04A, zoning maps (18.28)
3155 Buoys (9.24)
3156 Amends prior code 17.04(e), parking (Table X)
3157 Amends prior code 5.01, intoxicating liquors (Repealed by 3300)
3158 Amends prior code 1101.45, housing code (16.08)
3159 Assemblies (9.60)
3162 Amends prior code 17.04(a), parking (Table VIII)
3166 Amends prior code 17.04(2), parking (Table VIII)
3167 Airport (11.04)
3169 Amends Ord. 3159, assemblies (Not codified)
3174 Amends prior code 17.03A, through streets (Table II)

3178 Amends Ord. 3159, assemblies (9.60)
3179 Waterworks (Title 14)
3180 Amends prior code 17.04(d), parking (Table X)
3181 Amends prior code 15.160(a), subchapter 16, Ch. XV, community TV, repeals para. 3 (Repealed by 3578)
3182 Airport (11.08)
3183 Amends prior code 1.02, council meetings (2.08)
3191 Amends prior code 17.03, through streets (Table II)
3192 Amends prior code 17.04(a), parking (Table VIII)
3194 Amends prior code 17.04(e), parking (Table X)
3200 Repeals prior code 1.06 (Repealer)
3201 Zone created (18.40)
3202 Amends prior code 5.15, sidewalks (13.04)
3203 Amends prior code 12.031, horses (18.32)
3204 Repeals prior code 1.19(B) (2.12)
3208 Zones (Repealed by 3632)
3215 Amends prior code 7.04, water connections, repeals prior code 7.04 (14.08)
3217 Floodplain zones and construction standards (Repealed by 3768)
3218 Sign code (16.16)
3219 Amends prior code 21.105-C-1A, K-3, zones (Repealed by 3632)
3222 Amends prior code 17.04(c), stopping at railroad crossings (Table IV)
3223 Amends prior code 17.03(a), through streets (Table II)
3231 Amends prior code 17.03(b), stop intersections (Table III)
3234 Amends prior code 17.13, adds 17.05(3), continual violations (10.20)
3235 Repeals and reenacts prior code 17.04(d), parking (Tables IX, X)
3237 Amends prior code 17.02(c)(2), para. 1, speed limits (Not codified)
3242 Amends Ord. 3079, setbacks (18.20)
3243 Zoning (18.28)
3244 Amends prior code 17.04(a), parking (Table VIII)
3246 Mobile home zones, repeals prior code Ch. XV, subchapter (8) (16.12)
3247 Amends prior code 21.03 and 21.04, mobile home zone (18.08, 18.28, 18.36)
3248 Pedestrians (Repealed by 3553)
3251 Amends prior code 1.02, city council rules (2.08)
3253 Amends prior code 4.47, garbage dump sites (Repealed by 3866)
3255 Amends prior code 13.072, snowmobiles (9.76)
3255 Amends prior code 5.01, intoxicating liquor (5.48) (misnumbered)
3256 Amends prior code 17.04, parking (Repealer)
3261 Amends prior code 21.04, adds planned community developments (18.92)
3264 Grand Avenue Bridge (Repealed by 4236)
3266 Amends prior code 17.01, snowmobiles (Repealed by 3313)
3268 Amends prior code 17.04(a), parking (Table VIII)
3270 Setbacks (18.20)
3273 Repeals prior code 14.04 (Repealer)
3278 Amends prior code Ch. XVI, subchapters 1 and 2, liquor (5.30)
3279 Amends prior code 17.04, parking (Table VIII)
3280 Amends prior code 17.04(c), parking (Repealed by 3289)
3281 Amends prior code 21.17F, side yards (Repeals former code in part) (18.28)
3282 Amends prior code 21.17G, side yards (Repeals "G") (18.28)
3283 Amends prior code 17.05(2)(e), adds parking (10.20)
3284 Building construction standards (16.04)
3287 Amends prior code 17.04(a), parking (Table VIII)
3288 Amends prior code 17.04(a), parking (Table VIII)
3289 Amends prior code 17.04(e), parking, repeals 3280 (Table X)
3290 Amends prior code 17.03(a), through streets (Table II)
3291 Amends prior code 17.03(b), stop intersections (Table III)
3292 Amends prior code 17.04(b), parking (Table IX)
3296 Amends prior code 17.033, left turns (Table VI)
3300 Amends prior code 5.01, intoxicating liquors, repeals 3157 (9.52)
3302 Amends prior code 17.03(a), through streets (Tables II, III)
3303 Amends prior code 1.03(III)(a), clerk (2.16)
3304 Amends 1001.09(a) of building code, building code committee (16.04)
3310 Amends prior code 1.22B, airport commissioner (2.52)
3311 Amends prior code 5.15(b), sidewalks, repeals prior code 5.15(b) (13.04)

3313 Traffic code, repeals prior code 17.01 (Title 10)
3314 Amends prior code 17.08, bicycles, repeals 17.08 (a), (b), (d), (e), (f), (g), (h) (10.08)
3316 Amends 17.03(1), (2), through streets, stops (Tables II, III)
3317 Amends prior code 17.07(1), parking (Table VIII)
3320 Amends zoning ordinance, setback (18.20)
3323 Amends prior code 17.07(1), parking (Table VIII)
3324 Amends prior code 17.08(1), one-way traffic (10.40)
3325 (Missing)
3326 (Missing)
3327 Amends prior code 13.25, cemetery rules (2.84)
3328 Amends prior code 17.07(1), parking (Table VIII)
3329 Amends prior code 17.07(1), parking (Table VIII)
3330 Parking (Table VIII)
3331 (Missing)
3332 Garbage collector license (Repealed by 3866)
3336 Public parks (9.76)
3340 Traffic parking (10.24)
3341 Excavating streets (Repealed by 4173)
3345 Amends §10.09(a) and repeals §10.09(b), (c), (d),(i) and (j), electrical code (16.24)
3346 Amends §4.46(b)(3), garbage disposal (Repealed by 3866)
3347 Amends §17.03(1), (2), traffic (Tables II, III)
3348 Amends §17.03(1), (2), traffic (Tables II, III)
3356 Amends §17.02(2)(a), speed limits (Table I)
3363 Amends §17.07(1), parking (Table VIII)
3367 Amends §17.03(2) and 17.07(7) and adds §17.07(5m), (6m), traffic (Table III)
3368 Amends §17.07(1) and (5m), parking (Not codified)
3369 Amends §17.07(1), parking (Table VIII)
3370 Amends §§17.03(2) and 17.07(1), traffic (Tables III, VIII)
3372 Adds §21.105, conservancy districts (Repealed by 4248)
3373 Adds §23.23, special assessments (3.16)
3376 Amends §§17.07(12)(b), (12)(d), (12)(i), (12)(k) and 17.21(4), parking (10.20)
3377 Adds (12)(a) to §17.07, parking (Repealed by 4243)
3379 Amends §§4.46(b)(1), (b)(5), 4.48(c) and (3), garbage (Repealed by 3866)
3382 Amends §1111.06 of Housing Maintenance and Occupancy Code, operating license (16.08)
3388 Adds §1.23, parks and recreation (2.64)
3389 Amends §10.03(b) and (c), electrical code (16.24)
3391 Amends §§15.95 and 15.96, auctions (5.04)
3392 Amends §12.01(a), (b), (e), (g), dogs (6.04)
3394 Amends §17.07(1), (7), parking (Tables VIII, X)
3395 Amends §§7.02 I, 7.03(h), (i), 7.08(a), 7.15, 7.16, 7.19, 7.20(2) a, b, 7.21(a), (b), waterworks (Title 14)
3396 General provisions (1.04, 1.16)
3398 Repeals and recreates §§23.10 and 23.21, repeals §§1.03 IX, IXA, X; 4.432; 4.75; 4.94; 5.20(13); 5.24; 1005.02; 1512; 10.12; 12.12 2(g); 13.19; 13.21(13); 14.86; 15.86(a); 15.144; 15.174; 16.04; 16.10; 16.22; 16.26--16.29; 17.20; 18.12; 21.111; 21.24; 22.15; 23.11; 23.24E; 23.50 III, II; and Ord. 3138 (3.16)
3399 Amends §24.10, bulkhead lines (9.24)
3400 Amends §17.02(2)(a), speed limits (Table I)
3401 Amends §17.03(2), stop intersections (Table III)
3402 Adds §1.27, transit commission (2.60)
3403 Amends §1.10(3), election officials (2.20)
3404 Amends §17.07(1), parking (Table VIII)
3405 Amends §17.07(1), parking (Table VIII)
3406 Amends §17.07(1), parking (Table VIII)
3407 Amends §17.033, left turns (Table VI)
3411 Amends §17.03(2), stop intersections (Table III)
3415 Amends §17.07(1), parking (Table VIII)
3423 Creates §1.30, receipt of gifts and gratuities (2.72)
3424 Amends §21.17(I)(3), screening and fencing; creates §21.17(K), screening; repeals §21.11(C)(4) and (5) (18.28)
3425 Repeals and recreates §8.085, street opening repairs (Repealed by 4173)
3427 Amends §17.03(2), stop intersections (Table III)
3431 Amends §17.03(2), stop intersections (Table III)

3432 Amends §17.07(1); creates 17.07(10m), parking (Table VI)
3444 Amends §17.07(1), parking (Table VII)
3445 Amends §17.07(1), parking (Table VII)
3446 Amends §17.03(2), stop intersections (Table III)
3447 Amends §17.07(2), parking (10.24)
3452 Amends §17.02(2)(a) and (b), speed limits (Table I)
3454 Amends §1505, 1505.4, and 1505.5, heating code; repeals the last paragraph of §1507.411 (5.22)
3458 Code adoption (1.01)
3460 Amends Table VIII, parking (Table VIII)
3461 Amends Table VII, parking (Table VII)
3462 Amends §§6.20.010 and 6.20.040, squirrels (6.20)
3463 Amends Table II, through streets, and Table III, stop intersections (Tables II and III)
3465 Amends Table III, stop intersections (Table III)
3466 Amends §9.76.040(C), speed limits (9.76)
3467 Amends §2.20.030, officials' compensation (2.20)
3468 Amends Table I, speed limits (Table I)
3469 Amends Table VI, left turns (Table VI)
3470 Amends Table VII, parking (Table VII)
3471 Amends Table VIII, parking (Table VIII)
3472 Amends §18.84.020, permitted uses (Repealed by 3632)
3473 Amends prior code §17.08(k) as renumbered by Ord. 3313 §XXII to §17.10(k), bicycles (10.08)
3474 Repeals §9.52.010, public intoxication (Repealer)
3475 Amends §16.04.610, building code (16.04)
3480 Amends §8.16.020(A), restaurant licenses (8.16)
3481 Landmarks commission (2.65)
3484 Amends E, F and I, repeals and recreates A and B of §18.28.150, off-street parking (18.28)
3491 Amends Table VII, parking (Table VII)
3492 Amends §18.92.050, zoning (18.92)
3493 Amends Table I, speed limits (Table I)
3494 Amends Table III, stop intersections (Table III)
3496 Amends Table II, through streets, and Table III, stop intersections (Tables II and III)
3500 Amends prior code §1003.01 as amended by Ord. 3475, building code (16.04)
3501 Repeals and recreates Ch. 18.60, zoning (18.60)
3502 Amends Table III, stop intersections (Table III)
3503 Amends Table II, through streets and Table III, stop intersections (Tables II and III)
3504 Amends Table II, through streets and Table III, stop intersections (Tables II and III)
3505 Amends Table VII, parking prohibited and Table VIII, parking during specified hours (Tables VII and VIII)
3506 Amends Table VII, parking prohibited (Table VII)
3508 Amends §17.12.280, sidewalks (17.12)
3510 Amends §10.40.055, school parking lots, repeals and recreates portion of Table I, speed limits (10.40, Table I)
3511 Amends §10.20.080, repeals and recreates §10.20.100, Parking meters and lots (10.20)
3512 Suspends Ord. 3480 and §8.16.020, restaurant license (Not codified)
3513 Creates Ch. 3.20, room tax (3.20)
3515 Repeals Ch. 3.04, claims against city (Repealer)
3516 Amends §5.52.020, tree trimmer license (5.52)
3517 Amends subsection B of §2.84.160, grave fees and charges (2.84)
3518 Adds Ch. 9.38, smoking (Repealed by 3579)
3519 Amends Table I, speed limits (Table I)
3523 Adopts §346.37(1)(C)(3) of Wisconsin Statutes, (10.04)
3526 Amends Table VII, parking prohibited (Table VII)
3527 Amends Table VIII, parking during specified hours (Table VIII)
3530 Amends Table VIII, parking during specified hours (Table VIII)
3531 Amends Table VII, parking prohibited (Table VII)
3532 Amends subsections (J) of §16.08.070 and (A), (I), and (J) of §16.08.120 and (A) of §16.08.160; adds §§16.08.070(K), 16.08.075 and 16.08.090(I); repeals and recreates subsections (F) of §16.08.120 and (B) of §16.08.160; repeals §16.08.120(B), housing code (16.08)
3533 Amends Table VII, parking prohibited (Table VII)
3534 Amends second sentence of subsection C of Ch. 3.20 (§3.20.030), gives effective date for subsections K and L of Ch. 3.20 (§§3.20.110, 3.20.120) (3.20)
3535 Amends Table III, stop intersections (Table III)

3539 Amends §5.04.040, auctions (5.04)
3542 Amends §5.30.070(A), limits number of intoxicating liquor licenses (5.30)
3543 Amends §18.60.090, zoning procedure and site plan (18.60)
3544 Amends Table I, speed limits (Table I)
3545 Amends Table I, speed limits (Table I)
3546 Amends Table VII, parking prohibited (Table VII)
3549 Amends Table I, speed limits (Table I)
3550 Adds (F) to §10.20.080, off-street parking lot monthly charge (10.20)
3551 Amends §18.08.200, family defined for zoning (18.08)
3552 Adds §9.78.010 and Ch. 9.78, obtaining utility service by fraud (9.78)
3553 Repeals Ch. 10.28, pedestrian crossings (Repealer)
3554 Amends Table VII, parking prohibited (Table VII)
3556 Amends Table I, speed limits (Table I)
3557 Amends Table II, through streets, and Table III, stop intersections (Tables II, III)
3558 Adds §5.02.045, qualified person required on amusement device premises (5.02)
3559 Amends §8.32.090, trash and garbage collection times (Repealed by 3866)
3560 Adds §§5.56.010--5.56.120 and Ch. 5.56, massage establishments, massage technicians and the practice of massage (5.56)
3565 Amends Table III, stop intersections (Table III)
3570 Amends Table III, stop intersections (Table III)
3571 Amends Table VII, parking prohibited (Table VII)
3573 Adds (W) to §16.16.020 and amends §16.16.105, election campaign signs (16.16)
3574 Creates Title 15, sewers and sewerage, and Ch. 15.04, sewer service charge (15.04)
3576 Amends §10.20.100, transient charges at unmetered parking lots and ramps (10.20)
3577 Amends Table VII, parking prohibited and Table VIII, parking during specified hours (Tables VII, VIII)
3578 Cable television ordinance, repeals Ch. 5.50 and Ord. 2880 (4.04)
3579 Repeals and recreates Ch. 9.38 and §§9.38.010 and 9.38.020, smoking prohibited (9.38)
3580 Adds Ch. 2.66 and §§2.66.010--2.66.040, cable television advisory committee (2.66)
3583 Amends §16.16.210, overhead banners (16.16)
3589 Adds Ch. 9.43 and §§9.43.010--9.43.040, exposing minors to harmful materials, repeals prior code §§20.13, 20.14 and 20.15 (9.43)
3590 Repeals Ch. 10.30, right turns prohibited at signalized intersections (Repealer)
3591 Amends Table VIII, parking during specified hours (Table VIII)
3592 Amends Table VIII, parking during specified hours (Table VIII)
3593 Amends Table VII, parking prohibited (Table VII)
3596 Amends §8.28.030, objectionable weeds (8.28)
3597 Adds (C) to §9.38.010, prohibiting smoking in public bus shelters (9.38)
3598 Amends Table II, through streets, and Table III, stop intersections (Tables II, III)
3599 Amends §13.20.010(A), cleaning of snow and ice required (13.20)
3608 Adds (G) and amends (F) of §15.04.030, sewer service charges (15.04)
3609 Amends Table I, speed limits (Table I)
3610 Adds material to §9.24.160, bulkhead lines (9.24)
3614 Adds Ch. 5.37, charitable solicitation (5.37)
3615 Adds §5.10.155, dances and 5.26.080, cabaret license (5.10, 5.26)
3618 Adds §9.24.180, placement of buoys and markers on Chippewa River (9.24)
3621 Adds §8.16.015, suspends (A) of §8.16.020, restaurant review board (8.16)
3622 Adds Ch. 9.88, emergency powers (9.88)
3623 Deletes street from Table VI, left turns prohibited (Table VI)
3626 Amends §2.04.010, council salaries (2.04)
3627 Amends Table VIII, parking during specified hours (Table VIII)
3628 Amends Table VII, parking prohibited (Table VII)
3629 Amends Table VIII, parking during specified hours (Table VIII)
3632 Adds §§18.08.045, 18.08.115, 18.08.125, 18.08.185, 18.08.186, 18.08.195, 18.08.235, 18.08.405, 18.08.415 and Ch. 18.31; repeals and replaces §18.28.050, (A) of §18.28.150, and Chs. 18.32, 18.44, 18.48, 18.52, 18.56, 18.64, 18.68, 18.70, 18.74, 18.80, 18.84 and 18.88; repeals Ch. 18.78, zoning (Title 18)
3633 Repeals §5.42.060 (Repealer)
3634 Amends §§9.16.010(B), 9.16.020 and 9.16.030(A)(1)--(A)(4), fair housing (9.16)
3635 Adds §2.48.020, board of review sessions (2.48)
3636 Amends §16.20.080, street opening fees (Repealed by 4173)
3637 Adds (H) to §15.04.030, sewerage service charge (15.04)
3639 Amends (A) of §13.16.010, litter on streets (13.16)
3641 Adds §14.04.090, water sprinkling ban (14.04)

3642 Amends Table VIII, parking during specified hours (Table VIII)
3643 Amends (F) of §9.24.180, placement of buoys and markers on Chippewa River (9.24)
3645 Adds (L) to §5.28.080 and (H) to §5.30.160, intoxicating beverages (5.28, 5.30)
3648 Amends Table VII, parking prohibited (Table VII)
3649 Amends Table VIII, parking during specified hours (Table VIII)
3651 Adds §10.40.160, motor-driven cycles and all-terrain vehicles (10.40)
3652 Amends Table VII, parking prohibited (Table VII)
3653 Adds §16.08.165 and certain definitions to §16.08.060, housing (16.08)
3654 Adds §8.28.100 and changes name of Ch. 8.28, weeds, yards and lawns (8.28)
3655 Adds §18.28.155, zoning (18.28)
3657 Adds language to (E) of §10.20.080, parking meters (10.20)
3660 Adds language to (A) of §18.28.150, zoning (18.28)
3666 Amends Tables II and III, through streets and stop intersections (Tables II, III)
3667 Amends Table VII, parking prohibited (Table VII)
3668 Amends Table VIII, parking during specified hours (Table VIII)
3670 Adds subsections I and J of §15.04.030, sewage service charges (15.04)
3673 Amends subsection B of §18.68.025, zoning (18.68)
3677 Amends subsection H of §16.12.040, mobile homes (16.12)
3678 Creates Ch. 9.50, carrying containers and throwing objects within spectator facilities (9.50)
3681 Adds subsections J--K to §16.04.400, subsection H to §16.04.420, subsections A(3), A(4) and B(4) to §16.04.450, subsections E, F and G to §16.04.460, subsections G(3) and (7) to §16.04.510, subsections F, G and H to §16.04.600, Section 16.04.605 and subtitle VII immediately previous to §6.04.610; amends subsection B of §16.04.050, subsections A and B of §16.04.080, subsections A and C of §16.04.090, subsection D of §16.04.220, §16.04.250,subsection D(1) of §16.04.260, §16.04.380, subsections D, G and I of §16.04.400, subsection E(2) of §16.04.420, subsection B(2) of §16.04.450, subsection A of §16.04.510, subsection E of §16.04.540, and subsections C and G of 16.04.590; renumbers subsections A--H of §16.04.400 to be B--I and adds new §16.04.400(A), creates new introductory language and repeals and recreates subsection A and B of §16.04.420, repeals and recreates subsection N of §16.40.440, subsection A(1) of §16.04.450, subsection E(2) of §16.04.510, subsection C of §16.04.540, subsections D, M, P and Q of §16.04.570, and the titles only of §§16.04.600 and 16.04.610, building code (16.04)
3683 Amends §2.66.020, cable television advisory committee (2.66)
3684 Amends §9.52.030, public intoxication (9.52)
3685 Amends §8.32.100, garbage disposal charges (Repealed by 3866)
3686 Amends Table VII, parking prohibited (Table VII)
3687 Amends Table VIII, parking during specified hours (Table VIII)
3688 Amends Table III, stop intersections (Table III)
3690 Amends Table III, stop intersections (Table III)
3691 Amends §§5.34.020 and 5.34.030, hawkers and peddler's license (5.34)
3693 Amends subsection A of §18.64.020, zoning (18.64)
3694 Amends subsection A of §15.04.030 and subsection E of §15.04.030, sewerage service charges (15.04)
3695 Amends Table VIII, parking during specified hours (Table VIII)
3697 Amends subsection J of §18.60.030, zoning (18.60)
3698 Repeals and recreates subsection I of §16.16.220, signs (16.16)
3699 Amends §2.08.010, city council meetings (2.08)
3702 Amends Table VII, parking prohibited (Table VII)
3707 Amends Table III, stop intersections (Table III)
3708 Amends Table III, stop intersections (Table III)
3710 Amends Table VII, parking prohibited (Table VII)
3711 Amends subsection D of §16.16.180 and subsection C of §16.16.210, signs (16.16)
3713 Amends §2.08.010, city council meetings (2.08)
3722 Adds subsection E to §18.56.020, zoning (18.56)
3723 Adds subsections 30 and 31 to §18.74.030 and amends §18.74.050, subsection C of §18.28.100, subsection E of §18.28.150, and subsection C(6) of §18.28.155, zoning (18.28, 18.74)
3726 Adds items to Table III, stop intersections (Table III)
3727 Repeals and reenacts §10.12.020, traffic control (10.12)
3730 Amends §9.76.120, parks and public grounds (9.76)
3731 Adds items to Table VII, parking prohibitions (Table VII)
3732 Adds item to Table VII, parking prohibitions (Table VII)
3733 Adds §5.26.090 and new subsections G, H and M to §5.26.070; repeals and replaces subsection F of §5.26.070; and reletters prior subsections G, I, J, and K of §5.26.070 to I, J, K, and L, respectively, licensing conditions (5.26)

3734 Adds §18.20.110, zoning setbacks (18.20)
3737 Amends fee schedule of §16.20.080, street openings (Repealed by 4173)
3740 Amends subsection B of §18.68.025, zoning (18.68)
3741 Amends §18.24.020, zoning map (Repealed by 4134)
3747 Deletes item from Table VII, parking prohibitions (Table VII)
3753 Adds subsection K to §18.84.025, zoning (18.24)
3754 Adds paragraph to §18.84.020, zoning (18.84)
3755 Adds items to Table VII, parking prohibitions and items to Table VIII, parking restrictions (Tables VII and VIII)
3757 Amends §2.16.020, license taxes (2.16)
3758 Adds item to Table I, speed limits (Table I)
3760 Amends subsection C of §18.28.140, zoning (18.28)
3761 Repeals and reenacts subsection B of §16.20.070, plumbing permit fees (Repealed by 4173) 3768 Repeals and reenacts Ch. 18.94, floodplains; repeals §§16.04.105 and 16.04.200 (18.94)
3769 Amends §9.76.165, intoxicating beverages in parks (9.76)
3773 Repeals and reenacts Ch. 8.20, trees; adds §17.12.125; repeals Ch. 8.24 (8.20, 17.12)
3778 Adds Chs. 2.54 and 2.70; repeals and reenacts §2.04.040; amends §§2.04.030, 2.08.150, 2.24.010, 2.24.020, and subsection A of §2.12.020; repeals §§2.24.150, 2.24.160 and 2.72.060--2.72.120; changes title of Ch. 2.24; and makes substitutions of terms in §§2.24.090, 2.24.130, 2.24.140, subsection A of §2.84.060, and subsection G of §15.04.030, administration and personnel (2.04, 2.08, 2.12, 2.24, 2.54, 2.70, 2.72, 2.84 charter ordinance)
3779 Adds items to Tables II, III, VII, and VIII, street and parking restrictions (Tables II, III, VII, VIII) 3780 Amends subsection B of §16.20.070, plumbing permit fees (Repealed by 4173)
3784 Amends §§8.32.020 and 8.32.060, garbage disposal (Repealed by 3866)
3786 Amends §18.52.020, permitted uses (18.52)
3790 Adds to Table III, stop intersections (Table III)
3793 Adds §§14.08.150, 14.12.080 and 14.20.135, amends §§14.20.050, 14.20.060(A) and (B), 14.20.080, 14.20.090(B), 14.20.100(B) and 14.20.130(D); repeals and recreates §§14.08.040, 14.20.020, 14.20.040, 14.20.110, 14.20.120, 14.20.130(E) and (F), and 14.20.140(D); repeals §14.20.140(E), waterworks (14.08, 14.12, 14.20)
3794 Adds Ch. 1.24, citations for ordinance violations (Repealed by 4220)
3795 Adds to Tables I, III, V and VII; repeals from Table III, traffic (Tables I, III, V, VII)
3796 Adds §10.24.020, parking for handicapped persons (10.24)
3797 Amends §15.04.030(D), (E) and (J); repeals and recreates §15.04.030(A); repeals §15.04.030(C), sewer charge established (15.04)
3800 Repeals §18.28.070, conversion of dwellings (Repealer)
3801 Adds to Tables II and III, traffic (Tables II, III)
3802 Adds to Table VII, parking prohibited (Table VII)
3803 Amends §9.64.030, spite fences (9.64)
3813 Adds to Table I, speed limits (Table I)
3814 Adds to Table VII, parking prohibited (Table VII)
3815 Repeals Ord. 3795 §5, one-way streets (Repealer)
3816 Amends §§5.18.020 and 5.18.070, garbage collector license (5.18)
3817 Adds to Tables III and VII, traffic (Tables III, VII)
3820 Adds to Tables III and VII, traffic (Tables III, VII)
3826 Adds §§18.08.445, 18.08.535, 18.70.020(62) and 18.70.025(H); amends §§18.08.045, 18.28.150(A), 18.68.020(H), 18.70.020(60) and 18.74.020(13), zoning (18.08, 18.28, 18.68, 18.70, 18.74)
3827 Amends §6.20.010, squirrels (6.20)
3830 Repeals and recreates §4.04.120(D)(3), cable television (4.04)
3831 Repeals and recreates §15.04.030(A), sewers (15.04)
3836 Adds to Tables VII and VIII, traffic (Tables VII, VIII)
3837 Amends §5.18.020 and 5.18.070, garbage collector license (Repealed by 3866)
3842 Renumbers subsection (D) as (F), and adds new subsections (D) and (E) to §16.28.020;renumbers Article II, gas installations, as Article III, gas and oil installations, and adds new Article II; amends §§16.28.010(F) and (G), and §16.28.110(A), heating code (16.28)
3843 Amends §16.04.090(C), building permit fees (16.04)
3844 Amends §18.04.060, zoning amendments (18.04)
3847 Amends Tables VII, parking prohibited, and VIII, parking during specified hours (Tables VII, VIII) 3848 Amends subsection A of §18.98.030, zoning (18.98)
3849 Adds Ch. 9.10, private alarm systems (9.10)
3850 Amends subsection B of §16.28.110, heating installation permit fees (16.28)
3851 Amends Tables III, stop intersections, and V, one-way streets (Tables III, V)
3852 Amends Tables VII, parking prohibited, and VIII, parking during specified hours (Tables VII, VIII)

3854 Repeals and recreates subsection C of §18.64.020, renumbers first paragraph of §18.64.030 as A and adds subsection B, zoning (18.64)
3862 Amends Table VIII, parking during specified hours (Table VIII)
3864 Repeals and replaces subsection B of §6.08.010; adds §§6.04.005, 6.08.060 and 6.08.070, and Chs. 6.10 and 6.11; amends §§6.04.010, 6.04.020, subsection C of 6.08.010, 6.08.020 and 6.08.030, animals (6.04, 6.08, 6.10, 6.11)
3866 Repeals and recreates Ch. 8.32, refuse collection and disposal; repeals Ch. 5.18 (8.32)
3868 Amends Table I, speed limits (Table I)
3869 Amends subsection A of §8.16.020, restaurant license application (8.16)
3870 Amends §10.24.020, handicapped persons parking, and Tables VII, parking prohibited, and VIII, parking during specified hours (10.24, Tables VII, VIII)
3872 Amends §16.20.080, street opening fees (Repealed by 4173)
3875 Amends §2.04.010, city council (2.04 charter ordinance)
3876 Amends subsections A and B of §5.28.040, fermented malt beverage licenses (5.28)
3877 Repeals and recreates §14.16.010, adds §14.16.050, water service; repeals §14.16.020 (14.16)
3878 Repeals and recreates subsection A, and amends title, of §10.04.050, traffic (10.04)
3880 Adds §§18.40.025, subsections G to 18.44.025, C to 18.64.030, C to 18.68.025, E to 18.74.025 and L to 18.84.025; amends subsection A of §18.88.020; zoning (18.40, 18.44, 18.64, 18.68, 18.74, 18.84, 18.88)
3882 Amends Tables VII, parking prohibited, and VIII, parking during specified hours (Tables VII, VIII)
3883 Amends Table III, stop intersection (Table III)
3887 Amends subsection C of §8.32.160 and §8.32.180, refuse collection (8.32)
3892 Amends Table VII, parking prohibited (Table VII)
3985 Amends Tables VII, parking prohibited, and VIII, parking during specified hours (Tables VII, VIII)
3986 Amends subsection D of §8.32.170, refuse collection (8.32)
3901 Amends Tables III, stop intersections, and VII, parking prohibited (Tables III, VII)
3902 Amends Table VIII, parking during specified hours (Table VIII)
3905 Adds Ch. 18.93, zoning (18.93)
3906 Adds §18.08.443, and subsections L to §18.52.020 and F to §18.56.020, zoning (18.08, 18.52, 18.56)
3908 Amends §8.32.140 and §3 of Ord. 3866, dumping privileges (8.32)
3909 Amends Table VII, parking prohibited (Table VII)
3912 Temporary ordinance amends Table IX, parking meter locations; repeals items in Table IX, parking meter locations; repeals subsections B and I of §10.24.010, parking prohibited in certain places (Not codified)
3913 Adds Ch. 10.30, right turns; amends §10.04.020, right turns (10.04, 10.30)
3914 Adds items (3) and (4) to subsection B of §10.24.020, handicapped person's parking; adds to Table VII, parking prohibited (10.24, Table VII)
3918 Amends subsection A of §14.20.010, water bills and notices (14.20)
3919 Adds item (4) to subsection B of §1.24.040, citation issuance (1.24)
3920 Adds item to Table I, speed limits (Table I)
3921 Adds item to Table III, stop intersections (Table III)
3924 Adds items to Table VII, parking prohibited (Table VII)
3925 Adds item to Table VII, parking prohibited (Table VII)
3928 Adds §§18.08.402, adds subsections F to 18.32.015 and H to 18.44.025; amends §18.40.025, zoning (18.08, 18.32, 18.40, 18.44)
3929 Adds item (5) to subsection B of §10.24.020, handicapped person's parking (10.24)
3930 Adds item to Table VII, parking prohibited, adds paragraph to Table VIII, parking during specified hours (Tables VII, VIII)
3931 Adds item to Table VII, parking prohibited, adds paragraph to Table VIII, parking during specified hours (Tables VII, VIII)
3932 Adds items to and deletes item from Table III, stop intersections (Table III)
3933 Amends subsection C of §18.28.100, zoning (18.28)
3936 Adds items to §1.24.030, citations; amends subsection A of §13.16.010, litter (1.24, 13.16)
3937 Adds §16.04.005, building codes (Repealed by 4081)
3938 Amends subsection A of §16.16.220, signs (16.16)
3940 Adds items to Table VII, parking prohibited; repeals item in Table VIII, parking during specified hours (Tables VII, VIII)
3941 Adds §18.08.425 and subsection H to 18.28.060; amends subsection G of §18.28.060, zoning (18.08, 18.28)
3942 Adds subsection M to §18.84.025, zoning (18.84)
3944 Repeals and recreates §§9.56.010 and 9.56.070, public peace offenses (9.56)
3945 Amends §10.20.100, unmetered parking rates (10.20)

3946 Adds items to Table VIII, parking during specified hours (Table VIII)
3947 Amends §8.32.110; repeals and recreates §8.32.130, refuse collection and disposal (8.32)
3948 Amends §8.32.180; refuse collection and disposal (8.32)
3949 Repeals portion of Ord. 3938, signs (16.16)
3950 Adds §18.08.135; amends §18.68.025, zoning (18.08, 18.68)
3951 Adds §2.28.150 and item (9) to subsection A of 16.04.090; amends §§2.84.160, 5.02.030, 5.12.040, 5.12.050, 5.14.010, 5.24.040, 5.26.020, 5.26.030, 5.30.030, 5.42.030, 5.46.050, 5.54.080, 8.16.030, subsections E of 5.10.020, F of 16.08.160, A of 16.16.050, A, B and C of 16.24.130 and items (1) and (2) of A of 8.08.070; repeals and recreates §5.44.020, license and permit fees (2.28, 2.84, 5.02, 5.10, 5.12, 5.14, 5.24, 5.26, 5.30, 5.42, 5.44, 5.46, 5.54, 8.08, 16.04, 16.08, 16.16, 16.24)
3952 Adds items to Table VII, parking prohibited and items and new paragraph to Table VIII, parking during specified hours (Tables VII, VIII)
3954 Adds item to Table VII, parking prohibited (Table VII)
3957 Amends Table I, speed limits (Table I)
3958 Adds §2.84.195; amends subsection F of §2.84.110, cemetery regulations (2.84)
3959 Repeals and recreates §14.12.080, water connections (14.12)
3961 Adds items to Tables VII, parking prohibited, VIII, parking during specified hours; repeals item in Table VIII (Tables VII, VIII)
3967 Amends §§8.32.160 C and 8.32.180, refuse collection (8.32)
3968 Amends Tables VII and VIII, parking (Tables VII, VIII)
3970 Amends Table VII, parking (Table VII)
3971 Amends Table VII, parking (Table VII)
3972 Amends Table VII, parking (Table VII)
3973 Amends §8.32.180, refuse collection (8.32)
3974 Amends §3.20.020 and repeals and recreates the preamble of Ord. 3513, room tax (3.20)
3977 Amends §§2.84.160 C and 16.24.130 A and C, license and permit fees (2.84, 16.24)
3978 Amends §10.20.080 E, parking meters (10.20)
3980 Repeals and recreates §§2.36.080 and 2.36.090; repeals §§2.36.100, 2.36.110, 2.36.120 and 2.36.130; and renumbers §2.36.140 as §2.36.100, police department (2.36)
3988 Amends §18.92.110, signs (18.92)
3989 Amends Table VII, parking (Table VII)
3990 Amends Table VII, parking (Table VII)
3991 Amends Table VIII, parking (Table VIII)
3992 Amends §10.30.010, right turns (10.30)
3994 Amends §16.20.080, street opening fees (Repealed by 4173)
3995 Amends §8.32.070 A and B, refuse collection (8.32)
3997 Adds §5.12.020 E, amends §5.12.050; repeals and recreates §5.12.020 D and 16.24.040; and repeals §§16.24.180 and 16.24.210, electricians (5.12, 16.24)
3998 Amends §9.24.130, boating regulations (9.24)
4002 Amends §16.20.070 A, plumbing code (Repealed by 4173)
4005 Adds §4.04.040 F; amends §§4.04.040 D and 4.04.120 D (1); repeals and recreates §§4.04.030 C, 4.04.040 A (4) and 4.04.140; repeals §§4.04.040 A (5), 4.04.080 B (12--18) and 4.04.080 C (7); and renumbers §4.04.040 A (6, 7, 8, 9 as §4.04.040 A (5, 6, 7, 8), cable television (4.04)
4008 Amends §14.16.050, waterworks (14.16)
4010 Adds §18.74.025 F, conditional uses (18.74)
4012 Adds §10.20.110; and amends §10.20.100, parking lots and ramps (10.20)
4013 Adds §9.84.040, 9.84.050, 9.84.060 and 9.84.070; and amends §1.24.040, offenses (1.24, 9.84)
4014 Repeals and replaces paragraph B of Ord. 3998, boating (9.24)
4015 Adds §1.08.015, destruction of obsolete records (1.08)
4016 Adds item 7 to §10.24.020 B, parking; adds item to Table I, speed limits (10.24, Table I)
4023 Adds subsection E to §18.68.025, zoning (18.68)
4024 Adds items to Table II, through streets, and Table III, stop intersections (Tables II, III)
4027 Adds item to Table III, stop intersections (Table III)
4028 Adds items to Table VII, parking prohibited and Table VIII, parking during specified hours (Tables VII, VIII)
4032 Amends §13.32.020, street vacation fee (13.32)
4038 Amends subsections C and D of §5.24.020 and §§5.24.030 and 8.32.020; adds §5.24.075, junk dealers and refuse collection (5.24, 8.32)
4039 Amends introductory paragraph of Table V, one-way streets and alleys (Table V)
4040 Adds items to Table VII, parking prohibited (Table VII)
4042 Amends subsections D and E of §15.04.030; repeals and replaces subsections A and B of §15.04.030 and §15.04.040, sewerage service charge (15.04)
4044 Repeals and replaces §9.76.100; amends §9.76.165; adds §9.76.167, parks (9.76)

4045 Amends §§13.28.040, 13.28.070, 13.28.080, and 13.28.090, house numbering (13.28)
4046 Renumbers §5.12.010 to be §5.12.010A and adds §5.12.010B; repeals and replaces subsections A, B, and C of §5.12.020, electrician's license; repeals and replaces §16.24.100, repeals §16.24.110, amends subsections A and C of §16.24.130, and renumbers §16.24.220 to be §16.24.220A and adds §16.24.220B, electrical code (5.12, 16.24)
4050 Amends and repeals items of Table I, speed limits; adds items to Table II, through streets; amends and adds items to Table III, stop intersections (Tables I, II, III)
4051 Adds Ch. 2.92, city procurement (2.92)
4052 Adds item I to §18.70.025 and item 36 to §18.84.020, zoning (18.70, 18.84)
4055 Amends §18.48.030; renumbers §18.48.050 to be §18.48.050A and adds §18.48.050B, zoning (18.48)
4056 Adds item to Table VII, parking prohibited (Table VII)
4057 Adds items to Table VII, parking prohibited and Table VIII, parking during specified hours (Tables VII, VIII)
4058 Adds §2.36.015, police officers' oath of office (2.36)
4059 Amends §16.20.010, plumbing code (16.20)
4061 Adds §§5, 6 and 7 to Ord. 3912, parking (Table VIII)
4062 Amends item in Table VII, parking prohibited; adds items to Table VIII, parking during specified hours (Tables VII, VIII)
4063 Adds §§9.52.010 and 9.76.220, prohibited acts on school property (9.52, 9.76)
4064 Adds §18.08.047; amends §§16.04.060(176) and 18.08.450; repeals and replaces §16.04.060(16), building code and zoning (16.04, 18.08)
4065 Adds §9.32.030; and amends Ch. 9.32 and §9.32.020, fireworks and firearms (9.32)
4072 Adds §9.84.080; amends §1.24.030A, 6.08.070, 9.24.150, 9.38.020, 9.40.010, 9.56.080, 9.72.030, 9.76.210 and 9.84.020, ordinance violations (1.24, 6.08, 9.24, 9.38, 9.40, 9.56, 9.72, 9.76, 9.84) 4073 Adds to Tables II and III, traffic (Tables II, III)
4074 Adds to Tables VII and VIII, traffic (Tables VII, VIII)
4075 Repeals §§5.28.110, 5.30.160C and 5.30.180 (Repealer)
4077 Amends §16.20.080, street opening fees (Repealed by 4173)
4078 Amends §8.32.180, and replaces §8.32.160C, refuse collection (8.32)
4080 Repeals portion of Table IX, traffic (Repealed by 4243)
4081 Repeals and replaces §16.04.005, Uniform Dwelling Code (16.04)
4083 Amends §18.08.280, zoning (18.08)
4085 Amends §§16.24.130B, 16.24.150B, 16.24.190A, C and D, and 16.24.200, electrical code (16.24)
4086 Adds §16.04.080E, building code; and amends §17.20.020, final plat (16.04, 17.20)
4088 Amends §5.28.130A, fermented malt beverages (5.28)
4089 Adds to Table IX, traffic (Repealed by 4243)
4090 Adds to Table III, traffic (Table III)
4091 Adds §10.20.100C and amends §§10.20.080 E and F, parking (10.20)
4093 Repeals and replaces §10.16.010, bridge restrictions (10.16)
4095 Adds to Tables II and III, traffic (Tables II, III)
4098 Adds to Table I, traffic (Table I)
4099 Renumbers §16.32.050 as §16.32.060 and adds §16.32.050; repeals and replaces §§16.32.010 and 16.32.020, Fire Prevention Code (16.32)
4100 Amends §16.24.150, electrical code (16.24)
4102 Repeals and replaces §2.08.080, council meetings (2.08)
4103 Amends §16.04.090A; repeals and replaces §16.04.005G, permit fees (16.04)
4104 Adds §10.20.080G, parking (10.20)
4105 Amends §5.12.020D3, electrician's license (5.12)
4108 Amends §5.30.150, health rules (5.30)
4109 Adds to Tables III and VIII, traffic (Tables III, VIII)
4110 Amends §16.04.090 A4, building code (16.04)
4111 Adds §§8.16.010 H, I and J, 8.16.020C and 8.16.240 B9 and 10; amends §§8.16.020A, 8.16.060, 8.16.070 B and C, 8.16.080, 8.16.140, 8.16.250, 8.16.270, 8.16.280, 8.16.290, 8.16.300, 8.16.310, 8.16.320 and 8.16.330; repeals and recreates §§8.16.010 D and F, 8.16.030, 8.16.090, 8.16.100, 8.16.110, 8.16.120, 8.16.130, 8.16.170, 8.16.180, 8.16.190, 8.16.200, 8.16.210, 8.16.220, 8.16.230, 8.16.240B 7 and 8, and 8.16.260; retitles Ch. 8.16, food service establishments (8.16)
4112 Adds subsection B to, and renumbers subsections B, C and D as C, D and E of, §18.04.060, zoning (18.04)
4114 Adds §§10.24.010K and 10.24.020 C5, parking (10.24)
4117 Amends §4.04.030 C, cable television (4.04)
4118 Amends §10.20.090, parking meters and lots (10.20)
4120 Adds to Table IX, parking meter locations (Repealed by 4243)

4127 Amends §§9.84.040, 9.84.050, 9.84.060 and 9.84.070, loitering (9.84)
4128 Adds to, and amends, Table VIII; adds §10.24.020 C6, parking (10.24, Table VIII)
4129 Adds to Table III, stop intersections (Table III)
4130 Amends §2.56.050, plan commission (2.56)
4132 Adds to, and amends, Table VIII, parking (Table VIII)
4133 Amends §§16.16.020 G, and 16.16.100, sign code (16.16)
4134 Repeals Ch. 18.24 (Repealer)
4135 Adds §§18.08.245, 18.08.447, 18.68.020 N, 18.68.025 F and G, 18.84.010 37 and 18.84.025 N and O; amends §§16.16.120 and 18.28.060, ground signs (16.16, 18.08, 18.28, 18.68, 18.84)
4136 Amends §§18.93.070 A and C, and 18.93.080; repeals subsections A and B and amends subsection C of §18.92.170, zoning (18.92, 18.93)
4137 Adds to Table VII, parking (Table VII)
4138 Adds to Table III, stop intersections (Table III)
4139 Amends §10.36.010, snow emergency regulations (10.36)
4142 Adds Ch. 9.82, library materials (9.82)
4144 Adds to Table III, stop intersections (Table III)
4146 Adds §10.44.070, and amends §§10.44.030 and 10.44.050, traffic
4149 Adds subsection C to §16.28.110, heating code (16.28)
4150 Adds Ch. 3.30, economic development fund (3.30)
4153 Adds subsection G to §18.74.025, subsection 38 to §18.84.020, zoning (18.74, 18.84)
4154 Amends §§9.84.040 and 9.84.050, loitering (9.84)
4155 Adds §6.10.015, pet shops and kennels; amends §6.04.010, dog and cat license (6.04, 6.10) 4156 Amends §8.32.180, refuse collection (8.32)
4157 Adds new subsection A to §10.44.050 renumbering subsections A--H to B--I; amends §10.24.020, vehicles and traffic (10.24, 10.44)
4158 Adds subsection L to §10.24.010, special parking restrictions (10.24)
4159 Amends subsection I of §16.16.220, sign code (16.16)
4160 Amends §6.04.010, dog and cat license (6.04)
4164 Adds to and deletes items from Table VIII parking during specified hours; repeals subsection B 1 of §10.24.020, special parking restrictions (10.24, Table VIII)
4165 Adds to Table III, stop intersections (Repealed by 4195)
4166 Amends §2.84.160, cemetery regulations (2.84)
4171 Amends subsection A of §5.30.070, intoxicating liquor (5.30)
4172 Repeals and replaces §15.04.020; renumbers §15.04.030 B, D, E, F, G, H, I and J as §§15.04.040, 15.04.050, 15.04.060, 15.04.070, 15.04.080, 15.04.090, 15.04.100 and 15.04.110, respectively; §15.04.030A renumbered, repealed and recreated as §15.04.030; renumbers §§15.04.040 and 15.04.050 as §§15.04.120 and 15.04.130, respectively, sewerage service charge (15.04)
4173 Adds Ch. 15.08, sewer regulations, §14.08.065, waterworks; renumbers §§16.20.080, 16.20.160 and 16.20.170 as §§13.10.010, 13.10.020 and 13.10.030 respectively; repeals Ch. 16.20, plumbing code, §14.04.040, waterworks (13.10, 14.08, 15.08)
4174 Amends §1.24.030A, citations, §§6.04.020 and 6.08.060A, animals (1.24, 6.04, 6.08)
4175 Amends §2.28.060; repeals §§2.28.050, 2.28.070, 2.28.080, 2.28.090, 2.28.100, 2.28.110, 2.28.120, 2.28.130 and 2.28.140, fire department (2.28)
4177 Adds to Table VIII, parking during specified hours (Table VIII)
4178 Amends §16.20.080, street openings (13.10)
4180 Amends §8.32.180, refuse collection and disposal (8.32)
4181 Amends §§16.24.040, 16.24.120 and 16.24.130, electrical code (16.24)
4183 Amends §§5.28.140 and 5.30.200, business licenses and regulations (5.28, 5.30)
4185 Amends §5.12.020C, electrician's license (5.12)
4186 Amends §§2.54.010 and 2.54.020, changes title of Ch. 2.54, department of planning and development (2.54)
4195 Amends and repeals items of Table III, stop intersections (Table III)
4196 Adds subsection E to §5.56.120, massage establishments (5.56)
4198 Adds item to Table III, stop intersections (Table III)
4201 Amends §5.24.090, junk dealer (5.24)
4202 Amends §5.34.020, 5.34.030 renumbered §5.34.030A and §5.34.030B created, peddlers and hawkers (5.34)
4205 Adds subsection C to §10.40.050, vehicles and traffic (10.40)
4207 Adds item to Table VII, parking prohibited (Table VII)
4208 Repeals and replaces subsection A of §10.24.010, special parking restrictions (10.24)
4211 Amends §15.08.030, plumbing code (15.08)
4212 Amends Table VIII, parking during specified hours (Table VIII)
4214 Amends Table II and III, through streets and stop intersections (Table II, III)

4215 Amends Table VII, parking prohibited (Table VII)
4217 Amends Table VII, parking prohibited (Table VII)
4220 Adds §10.40.170, exhibition driving; amends §§1.24.010 and 1.24.030, citations (1.24, 10.40)
4222 Amends subsection B of §16.08.150, housing code (16.08)
4223 Amends Table VII, parking prohibited (Table VII)
4224 Amends §§8.08.060 and 8.08.090, milk regulations (8.08)
4230 Amends §§14.20.020, 14.20.050, 14.20.060, 14.20.090, 14.20.135 and 14.20.150; repeals and replaces §14.20.070, water rates and charges (14.20)
4231 Amends §§15.04.030 and 15.04.040, sewerage service charge (Not codified)
4232 Amends §5.24.020, junk dealers (5.24)
4233 Amends §1.24.040, citations (1.24)
4234 Amends §1.24.010, citations (1.24)
4235 Amends §§10.20.010, 10.20.020 and 10.20.080, parking meters and lots (10.20)
4236 Repeals §§10.16.020, 10.16.030 and 10.20.040 (Repealer)
4238 Amends Tables VII and VIII, parking (Table VII, VIII)
4239 Amends Table III, stop intersections (Table III)
4240 Amends §2.20.030, election officials (2.20)
4243 Amends Table IX, parking meter locations (Table IX)
4244 Adds subsection D to §18.64.030, office/professional districts (18.64)
4246 Amends §§1.24.010, 1.24.030, 10.44.050 and 13.16.010 (1.24, 10.44, 13.16)
4247 Amends §§9.16.010, 9.16.020, 9.16.030, 9.16.040 and 9.16.060, fair housing; deletes §9.16.050 (9.16)
4248 Repeals and recreates Ch. 18.90, conservancy districts (18.90)
4250 Amends §§18.28.110, 18.28.140, 18.44.030, 18.44.040, 18.44.070, 18.48.030, 18.48.050, 18.48.060 and 18.48.080, zoning (18.28, 18.44, 18.48)
4252 Amends §9.60.160, parades (9.60)
4255 Repeals and recreates §§18.08.135, 18.32.010(G), 18.40.020(C), 18.44.020(C), 18.44.025(D), 18.52.020(D), 18.52.020(E), 18.68.025(E); amends §§18.28.150(A), 18.60.030(I), 18.68.025(D), 18.84.020(36); repeals §18.44.025(E); creates 18.32.015(G)(H), 18.40.025(C)(D), 18.44.025(I)(J), 18.52.020(M), zoning code (18.08, 18.28, 18.32, 18.40, 18.44, 18.52, 18.60, 18.68, 18.84)
4256 Amends §16.04.080, building code; creates chapter 18.30, site plans; and amends 18.90.035, conservancy districts (16.04, 18.30, 18.90)
4261 Adds items to Tables VII, parking prohibited and VIII, parking during specified hours (2 a.m. to 6 a.m.) (Table VII, VIII)
4262 Repeals and recreates §13.20.010, materials on sidewalks (13.20)
4263 Adds subsections 5, 6 and 7 to paragraph D of §18.08.030, sewer regulations; and repeals and recreates paragraph C of §16.04.090, building code (118.08, 16.04)
4264 Amends §2.36.010; and repeals 2.36.040 and 2.36.060, police department (2.36)
4265 Amends §15.04.030(B)(7) and amends §15.04.040 by relettering subsection A and creating subsection B, sewerage service charge (15.04)
4266 Amends §§5.28.080(I)(K), fermented malt beverages and 5.30.170(A)(B), intoxicating liquor (5.28, 5.30)
4268 Amends §16.32.010 and repeals and recreates §16.32.050, fire prevention code (16.32)
4270 Amends 13.10.010, street openings (13.10)
4271 Adds items to Table VII, parking prohibited (Table VII)
4276 Amends §5.48.070 and repeals §5.48.080, roller skating rinks (5.48)
4277 Adds items to Table 1, speed limits (Table 1)
4278 Creates subsection M in §§5.28 and 5.30, fermented malt beverages and intoxicating liquor (5.28, 5.30)
4284 Repeals and recreates §5.12.020, electrician's license; and amends 16.24.200, electrical code (5.12, 16.24)
4288 Amends §1.24.030, citations for ordinance violations (1.24)
4289 Creates §2.36.110, disposal of abandoned property, police department (2.36)
4290 Adds subsection C to §9.24.130, boating regulations (9.24)
4291 Creates Section 1.16.160, forfeitures--additional amount imposed; and amends §1.24.030, citations for ordinance violations (1.16, 1.24)
4293 Repeals and recreates §2.65, landmarks (2.65)
4292 Amends §15.04.040, sewerage service charge (15.04)
4297 Repeals and adds items from and to Table VII, parking during specified hours (Table VII)
4298 Repeals item from Table VI, left turns prohibited (Table VI)
4299 Amends §18.04 by creating §18.04.065, general provisions and enforcement (18.04)
4300 Repeals and recreates subsection A.(8) of §15.04.030, sewerage service charge, (15.04)

4311 Adds items to Table VII, parking prohibited; Table VIII, parking during specified hours; Table IX, parking meter locations (Table VII, VIII, IX)
4312 Repeals and adds items from and to Table VII, parking prohibited and adds item to Table VIII, parking during specified hours (Table VII, Table VIII)
4314 Amends §18.20 by creating §§18.20.120, E. Clairemont Avenue setback line and §§18.20.130, Fairfax Street setback line (18.20)
4320 Amends §§4.04.030, grant of franchise (4.04)
4321 Creates §§18.08.537 and §§18.31.025, wind energy conversion systems (18.08, 18.31)
4323 Creates subsections I and K in §§5.28.080 and subsections A and B in §§5.30.170, fermented malt beverages and intoxicating liquor (5.28, 5.30)
4324 Amends §18.20 by creating §§18.20.040, Highland Avenue setback lines and §§18.20.150, Fairfax Avenue setback lines (18.20)
4327 Amends §1.24, citations for ordinance violations and §9.32, fireworks and firearms (1.24, 9.32) 4328 Repeals and recreates §1.08, public records (1.08)
4329 Creates §§9.82.025, unauthorized or fraudulent access to library services (9.82)
4331 Amends §§1.08.040, public access to records (1.08)
4332 Repeals and recreates §18.93, NC--Neighborhood Conservation Districts (18.93)
4333 Amends subsection M in §§5.28.080, fermented malt beverages (5.28)
4334 Amends §1.24, citations for ordinance violations (1.24)
4336 Amends Table VII, parking prohibited; amends Table VIII, parking during specified hours (Table VII, VIII)
4341 Creates §§18.20.160, London Road setback lines (18.20)
4342 Creates §8.44, underground utilities required (8.44)
4343 Creates §§9.04.040, charges for false alarms (9.04)
4345 Amends §4.04, rates and franchise fees (4.04)
4346 Amends §§3.16.010, special assessments (3.16)
4347 Amends §§9.60.160, parades--regulations; creates §§9.60.165, fees; and amends §§9.60.170, violation--penalty (9.60)
4348 Amends §§4.04.120, rates and franchise fees (4.04)
4349 Amends §18.30, site plans (18.30)
4350 Creates §§18.20.170, Highway 53 East Frontage Road setback lines (18.20)
4351 Repeals §§10.04.040, negligent and drunk driving provisions; amends §§10.44.030, special local regulations; repeals §§10.44.040, negligent and drunk driving; amends §§10.44.050, parking (10.04, 10.44)
4352 Amends Table VIII, parking during specified hours, by creating "Loading zones--between eight a.m. and eleven a.m. (Table VIII)
4353 Creates §16.36, development standards (16.36)
4356 Amends §5.22, heating contractor; amends §16.28, heating code (5.22, 16.28)
4357 Amends §5.28, fermented malt beverages, by creating §§5.28.095, license--revocation upon abandonment of premises; amends §5.30, intoxicating liquor, by creating §§5.30.165, license--revocation upon abandonment of premises (5.28, 5.30)
4358 Adds, amends and repeals to and from Table VIII, parking during specified hours (Table VIII) 4359 Amends §§16.20.080, street openings-fees (16.20)
4361 Adds to Table VII, parking prohibited; repeals from and adds to Table VIII, parking during specified hours (Table VII, VIII)
4362 Amends §§16.08.160, rooming house license procedure (16.08)
4366 Amends §5.20, house movers (5.20)
4367 Creates §§9.84.075, juvenile shoplifting (9.84)
4368 Amends §§8.32.180, charge for garbage collection (8.32)
4369 Adds to Table VII, parking prohibited
4370 Amends §§16.16.020, sign code; amends §18.08, definitions; amends §§18.08.115, central business district (16.16, 18.08)
4371 Creates subchapter IX of Title 16, swimming pools (16.04)
4374 Repeals and recreates §§18.08.270; repeals §§18.08.430; repeals §§18.32.010 H.4; amends §§18.32.015; repeals §§18.40.020 G; amends §§18.40.025; amends §18.44.025; creates §18.29, home occupations; amends §§18.29.030; creates §§18.31.024 (18.08, 18.29, 18.31, 18.32, 18.40, 18.44)
4376 Creates §§5.28.095 and §§5.30.085, fermented malt beverages and intoxicating liquor (5.28, 5.30)
4377 Amends §§5.28.080 K, fermented malt beverages (5.28)
4378 Amends §§9,56.010, disorderly conduct; amends §§9.56.080, amplifying equipment--penalty; creates §§9.56.090, responsibility of owner or occupant (9.56)
4383 Creates §§13.24.075, neighborhood mail boxes permitted: conditions (13.24)
4385 Creates §§18.20.180 of the zoning ordinance, State Street setback lines (18.20)

4386 Repeals and recreates §9.43, exposing minors to harmful materials (9.43)
4387 Amends §§18.04.09 C (18.04)
4392 Amends §§16.12.040, mobile home code (16.12)
4393 Adds to and repeals from Table VII, parking during specified hours; repeals from Table VIII, parking during specified hours (Table VII, VIII)
4394 Repeals and recreates §5.34, direct sellers (5.34)
4397 Creates §§13.12.030, penalty--delinquent personal property taxes (13.12)
4402 Creates §§18.20.190, Freedom Drive setback lines (18.20)
4403 Creates §§15.08.045, sewer regulations--service outside corporate limits (15.08)
4405 Amends §§5.30.070, intoxicating liquor--licenses-number limited (5.30)
4406 Amends §§1.24.040 B, citations for ordinance violations (1.24)
4409 Amends §16.08, housing code (16.08)
4413 Amends Title 4, cable television (4.04)
4415 Adds to Table VII, parking prohibited; amends, adds to and repeals from Table VIII, parking during specified hours (Table VII, VIII)
4418 Amends §§16.24.120 of electrical code, permit--issuance (16.24)
4420 Amends §9.32, fireworks and firearms (9.32)
4421 Amends §§10.40.040, alley use regulations (10.40)
4423 Amends Chapter VII, waterworks (14.04, 14.08, 14.12, 14.20)
4424 Adds to and amends Table VIII, parking during specified hours (Table VIII)
4426 Amends §§16.18.120, rooming house, dormitory rooms and rooming units (16.18)
4427 Amends §§8.32.030 A, refuse collection and disposal (8.32)
4429 Amends §§16.28.120, heating code gas installations (16.28)
4431 Creates §§10.12.060, removal of unlawfully parked vehicles (10.12)
4432 Amends and adds to Table VIII, parking during specified hours (Table VIII)
4434 Creates §10.38, alternate side parking; amends §§10.44.030, special local regulations (10.38, 10.44)
4435 Amends §§5.28.040, fermented malt beverages, license-fees (5.28)
4436 Amends §§1.04.100, notice to owners of property (1.04)
4438 Amends §§14.12.070, waterworks (14.12)
4439 Amends §§15.04.060, measurement of water consumption not yet determined--charges (15.04) 4442 Amends §§3.16.020, special assessments (3.16)
4443 Amends §16.24, electrical code (16.24)
4444 Creates §§5.28.135, mandatory operator's training (5.28)
4445 Amends §§14.08.140, waterworks-service outside corporate limits (14.08)
4446 Adds to Table VII, parking prohibited; amends and adds to Table VIII, parking during specified hours (Table VII, VIII)
4447 Amends §§16.24.150, wiring methods and installations (16.24)
4448 Amends §§18.74.025, zoning code (18.74)
4449 Creates §§18.31.028, uses requiring Class A fermented malt beverage licenses; amends §§18.31.024 (18.31)
4451 Amends §§10.20.080, meters--parking lots, ramps and streets; creates §§10.20.100 C, Schlegelmilch-McDaniel Lot (10.20)
4454 Amends §10.20, parking meters and lots (10.20)
4455 Amends §5.34, direct sellers (5.34)
4456 Creates §§16.36.080, parking lot and driveway surfaces; amends §§16.04.090; amends §§18.28.150, automobile parking space regulations; amends §§18.28.155, residential off street parking (16.04, 16.36, 18.28)
4459 Repeals §§18.28.150 E; creates §§16.36.120, drive apron width--nonresidential use (16.36, 18.28)
4460 Amends §§13.16.030, scattering papers unlawful (13.16)
4470 Adds to and amends §§10.20.080, meters--parking lots, ramps and streets; adds to and amends Table VIII, parking during specified hours (10.20, 13.16)
4471 Amends §§10.08.100, parking (bicycle) (10.08)
4472 Amends §§3.16.020, payments--installments (special assessments) (3.16)
4475 Amends §§15.08.010, administrative code definitions; amends §§15.08.030, plumbing code; amends §§15.08.050, private sewage disposal; amends §§15.08.060, building sewers and connections (15.08)
4476 Amends and repeals from Table VII, parking prohibited; amends, adds to and repeals from Table VIII, parking during specified hours (Table VII, Table VIII)
4477 Amends and repeals from Table VII, parking prohibited; repeals from Table VIII, parking during specified hours; creates Table X, parking, stopping and standing prohibited (Table VII, VIII, X) 4481 Repeals and recreates §5.28, fermented malt beverages, to be renamed alcohol beverages; repeals §5.30, intoxicating liquor (5.28, 5.30)

4482 Amends §§18.08.190; amends §§18.32.015 D 3; creates §§18.40.025 G; creates §§18.44.025 C 7 (18.08, 18.32, 18.40, 18.44)
4485 Amends §§9.84.040, jurisdiction (offenses by or against minors); repeals and recreates §§9.84.050, alcohol beverages and minors; amends §§9.84.080, penalty (9.84)
4487 Amends §§5.28.100, license fee (5.28)
4488 Amends §§9.32.025, discharging firearms; amends §§9.32.027, possession of firearms--public buildings, business establishments and public areas (9.32)
4489 Adds to Table II, through streets; adds to Table III, stop intersections; adds to and repeals from Table VII, parking prohibited; amends, adds to and repeals from Table VIII, parking during specified hours; renumbers Tables X, XI, XII and XIII; amends Table X, parking, stopping and standing prohibited (Table II, III, VII, VIII, X, XI, XII, XIII)
4491 Amends §§2.04.040, city departments; amends §§2.16.010, duties imposed; amends title of §2.24; amends §§2.24.010, department created; amends §§2.24.020; amends §§2.24.090; amends §§2.24.130; amends §§2.24.140 (2.04, 2.16, 2.24 charter ordinance)
4492 Amends §§2.40.030, director appointed; amends §§2.24.040, divisions designated (2.40)
4493 Amends Title 18, zoning, to provide for family day care centers (18.08, 18.32, 18.36, 18.40, 18.44, 18.48, 18.52)
4494 Amends §§8.32.230, garbage accumulation--nuisance when (8.32)
4495 Creates §§8.28.110, violation and penalty (weeds, yards and lawns) (8.28)
4497 Adds to Table VII, parking prohibited; adds to Table VIII, parking during specified hours; adds to and amends Table X, parking, stopping and standing prohibited (Table VII, VIII)
4498 Amends §§5.28.095, mandatory operator's training (5.28)
4499 Creates §§10.24.015, heavy vehicle parking (10.24)
4503 Amends §§5.52.020, licensee--liability insurance (tree trimmer) (5.52)
4504 Amends §§6.12.010, prohibited animals (6.12)
4506 Creates §§18.20.220, Hendrickson Drive setback lines; amends §§18.80.040 B; repeals and recreates §§18.80.050, rear yard required (18.20, 18.80)
4507 Amends §§5.28.120, licenses--number limited (alcohol beverages) (5.28)
4510 Repeals and recreates §13.04, construction and repair (streets and sidewalks); amends §§17.12.280 sidewalks (13.04, 17.12)
4511 Amends §§10.44.030 A, special local regulations (penalties for traffic violations) (10.44)
4512 Repeals and recreates subsections in §§5.28.095, mandatory operator's training (5.28)
4513 Amends §§10.20.080, meters--parking lots, ramps and streets; creates §§10.20.100 A, riverside parking deck (10.20)
4515 Amends various sections to provide for administrative issuance of certain licenses (2.16, 5.02, 5.10, 5.12, 5.20, 5.22, 5.24, 5.42, 5.46 5.48, 5.54, 5.56, 8.16, 8.32, 16.12)
4519 Amends §15.04.020; amends §§15.08.090 A and C; creates §15.12, industrial pretreatment (15.04, 15.08, 15.12)
4521 Adds to and amends §§2.08.010, meetings--regular--times (City Council) (2.08)
4522 Amends §§10.24.020, handicapped persons--parking; amends and adds to Table I, speed limits; amends Table VII, parking prohibited; adds to and deletes from Table VIII, parking during specified hours; deletes from Table IX, parking meter locations (10.24, Table I, VII, VIII, IX)
4523 Amends §§10.38.010, alternate side parking (10.38)
4524 Creates §§10.40.180, bus transfer station (10.40)
4525 Creates §§5.28.090 C; amends §§5.28.095 A 1 (alcohol beverages) (5.28)
4526 Amends Table I, speed limits; adds to Table III, stop intersections; adds to Table VII, parking prohibited (Table I, III, VII)
4527 Amends §§8.32.180, charge (refuse collection and disposal) (8.32)
4528 Renumbers Tables V through XII; creates Table V, yield intersections; adds to Table III, stop intersections; adds to and deletes from Table VIII, parking prohibited; amends and deletes from Table IX, parking during specified hours (Table III, V, VIII, IX)
4529 Amends §10.38, alternate side parking (10.38)
4530 Amends §15.04, sewerage service charge (15.04)
4531 Repeals §§9.56.020, police arrests (9.56)
4533 Repeals and recreates §18.94, floodplains (18.94)
4534 Creates §10.42, abandoned motor vehicles; repeals §§10.40.030 B, vehicle storage on street; amends §§10.44.030, special local regulations (10.40, 10.42, 10.44)
4535 Amends Table IX, parking during specified hours (Table IX)
4537 Amends various sections of the zoning ordinance with reference to adult day care centers (18.08, 18.28, 18.32, 18.40, 18.44, 18.52, 18.68)
4540 Creates Table XI, traffic control signals; renumbers Tables XI, XII, XIII, XIV (Table XI, XII, XIII, XIV)
4542 Adds to, amends, and deletes from Table VIII, parking prohibited; adds to, amends and deletes from Table IX, parking during specified hours (Table VIII, IX)

4545 Amends §§15.08.010; amends §§15.08.030 (15.08)
4546 Adds to Table VIII, parking prohibited; adds to, amends and deletes from Table IX, parking during specified hours (Table VIII, IX)
4547 Creates §§5.34.025, shows and exhibitions (direct sellers) (5.34)
4549 Amends §§10.12.060, removal of unlawfully parked vehicles (10.12)
4550 Amends §§10.20.080, meters--parking lots, ramps and streets; amends §§10.20.100, unmetered parking lots and parking ramps (10.20)
4552 Creates §§2.16.040, issuance of certain licenses and permits (2.16)
4553 Creates §9.79, taxicabs and motor buses; amends §§1.24.010, citation method adopted; amends §§1.24.030, deposit schedule (1.24, 9.79)
4555 Amends §§2.84.160, fees and charges (cemetery regulations) (2.84)
4556 Repeals and recreates §§8.20.030 C 2; repeals and recreates §§8.20.070 C; amends §§8.20.080; repeals and recreates §§8.20.110 (8.20)
4557 Amends §§10.08.020; amends §§10.08.030; amends §§10.08.040; creates §§10.08.045; amends §§10.08.050; amends §§10.08.060 (10.08)
4558 Adds to Table IX, parking during specified hours (Table IX)
4559 Creates §§9.10.030 B, devices prohibited (private alarm systems) (9.10)
4563 Amends §§1.08,070, destruction of records (1.08)
4564 Amends §§16.12.040, park license--application procedure (mobile homes) (16.12)
4566 Amends §§10.24.020, handicapped persons--parking; adds to Table II, through streets; adds to and amends Table III, stop intersections; adds to Table IV, stops at railroad crossings; amends Table VIII, parking prohibited; amends and adds to Table IX, parking during specified hours (10.24, Table II, III, IV, VIII, IX)
4567 Amends §§18.94.190, board of appeals (floodplains) (18.94)
4569 Amends and deletes from Table VIII, parking prohibited (Table VIII)
4572 Amends §§10.24.020, handicapped persons--parking (10.24)
4579 Amends §5.12, electrician's license; amends §§16.24.040 A; creates §§16.24.180, abandoned wiring (5.12, 16.24)
4580 Amends §§16.12.160, license revocation or suspension (mobile home code) (16.12)
4581 Creates §§15.04.035, wholesale charge (sewerage service charge) (15.04)
4582 Adds to and amends Table II, through streets; adds to and amends Table III, stop intersections (Table II, III)
4583 Amends §§10.08.110, riding on sidewalks (Water Street District) (10.08)
4588 Creates §§5.54.095, exemptions (vehicles for hire) (5.54)
4590 Amends §§5.56.120, exemptions (massage establishments) (5.56)
4594 Amends Title 10, vehicles and traffic (10.04)
4593 Adds to Table III, stop intersections; adds to Table VIII, parking prohibited; adds to and deletes from Table IX, parking during specified hours (Table III, VIII, IX)
4595 Amends §§3.16.050, payment deferment--review of applicant (special assessments) (3.16)
4597 Amends §10.38, alternate side parking (10.38)
4598 Amends §§10.08.160, rooming house license procedure (10.08)
4600 Amends various sections relating to automobile laundries (changing name to car washes) (10.08, 18.28, 18.70, 18.74)
4603 Repeals §§10.38.020, exceptions (alternate side parking) (10.38)
4605 Amends §§10.36.010, declaration of emergency; amends §§10.36.020, vehicles prohibited--emergency termination (snow emergency regulations) (10.36)
4610 Amends various sections of §4.04, cable television (4.04)
4611 Adds to Table III, stop intersections; amends and deletes from Table VIII, parking prohibited (Table III, VIII)
4613 Amends §§6.04.010, license--required-fee (dog and cat license) (6.04)
4614 Amends §§3.20.020, levy of tax--rate (room tax) (3.20)
4616 Amends §§15.04.030, wastewater service charge (15.04)
4619 Amends §§16.32.015, burning conditions; amends §§16.32.060, violations--penalty (fire prevention code) (16.32)
4622 Amends §§16.08.060, definitions; amends §§16.08.080, light, ventilation and heating minimum standards; amends §§16.08.090, safety and sanitary facilities maintenance; amends §§16.08.160, rooming house license procedure (16.08)
4623 Amends §§5.56.020, massage establishments--facilities (5.56)
4624 Adds to Table VIII, parking prohibited (Table VIII)
4627 Amends various sections to revise and update obsolete references to state liquor laws (5.26, 5.42, 9.52, 9.76)
4628 Repeals and recreates provisions relating to fire limits and adds same to §16.32, fire prevention code (16.32)

4629 Repeals §§2.20.050, canvass of elections (2.20)
4630 Amends §§1.24.010, citation method adopted; amends §§1.24.030, deposit schedule (1.24)
4639 Amends §§5.34.050, direct sellers--investigation (5.34)
4640 Amends §§16.24.150, electrical code--wiring methods and installations (16.24)
4641 Amends Table II, through streets; amends Table III, stop intersections; amends Table XI, traffic control signals (Table II, Table III, Table XI)
4642 Amends §§10.40.055, vehicles and traffic--regulations on public school property (10.40)
4643 Amends §§9.52.040, consumption of alcohol beverages or possession of open containers in city buildings, public parking lots and public parking ramps; amends §§9.52.050, penalty (9.52)
4644 Amends §§13.12.025, skateboards, roller skates and roller skis (13.12)
4645 Amends §§10.12.020, special regulations--enforcement and obedience to traffic control signals (10.12)
4646 Amends §§2.92.150, emergency procurements (2.92 charter ordinance)
4647 Amends §18.30, site plans, and other related ordinances to require plan commission approval of site plans (16.36, 18.30, 18.32)
4650 Amends §§5.52.020, licensee--liability insurance; amends §§5.52.040, violation--penalty (tree trimmers) (5.52)
4651 Amends §§5.28.050, issuance of license restricted--unpaid local taxes--notice to applicant (alcohol beverages) (5.28)
4652 Amends §§1.04.110, publication of ordinances (1.04)
4653 Amends §§10.24.020, handicapped persons--parking; amends Table VIII, parking prohibited; amends Table IX, parking during specified hours (10.24, Table VIII, Table IX)
4655 Amends §§10.40.160, regulation of motor-driven cycles and all-terrain vehicles (10.40)
4656 Amends §§14.20.050, rates--public fire protection service; amends §§14.20.053, public fire protection--suburban; amends §§14.20.060, rates--metered; amends §§14.20.070, reconnection charge; amends §§14.20.090, unmetered service; amends §§14.20.095, seasonal service; repeals and recreates §§14.20.110, suburban service; repeals §§14.20.120, air conditioning (nonconserved compressor cooling); amends §§14.20.135, public service; amends §§14.20.140, bulk water; amends §§14.20.150, water lateral installation charge (14.20)
4662 Amends §§10.44.050, parking (handicapped) (10.44)
4663 Amends §§5.28.035, presence of underage persons on premise (5.28)
4665 Amends §§2.28.150, ambulance service (2.28)
4666 Amends Table IX, parking during specified hours (Table IX)
4667 Amends §§16.08.060, definitions; amends §§16.08.070, dwelling unit minimum requirements; amends §§16.08.120, rooming house, dormitory rooms and rooming units; amends §§16.08.080, light, ventilation and heating minimum standards; amends §§16.08.150, enforcement--notices, orders and hearings (16.08)
4668 Amends §§10.04.055, traffic regulations--annexed areas (10.04)
4670 Amends Title 17, subdivisions (17.04, 17.08, 17.12, 17.16, 17.20, 17.24)
4671 Amends Table I, speed limits; amends Table III, stop intersections; amends Table VIII, parking prohibited; amends Table XII, parking, stopping and standing prohibited (Tables I, III, VIII, XII) 4673 Creates §2.50, utility appeals board; amends §§15.04.090, seasonal water usage--charges; repeals §§15.04.080, appeal board established (2.50, 15.04)
4674 Amends §§8.32.120, prohibited dumping (8.32)
4676 Amends §§5.28.090, operator's license (5.28)
4677 Amends §§16.16.105, election campaign signs (16.16)
4679 Amends §§8.40.020, storm sewers--prohibited material (8.40)
4680 Repeals and recreates §§2.36.110, disposal of abandoned property (2.36)
4681 Repeals §5.08, closing-out sales (5.08)
4682 Amends §§2.84.110, monuments and markers (2.84)
4683 Amends §§10.20.080, meters--parking lots, ramps and streets; amends §§10.20.100, unmetered parking lots and parking ramps; amends Table XII, parking, stopping and standing prohibited (10.20, Table XII)
4688 Amends §§2.04.010 (2.04 charter ordinance)
4690 Creates §18.95, shoreland-wetlands (18.95)
4691 Amends Table III, stop intersections; amends Table VIII, parking prohibited; amends Table IX, parking during specified hours (Table III, Table VIII, Table IX)
4697 Amends §§2.04.010 (2.04)
4699 Amends Table III, stop intersections; amends Table VIII, parking prohibited (Tables III, VIII)
4700 Repeals and recreates §2.64, city waterways and parks commission (2.64)
4701 Amends Table IX, parking during specified hours (Table IX)
4703 Amends §§8.32.180, refuse collection and disposal charge (8.32)
4705 Creates §§2.04.050, appointment to boards and commissions (2.04 charter ordinance)

4708 Amends §§2.56.020, composition; creates §§2.56.025, chairperson--election (plan commission) (2.56 charter ordinance)
4711 Amends §§8.32.180, refuse collection and disposal charge (8.32)
4716 Amends Title 14, waterworks (14.04, 14.08)
4717 Amends §§16.12.130, responsibilities of management (mobile home code) (16.12)
4719 Amends Table I, speed limits (Table I)
4720 Creates §18.10, planned development (18.10)
4723 Amends Table I, speed limits; amends Table III, stop intersections; amends Table X, parking meter locations; amends Table XII, parking, stopping and standing prohibited (Tables I, III, X, XII)
4728 Amends §§2.08.010, meetings--regular--times (City Council) (2.08)
4731 Amends §§8.32.260, violation, penalty (8.32)
4732 Creates §§1.16.025, aiding and abetting ordinance violations (1.16)
4735 Amends Table III, stop intersections; amends Table VIII, parking prohibited; amends Table IX, parking during specified hours (Tables III, VIII, IX)
4737 Amends §§5.28.025, application filing dates (alcohol beverages) (5.28)
4738 Renumbers various subsections of §9.32, fireworks and firearms; repeals and recreates §§9.32.010, definition; repeals and recreates §§9.32.020, prohibited; creates §§9.32.025, discharging fireworks (9.32)
4740 Amends §§15.04.040, charge based upon water consumption; amends §§15.04.090, seasonal water usage--charges; amends §§15.04.100, water bill estimate to be used in conjunction with actual readings (15.04)
4743 Creates §§18.08.012, adolescent day care center; amends various sections by adding adolescent day care center (18.08, 18.32, 18.40, 18.44, 18.52, 18.68)
4744 Amends §§2.84.110, monuments not allowed on single grave spaces (2.84)
4748 Amends §§9.56.070, prohibition of noises disturbing the peace; creates §§9.56.075, loud parties or gatherings; amends §§9.56.080, violation--penalty; amends §§1.24.030, deposit schedule (9.56, 1.24)
4750 Amends Table IX, parking during specified hours (Table IX)
4752 Creates §9.42, obscene materials and performances (9.42)
4753 Amends §§10.12.020, special regulations (enforcement and obedience to traffic control signals) (10.12)
4755 Amends Table IX, parking during specified hours; amends Table XII, parking, stopping and standing prohibited (Tables IX, XII)
4761 Amends §§9.56.090, responsibility of owner or occupant (9.56)
4762 Creates §§18.08.580, adult book store; creates §§18.08.590, adult motion picture theater; creates §§18.08.600, specified sexual activities; creates §§18.08.610, specified anatomical areas; amends §§18.74.020, uses permitted (18.08, 18.74)
4763 Amends §§5.20.020, application (house movers) (5.20)
4764 Amends §§5.28.090, operator's license (5.28)
4771 Amends §§16.08.160, rooming house license procedure (16.08)
4772 Amends §§2.56.070, organization (plan commission) (2.56)
4775 Amends §§1.24.030, deposit schedule (1.24)
4776 Amends §§5.28.120, licenses--number limited (5.28)
4777 Amends §§9.32.030, discharging firearms (9.32)
4780 Amends §§10.20.080, meters--parking lots, ramps and streets; amends Table I, speed limits; amends Table VIII, parking prohibited (10.20, Tables I, VIII)
4781 Creates §§5.28.032, "class B" license for sale of intoxicating liquor (5.28)
4785 Amends §§16.24.200, electrical code (16.24)
4786 Amends §§5.28.030, general license regulations; amends §§5.28.110, license fees; amends §§5.28.120, licenses--number permitted (alcohol beverages) (5.28)
4787 Amends §§18.68.025, conditional uses (C-1 district) (18.68)
4789 Amends various sections relating to fees for licenses and permits (5.40, 5.10, 5.12, 5.14, 5.20, 5.24, 5.28, 5.42, 5.44, 5.54, 5.56, 6.04, 6.16, 8.08, 8.16, 10.20, 15.08, 16.04, 16.24)
4790 Amends §§8.32.030, license--general; amends §§8.32.180, charge (refuse collection and disposal) (8.32)
4794 Amends §§3.16.020, payments--installments (special assessments) (3.16)
4795 Amends Table III, stop intersections; amends Table VIII, parking prohibited; amends Table IX, parking during specified hours (Tables III, VIII, IX)
4796 Amends §§5.28.010, state statutes adopted; amends §§5.28.030, general license regulations (alcohol beverages) (5.28)
4797 Amends Table VIII, parking prohibited; amends Table IX, parking during specified hours (Tables VIII, IX)
4799 Repeals and recreates Chapter 8.36, inoperative motor vehicles (8.36)
4800 Amends Table VIII, parking prohibited (Table VIII)

4803 Amends §§16.08.110, housing code (16.08)
4804 Amends §§16.24.140, minimum standards (electrical code) (16.24)
4813 Amends §§2.60.020, membership--terms--qualifications (transit commission) (2.60 charter ordinance)
4814 Amends §§16.24.130, permit--fees (electrical code) (16.24)
4816 Amends §§5.56.120, exemptions (massage establishments, massage technicians and practice of massage) (5.56)
4817 Creates Ch. 9.77, fraud on residential landlords (9.77)
4820 Amends Table VIII, parking prohibited (Table VIII)
4822 Repeals Ch. 2.66, cable television advisory committee; amends Ch. 4.04, cable television (2.66, 4.04)
4823 Repeals and recreates Ch. 16.16, on-premise signs; creates Ch. 16.18, poster panel signs; repeals and recreates portions of Title 18, zoning (16.16, 16.18, Title 18)
4827 Amends §3.20, room tax (3.20)
4838 Amends §§8.32.010, definitions; creates §8.32.165, mandatory separation of yard waste (8.32) 4840 Amends §§1.24.010, citation method adopted; amends §§1.24.030, deposit schedule; creates §§9.88.010 E (emergency fire protection powers) (1.24, 9.88)
4841 Amends §§1.24.030, deposit schedule (1.24)
4843 Creates §§8.32.235, improper storage of furniture (8.32)
4849 Amends §§16.12.040 G., park license--application procedures (mobile home code) (16.12)
4850 Amends Table II, through streets; amends Table III, stop intersections (Tables II, III)
4851 Amends §§8.32.030, license--general (refuse collection and disposal) (8.32)
4852 Amends §§10.20.110, parking meters and lots (10.20)
4854 Amends §§5.28.025, application filing dates (alcohol beverages) (5.28)
4862 Creates §§2.04.060, acting city manager (2.04 charter ordinance)
4868 Amends Table VIII, parking prohibited; amends Table IX, parking during specified hours (Tables VIII, IX)
4869 Amends §8.28, weeds, yards and lawns (8.28)
4871 Amends §§18.70.025, conditional uses (18.70)
4872 Amends Table II, through streets; amends Table III, stop intersections (Tables II, III)
4873 Amends Table VIII, parking prohibited (Table VIII)
4876 Repeals §§9.76.190, snowmobile operation; amends §§10.40.160, regulation of motor-driven cycles and all-terrain vehicles (9.76, 10.40)
4878 Amends Table VIII, parking prohibited (Table VIII)
4886 Amends §§10.20.080, meters--parking lots, ramps and streets; amends §§10.20.100, unmetered parking lots and ramps (10.20)
4887 Amends §§16.28.110, heating installation permit fees; amends §§16.28.120, gas installations--generally; amends §§16.28.560, codes on file (16.28)
4888 Repeals and recreates §8.08, milk regulations (8.08)
4898 Amends §§1.24.010, citation method adopted; repeals and recreates §§1.24.030, deposit schedule (1.24)
4899 Amends §§10.20.080, meters--parking lots, ramps and streets (10.20)
4901 Amends Table III, stop intersections; amends Table VIII, parking prohibited (Tables III, VIII)
4902 Repeals and recreates §§1.16.010, penalty where no penalty provided; repeals §§1.16.020, second or subsequent convictions and §§1.16.060, forfeitures--additional amount imposed; renumbers §§1.16.025, aiding and abetting ordinance violations (1.16)
4904 Amends §§1.24.010, citation method adopted; amends §§1.24.030, deposit schedule (1.24)
4905 Amends §§16.08.150, enforcement--notices, orders and hearings (housing code) (16.08)
4906 Amends §§16.08.130, health officer--inspections--duties; amends §§16.08.165, housing appearance (16.08)
4912 Amends Table IX, parking during specified hours (Table IX)
4920 Amends §§16.18.170, non-conforming signs (16.18)
4921 Amends §§9.32.040, possession of firearms--public buildings, business establishments and public areas (9.32)
4924 Amends Table II, through streets; amends Table III, stop intersections; amends Table VIII, parking prohibited (Tables II, III, VIII)
4925 Amends §§2.64.030, composition (waterways and parks commission) (2.64)
4931 Amends §§9.24.180, Chippewa River--placement of buoys and markers (9.24)
4933 Amends Table I, speed limits (Table I)
4940 Amends §§10.40.160, regulation of off-road motor-driven cycles, all-terrain vehicles and snowmobiles (10.40)
4942 Amends §§2.68.030, comptroller; creates §§2.68.040, chief of police (Officer's bonds) (2.68)
4943 Amends Ch. 14.20, rates and billing; amends Ch. 15.04, sewerage service charge (14.20, 15.04)
4947 Amends §§16.32.010, codes adopted (fire prevention code) (16.32)

4949 Creates Ch. 9.39, public bridges (9.39)
4956 Amends Table XII, parking, stopping and standing prohibited (Table XII)
4958 Amends §§10.20.080, meters--parking lots, ramps and streets (10.20)
4962 Amends §§5.28.090, operator's license (5.28)
4964 Amends §§1.24.030, deposit schedule (1.24)
4965 Amends Table IX, parking during specified hours (Table IX)
4967 Amends §§5.52.010, license--required--procedure; amends §§5.52.020, licensee-liability insurance; amends §§5.52.030, license--revocation; amends §§5.52.040, violation--penalty; repeals §§8.20.080, licenses (tree trimmer) (5.52, 8.20)
4968 Amends Table III, stop intersections; amends Table VIII, parking prohibited (Tables III, VIII)
4973 Repeals and recreates §§17.24.020, methods of financing; repeals §§17.24.050, street grading (improvements) (17.24)
4975 Amends §§10.20.100, unmetered parking lots and parking ramps (10.20)
4976 Amends Table IX, parking during specified hours (Table IX)
4979 Amends §§18.36.025, conditional uses (mobile home park districts) (18.36)
4980 Amends §§5.34.020, definitions (direct sellers) (5.34)
4981 Repeals and recreates §§13.04.020, deferral of sidewalk construction; creates §§13.04.025, procedures for deferral of sidewalk construction (13.04)
4986 Amends §§16.08.160, rooming house license procedure (16.08)
4987 Amends §§6.04.010, license--required--fee (dog and cat license) (6.04)
4988 Amends §§18.98.020, membership--organization (appeals--board) (18.98)
4989 Amends §§16.32.010, codes adopted (fire prevention code) (16.32)
4992 Amends Table VIII, parking prohibited (Table VIII)
4993 Repeals and recreates Chapter 2.88, civil defense and disaster (2.88)
4994 Creates §§9.84.055, purchase of tobacco products by minors (9.84)
5000 Repeals §§10.40.020, leaving keys in vehicles (10.40)
5001 Repeals §§13.12.030, penalty--delinquent personal property taxes (3.12)
5002 Amends Table III, stop intersections; amends Table V, yield intersections; amends Table VIII, parking prohibited; amends Table IX, parking during specified hours (Tables III, V, VIII, IX)
5004 Amends Chapter 2.54, department of planning and development; amends Title 17, subdivisions; Amends Title 18, zoning (2.54, Title 17, Title 18)
5022 Amends Table VIII, parking prohibited (Table VIII)
5028 Creates §§9.84.055, restrictions on the sale or gift of cigarettes or tobacco products (9.84)
5029 Amends §§10.40.050, school police (10.40)
5030 Repeals and recreates Chapter 5.56, massage establishments, massage technicians and the practice of massage (5.56)
5032 Amends Chapter 16.16, on-premise signs (16.16)
5033 Amends §§9.84.020, violations--warning--prosecution; repeals §§9.84.030, parent liability (9.84)
5034 Amends Table IX, parking during specified hours; amends Table XII, parking, stopping and standing prohibited (Tables IX, XII)
5035 Amends §§9.24.130, boat races, regattas, water skiing (9.24)
5037 Repeals and recreates Title 18, zoning (Title 18)
5057 Amends §§18.05.030 (18.05)
5060 Amends Table I, speed limits; amends Table II, through streets; amends Table III, stop intersections; amends Table VIII, parking prohibited (Tables I, II, III, VIII)
5064 Amends §§1.24.030, deposit schedule; amends §§5.28.010, state statutes adopted (1.24)
5071 Amends §§16.28.020, definitions; amends §§16.28.120, gas pipe installations; repeals §§16.28.130, gas piping; repeals and recreates §§16.28.390, equipment testing--procedure (16.28)
5073 Amends Table II, through streets; amends Table III, stop intersections (Tables II, III)
5074 Amends Table III, stop intersections; amends Table VI, one-way streets and alleys (Tables III, VI)
5075 Amends §§2.84.160, fees and charges (cemeteries); amends §§2.84.170, special regulations applicable only to Block L of Forest Hill Cemetery (2.84)
5077 Amends §§6.08.020, number per family (animal control) (6.08)
5088 Amends §§5.42.030, license--fee (pool halls, billiard halls and bowling alleys) (5.42)
5089 Amends §§5.28.030, general license regulations (5.28)
5090 Amends Table VIII, parking prohibited (Table VIII)
5094 Amends Table IX, parking during specified hours (Table IX)
5095 Amends §§6.08.060, animal excreta; amends §§6.11.010, care of animals (6.08, 6.11)
5096 Amends §§5.28.010, state statutes adopted (alcohol beverages) (5.28)
5098 Repeals and recreates §§18.30.040 D. 11. (fences) (18.30)
5101 Amends §§3.20.160 (room tax) (3.20)
5104 Amends §§16.32.015, burning permits (16.32)
5112 Amends §10.20, parking meters and lots (10.20)

5113 Repeals and recreates §2.20, elections--officials (2.20)
5115 Amends §§2.16.020, licenses--payment of taxes and other obligations (2.16)
5116 Amends §§16.24.040, board of electrical examiners (16.24)
5120 Amends §§18.20.120, recycling facilities (18.20)
5121 Amends §18.04, residential districts; amends §18.30, accessory uses; amends §18.35, conditional uses (18.04, 18.30)
5123 Repeals §§2.28.150, ambulance service (2.28)
5124 Amends §§1.24.020, form and provisions of citations (1.24)
5126 Repeals §5.32, pawnbroker (5.32)
5127 Creates §§8.32.025, yard trash collection (8.32)
5130 Repeals §13.08, excavations; repeals §13.10, street openings; creates §13.10, street excavations and openings (13.08, 13.10)
5131 Amends §§1.08.070, destruction of records (1.08)
5132 Amends §§9.38.012, city buildings (smoking) (9.38)
5133 Amends §§15.04.110, change of occupancy--sewer service charge to be based upon consumption of new occupants at former premises (15.04)
5134 Amends §§10.20.080, meters--parking lots, ramps, and streets (10.20)
5136 Amends §9.76, parking--public grounds (9.76)
5137 Repeals and recreates §§5.54.095, exemptions (vehicles for hire) (5.54)
5138 Amends §5.22, heating contractor; amends §16.16, on-premise signs; amends §16.18, poster panel signs; amends §16.24, electrical code (5.22, 16.16, 16.18, 16.24)
5140 Amends Table VIII, parking prohibited; amends Table IX, parking during specified hours (Tables VIII, XI)
5141 Amends §§10.20.100, unmetered parking lots and parking ramps (10.20)
5143 Amends §§16.32.050, smoke detectors (16.32)
5144 Amends §§8.28.105, waivers (weeds, yards and lawns) (8.28)
5145 Amends Table III, stop intersections (Table III)
5148 Amends Table VIII, parking prohibited; amends Table IX, parking during specified hours (Tables VIII, IX)
5149 Amends §14.20, rates and billings (utility) (14.20)
5152 Amends §18.05, commercial districts; amends §18.35, conditional uses (processing of food related products) (18.05, 18.35)
5153 Amends §18.30, accessory uses; amends §18.35, conditional uses (private garages) (18.30, 18.35)
5154 Amends §9.84, offenses (by or against minors) (9.84)
5155 Amends §16.32, fire prevention code (16.32)
5157 Repeals and recreates §§2.04.010, reorganization--aldermanic districts--council salaries (2.04 charter ordinance)
5163 Amends Table VIII, parking prohibited (Table VIII)
5165 Amends §5.54, vehicles for hire (5.54)
5169 Amends §15.04, sewerage service charge (15.04)
5170 Amends §2.84, cemetery regulations (2.84)
5172 Amends Table VIII, parking prohibited; amends Table IX, parking during specified hours; amends Table XII, parking, stopping and standing prohibited (Tables VIII, IX, XII)
5184 Amends §16.16, on-premise signs (16.16)
5187 Creates §§10.40.135, parking citations--who may issue (10.40)
5188 Amends §5.24, junk dealer; amends §8.32, refuse collection and disposal (5.24, 8.32)
5189 Amends §1.24, citations for ordinance violations (1.24)
5190 Amends §6.04, dog and cat license (6.04)
5193 Amends §5.12, electricians license; amends §16.24, electrical code (5.12, 16.24)
5194 Creates §2.66, cable television advisory committee (2.66)
5195 Amends Table III, stop intersections; amends Table VIII, parking prohibited; amends Table IX, parking during specified hours (Tables III, VIII, IX)
5196 Amends §5.24, junk dealer; amends §8.32, refuse collection and disposal (5.24, 8.32)
5197 Amends §15.04, sewerage service charge (15.04)
5199 Creates §2.67, recycling advisory committee (2.67)
5203 Amends §§8.32.020, license--required; amends §§8.32.150, vehicles--regulations (8.32)
5204 Creates §§16.32.070, storage tanks (16.32)
5205 Amends §§1.24.030, deposit schedule (1.24)
5207 Amends §6.16, pigeons; amends §§18.04.030, establishment of use; amends §§18.35.050, specific provisions (6.16, 8.04, 8.35)
5211 Amends §§3.20.130, negligence--tax evasion--incorrect returns; creates §§3.20.135, interest--penalty--late fee; waiver (3.20)
5213 Repeals §§10.32.090, Putnam Street spur track (10.32)

5214 Amends §§9.64.010, barb wire permitted when; creates §§9.64.015, electric fences; repeals and recreates §§9.64.020, nuisance when (9.64)
5215 Amends §§5.28.035, presence of underage persons on premise (5.28)
5216 Amends Table IX, parking during specified hours (Table IX)
5217 Amends Table VIII, parking prohibited; amends Table IX, parking during specified hours (Tables VIII, IX)
5218 Amends §§2.65.050, procedure for designation of landmarks, landmark sites and historic districts; creates §§2.65.105, transitional provision (2.65)
5221 Amends Table VIII, parking prohibited (Table VIII)
5222 Creates §§6.25.010, hunting (6.25)
5227 Amends §§16.32.070, storage tanks (16.32)
5228 Amends §§10.24.020, handicapped persons--parking (10.24)
5235 Amends §§8.32.020, license--required; creates §§8.32.022, license fees; amends §§8.32.030, license--general; creates §§8.32.032, recyclable collectors; creates §§8.32.035, compliance with laws and regulations; amends §§8.32.040, license or permit--revocation or suspension; amends §§8.32.070, vehicle permits (8.32)
5236 Amends §§10.24.020, physically disabled persons--parking (10.24)
5237 Repeals §§9.50.010, containers in spectator facilities (9.50)
5240 Amends §§5.12.020, classes of licensees; creates §§5.12.055, license renewal (5.12)
5247 Amends §§1.24.030, deposit schedule; creates §8.06, adult-oriented establishments (1.24, 8.06)
5259 Creates §§10.20.095, waiver (10.20)
5260 Amends §§13.12.025, skateboards, roller skates, roller skis, in-line skates or similar equipment (13.12)
5262 Amends Table III, stop intersections; amends Table XI, traffic control signals (Tables III, XI)
5263 Amends §§9.76.165, parks--intoxicants (9.76)
5264 Amends §§10.40.050, school police (10.40)
5266 Repeals Ch. 6.25, hunting; amends §§9.32.030, discharging firearms (6.25, 9.32)
5267 Amends §§10.20.080, meters--parking lots, ramps and streets (10.20)
5268 Amends §§15.08.030, plumbing code (15.08)
5269 Amends Table I, speed limits; amends Table II, through streets; amends Table III, stop intersections; amends Table VIII, parking prohibited; amends Table IX, parking during specified hours (Tables I, I, III, VIII, IX)
5271 Amends Table VIII, parking prohibited (Table VIII)
5273 Creates §§2.08.075, agenda (2.08)
5274 Amends Ch. 14.20, rates and billing (14.20)
5275 Amends §§2.84.160, fees and charges (2.84)
5278 Amends §§10.20.080, meters--parking lots; amends Table IX, parking during specified hours; amends Table XII, parking, stopping and standing prohibited (10.20, Tables IX, XII)
5280 Amends Ch. 16.12, mobile home code; amends Ch. 18.02, definitions; amends Ch. 18.13, R-1B--mobile home park district (16.12, 18.02, 18.13)
5283 Amends Ch. 6.12, keeping certain animals (6.12)
5285 Amends §§2.04.010, reorganization--aldermanic districts--council salaries (2.04 charter ordinance)
5286 Amends §§2.04.010, reorganization--aldermanic districts--council salaries (2.04 charter ordinance)
5288 Amends §§10.20.080, meters--parking lots, ramps and streets; amends Table IX, parking during specified hours (10.20, Table IX)
5288A Amends §§15.04.030, wastewater service charge (15.04)
5289 Amends Ch. 9.38, smoking; amends Ch. 9.84, offenses (by or against minors) (9.38, 9.84)
5294 Repeals and recreates §§15.04.090, seasonal usage--charges (15.04)
5301 Amends Table VIII, parking prohibited (Table VIII)
5302 Amends §§18.10.060, standards and special requirements for a commercial and industrial planned development (18.10)
5306 Amends §§5.28.030, general license requirements (alcohol beverages) (5.28)
5307 Repeals and recreates ch. 18.11, F--floodplain overlay district (18.11)
5319 Amends §§1.24.030, deposit schedule (1.24)
5321 Creates §§2.04.015, city officials--elections (2.04 charter ordinance)
5323 Amends §§2.66.020, composition (cable television advisory committee) (2.66)
5325 Amends §§18.20.190, special setbacks (18.20)
5326 Amends §§15.04.020, definitions; amends §§15.04.030, wastewater service charge; creates §§15.08.055, disposal--septage and holding tank waste (15.04)
5332 Repeals and recreates Ch. 16.04, building code (16.04)
5333 Amends §§18.50.050, certificate of occupancy (18.50)

5334 Repeals §§16.32.070, fire limits--scope; repeals §§16.32.080, fire limits boundaries defined; repeals §§16.32.090, restrictions within the fire limits; repeals §§16.32.100, penalty--fire limits; renumbers §§16.32.075, storage tanks; amends §§16.32.060, violations--penalty (16.32)
5335 Amends §§10.20.080, meters--parking lots, ramps and streets; amends §§10.20.100, unmetered parking lots and parking ramps (10.20)
5336 Amends Table III, stop intersections; amends Table V, yield intersections (Tables III, V)
5342 Amends Table XII, parking, stopping and standing prohibited (Table XII)
5345 Amends §9.76.156, parks--intoxicants (9.76)
5349 Amends Table VIII, parking prohibited; amends Table IX, parking during specified hours (Tables VIII, IX)
5350 Amends §15.04.030, wastewater service charge (15.04)
5351 Amends §10.44.030, special local regulations; amends §10.44.050, parking; creates §10.44.055, citation amount (10.44)
5352 Amends §1.24.030, deposit schedule; amends §5.28.040, license granting; amends §5.28.130, penalty (1.24, 5.28)
5357 Amends §1.08.070, destruction of records (1.08)
5358 Amends Table II, through streets; amends Table III, stop intersections; amends Table VIII, parking prohibited (Tables II, III, VIII)
5359 Amends §16.08.160, rooming house license procedure (16.08)
5360 Creates Ch. 4.06, rate regulation (4.06)
5363 Amends §1.24.030, deposit schedule (1.24)
5369 Amends §10.24.020, physically disabled persons--parking; amends Table IX, parking during specified hours; amends Table XII, parking, stopping and standing prohibited (10.24, Tables IX, XII)
5370 Amends Ch. 2.56, plan commission (2.56 charter ordinance)
5372 Amends §15.04.030, wastewater service charge (15.04)
5373 Amends §16.28.390, equipment testing--procedure (16.28)
5374 Amends §10.24.020, physically disabled persons--parking (10.24)
5375 Amends §2.84.160, fees and charges (2.84)
5381 Amends Table IX, parking during specified hours (Table IX)
5382 Amends §10.24.020, physically disabled persons--parking (10.24)
5385 Amends Ch. 5.12, electrician's license; amends Ch. 16.24, electrical code (5.12, 16.24)
5390 Amends §3.16.020, payments--installments (3.16)
5392 Repeals Ch. 2.52, airport commission; creates Ch. 2.52, board of health (2.52)
5393 Repeals and recreates Ch. 16.28, heating code (16.28)
5399 Amends Ch. 5.20, house movers; amends Ch. 5.22, heating contractor; amends Ch. 15.08, sewer regulations; amends Ch. 16.04, building code (5.20, 5.22, 15.08, 16.04)
5400 Amends Ch. 15.08, sewer regulations; amends Ch. 16.24, electrical code (15.08, 16.24)
5403 Amends Ch. 2.08, city council (2.08)
5409 Amends Table VIII, parking prohibited (Table VIII)
5410 Amends Table VIII, parking prohibited; amends Table IX, parking during specified hours (Table VIII, Table IX)
5414 Amends Ch. 9.32, fireworks and firearms (9.32)
5415 Amends Ch. 3.16, special assessments (3.16)
5418 Repeals and recreates Title 15, sewers and sewerage (Title 15)
5419 Amends Ch. 5.28, alcohol beverages (5.28)
5422 Amends Ch. 9.84, offenses (by or against minors) (9.84)
5427 Amends Ch. 18.30, accessory uses; amends Ch. 18.35, conditional uses re satellite dishes (18.30, 18.35)
5428 Amends Table III, stop intersections; amends Table VIII, parking prohibited (Table III, Table VIII)
5429 Amends Ch. 5.54, vehicles for hire (5.54)
5432 Amends Ch. 5.28, alcohol beverages (5.28)
5433 Amends Ch. 5.28, alcohol beverages (5.28)
5437 Creates §9.32.024, sale to minors (9.32)
5438 Amends §15.08.030, plumbing code (15.08)
5439 Amends Ch. 3.16, special assessments (3.16)
5446 Amends zoning code re manufactured homes (18.02, 18.04, 18.20)
5447 Amends Table XII, parking, stopping and standing prohibited (Table XII)
5449 Creates Ch. 5.58, tattoo facilities, tattoo artists, and the practice of tattooing (5.58)
5454 Amends Ch. 18.04, residential districts; amends Ch. 18.20, special provisions; amends Ch. 18.35, conditions uses re Christmas tree sales (18.04, 18.20, 18.35)
5456 Amends Ch. 2.65, landmarks (2.65)
5458 Creates §8.32.021, mandatory collection of recyclables; amends s. 8.32.180, charge (8.32)

5459 Amends §10.24.020, physically disabled persons--parking; amends Table III, stop intersections (10.24, Table III)
5460 Amends Ch. 14.20, rates and billing (14.20)
5461 Amends §15.04.030, wastewater service charge (15.04)
5466 Amends §2.04.010, reorganization--aldermanic districts--council salaries (2.04 charter ordinance)
5469 Amends Table XIII, parking, stopping and standing prohibited (Table XII)
5470 Creates Ch. 5.60, private communication systems (5.60)
5473 Amends §16.18.070, exceptions and credits, re poster panel signs (16.18)
5480 Amends §3.16.010, special assessments, policy - adopted (3.16)
5482 Amends Table IX, parking during specified hours (Table IX)
5484 Amends Ch. 5.12, electrician's license; amends Ch. 15.08, sewer regulations; amends Ch. 16.04, building code; amends Ch. 16.24, electrical code (5.12, 15.08, 16.04, 16.24)
5485 Amends §5.28.120, licenses--number limited (5.28)
5488 Amends §1.24.030, deposit schedule (1.24)
5492 Repeals Ch. 5.10, dances; repeals Ch. 5.44, circus shows and exhibitions; amends Ch. 8.08, milk regulations; amends Ch. 10.08, bicycles (5.10, 5.44, 8.08, 10.08)
5498 Amends Table IX, parking during specified hours (Table IX)
5506 Amends Table I, speed limits; amends Table VIII, parking prohibited; amends Table IX, parking during specified hours (Tables I, VIII, IX)
5509 Amends §2.08.075, agenda (2.08)
5510 Amends §9.38.015, public school grounds and premises (9.38)
5511 Amends §2.16.020, licenses--payment of taxes and other obligations (2.16)
5521 Creates §2.04.011, city council--duties and responsibilities; creates s. 2.04.012, city manager; qualifications, selection, removal; creates s. 2.04.013, powers of city manager, appointments (2.04)
5522 Repeals and recreates §14.20.050, rates--public fire protection service (14.20)
5524 Amends Table II, through streets; amends Table III, stop intersections; amends Table XII, parking, stopping and standing prohibited (Tables II, III, XII)
5530 Amends §2.08.020, meetings--special (2.08)
5540 Amends Table IX, parking during specified hours; amends Table XII, parking, stopping and standing prohibited (Tables IX, XII)
5549 Creates Ch. 9.30, hunting (9.30)
5551 Amends Table III, stop intersections (Table III)
5552 Amends Table XII, parking, stopping and standing prohibited (Table XII)
5553 Amends Table VIII, parking prohibited (Table VIII)
5554 Amends Table III, stop intersections; amends Table VIII, parking prohibited (Tables III, VIII)
5555 Amends §10.20.100, unmetered parking lots and parking ramps (10.20)
5557 Amends §15.04.030, wastewater service charge (15.04)
5558 Amends Ch. 2.84, cemetery regulations (2.84)
5560 Repeals Ch. 5.04, auctions and auctioneers (5.04)
5565 Amends Ch. 10.42, abandoned motor vehicles (10.42)
5569 Repeals Ch. 2.67, recycling advisory committee (2.67)
5570 Creates Ch. 9.74, camping (9.74)
5571 Amends Ch. 8.32, refuse collection and disposal (8.32)
5575 Amends Table III, stop intersections (Table III)
5576 Amends Table VIII, parking prohibited; amends Table IX, parking during specified hours (Tables VIII, IX)
5577 Amends Ch. 9.82, library materials (9.82)
5578 Amends Ch. 8.32, refuse collection and disposal (8.32)
5580 Repeals §8.32.110, disposal site (8.32)
5584 Amends Ch. 16.04, building code (16.04)
5586 Amends Ch. 5.28, alcohol beverages (5.28)
5589 Amends Table IX, parking during specified hours (Table IX)
5590 Amends Table VII, parking prohibited (Table VII)
5591 Amends Table I, speed limits (Table I)
5596 Amends §17.20.020, major subdivisions--final plat (17.20)
5598 Amends Ch. 8.32, refuse collection and disposal (8.32)
5606 Amends Ch. 6.08, animal control (6.08)
5611 Amends Table VIII, parking prohibited (Table VIII)
5612 Amends Table III, stop intersections (Table III)
5613 Amends Table IX, parking during specified hours (Table IX)
5626 Amends Table IX, parking during specified hours (Table IX)
5627 Amends Table VIII, parking prohibited, Table IX, parking during specified hours, and Table XII, parking, stopping and standing prohibited (Tables VIII, IX, XII)

5628 Amends Table IX, parking during specified hours, and Table XII, parking, stopping and standing prohibited (Tables IX, XII)
5629 Amends §10.24.020, physically disabled persons--parking (10.24)
5630 Amends Table III, stop intersections (Table III)
5642 Amends Table VIII, parking prohibited, and Table XII, parking, stopping and standing prohibited (Tables VIII, XII)
5643 Amends §15.08.045, service outside corporate limits (15.08)
5647 Amends Table XII, parking, stopping and standing prohibited (Table XII)
5648 Amends Table VIII, parking prohibited, Table IX, parking during specified hours, and Table XII, parking, stopping and standing prohibited (Tables VIII, IX, XII)
5651 Amends §8.32.170, collections (8.32)
5652 Creates §2.92.155, cooperative purchasing (2.92)
5658 Amends Ch. 16.24, electrical code (16.24)
5659 Amends Ch. 16.04, building code (16.04)
5660 Amends Table VIII, parking prohibited (Table VIII)
5669 Amends Ch. 8.36, inoperative motor vehicles (8.36)
5670 Creates Title 19, stormwater (19)
5671 Amends Ch. 2.84, cemetery regulations (2.84)
5674 Amends Ch. 16.16, on-premise signs (16.16)
5679 Amends Ch. 14.20, rates and billing (14.20)
5680 Amends Table VIII, parking prohibited (Table VIII)
5681 Amends Table VIII, parking prohibited (Table VIII)
5683 Amends Table IX, parking during specified hours (Table IX)
5684 Amends Ch. 6.10, pet shops and kennels (6.10)
5685 Amends Ch. 9.84, offenses (by or against minors) (9.84)
5686 Amends Ch. 1.24, citations for ordinance violations; amends Ch. 9.56, disorderly conduct--noise (1.24, 9.56)
5687 Amends §5.28.090, operator's license (5.28)
5688 Amends Ch. 2.66, cable television advisory committee (2.66)
5689 Repeals and recreates s. 2.36.110, disposal of abandoned property (2.36)
5693 Amends Table III, stop intersections (Table III)
5695 Amends Table VIII, parking prohibited (Table VIII)
5708 Amends Table IX, parking during specified hours; amends Table XII, parking, stopping and standing prohibited (Table IX, Table XII)
5709 Amends §8.32.170, collections (8.32)
5702 Amends Table VIII, parking prohibited (Table VIII)
5726 Amends Ch. 18.20, special provisions (18.20)
5727 Amends Table VIII, parking prohibited (Table VIII)
5728 Amends Table IX, parking during specified hours (Table IX)
5729 Amends Table IX, parking during specified hours (Table IX)
5733 Amends §2.04.050, appointment to boards and commissions (2.04 charter ordinance)
5734 Amends §2.08.075, agenda (2.08)
5735 Amends §2.08.090, suspension of rules (2.08)
5736 Amends Ch. 10.08, bicycles (10.08)
5737 Amends §1.08.070, destruction of records (1.08)
5739 Amends Table IX, parking during specified hours (Table IX)
5742 Amends Table III, stop intersections (Table III)
5743 Amends Table VIII, parking prohibited (Table VIII)
5744 Repeals and recreates Ch. 9.24, boating regulations; repeals §9.76.160, parks--motor boats (9.24, 9.76)
5745 Amends Ch. 9.76, parks--public grounds; amends Ch. 13.12, street use (9.76, 13.12)
5748 Amends Table IX, parking during specified hours (Table IX)
5749 Amends Table III, stop intersections (Table III)
5757 Amends Ch. 16.16, on-premise signs (16.16)
5760 Amends §9.76.040, speed limits (parks--public grounds) (9.76)
5761 Amends Table III, stop intersections (Table III)
5766 Amends Ch. 16.04, building code; amends Ch. 16.08, housing code (16.04, 16.08)
5767 Amends Table VIII, parking prohibited (Table VIII)
5768 Amends Table III, stop intersections (Table III)
5772 Amends Ch. 6.04, dog and cat licenses (6.04)
5774 Amends §15.04.030, wastewater service change (15.04)
5775 Amends §5.28.120, licenses--number limited (5.28)
5780 Amends Table IX, parking during specified hours (Table IX)

5781 Amends Table VIII, parking prohibited (Table VIII)
5782 Amends Table VIII, parking prohibited (Table VIII)
5783 Amends Table IX, parking during specified hours (Table IX)
5784 Amends Ch. 5.28, alcohol beverages (5.28)
5785 Amends Ch. 18.11, F - floodplain overlay district (18.11)
5786 Amends Table VIII, parking prohibited (Table VIII)
5787 Amends Table IX, parking during specified hours (Table IX)
5791 Amends §3.16.020, payments-installments (special assessments) (3.16)
5792 Amends Ch. 2.08, City Council (2.08)
5794 Amends Table VIII, parking prohibited (Table VIII)
5795 Amends Ch. 3.16, special assessments (3.16)
5798 Amends §6.08.050, mad, vicious, suspicion of rabies--quarantine and/or destruction (6.08)
5800 Amends Table IX, parking during specified hours (Table IX)
5801 Amends Table IX, parking during specified hours (Table IX)
5802 Amends Table VIII, parking prohibited (Table VIII)
5803 Amends Table XII, parking, stopping and standing prohibited (Table XII)
5812 Amends Table VIII, parking prohibited, and Table IX, parking during specified hours (Tables VIII and IX)
5820 Amends Ch. 5.56, massage therapy facilities, massage therapists and the practice of massage therapy (5.56)
5832 Amends Title 18, zoning code (Title 18)
5833 Amends Table IX, parking during specified hours (Table IX)
5834 Amends Table IX, parking during specified hours (Table IX)
5835 Amends §9.84.055, restrictions on purchase or possession of cigarettes or tobacco products (9.84)
5836 Amends Ch. 8.32, refuse collection and disposal (8.32)
5839 Amends §18.20.190, special setbacks (18.20)
5840 Amends §18.20.190, special setbacks (18.20)
5843 Amends §1.08.070, destruction of records (1.08)
5845 Amends §16.16.100, special use signing (16.16)
5849 Amends Table IX, parking during specified hours (Table IX)
5850 Amends Table VIII, parking prohibited (Table VIII)
5851 Amends §3.16.020, payments--installments (special assessments) (3.16)
5658 Amends §16.04.100, permit--general conditions (16.04)
5859 Amends Ch. 5.12, electrician's license, and Ch. 16.24, electrical code (5.12, 16.24)
5860 Amends §9.72.010, bill posting (9.72)
5863 Amends Table VIII, parking prohibited (Table VIII)
5864 Amends §8.20.090, tree maintenance (8.20)
5865 Amends Ch. 5.58, tattoo facilities, tattoo artists, and the practice of tattooing (5.58)
5868 Amends Table VIII, parking prohibited (Table VIII)
5869 Creates §2.84.165, special regulations pertaining to columbaria (2.84)
5872 Amends Title 18, zoning code (18.02, 18.04, 18.06, 18.07, 18.35)
5873 Amends Table III, stop intersections (Table III)
5875 Amends §5.06.030, license--fee (cigarette vendors) (5.06)
5878 Amends Ch. 19.01, stormwater management services (19.01)
5883 Amends Ch. 10.20, parking meters and lots (10.20)
5884 Amends Table III, stop intersections (Table III)
5886 Creates §6.12.015, snakes (6.12)
5890 Amends Table VIII, parking prohibited (Table VIII)
5891 Amends Table XII, parking, stopping and standing prohibited (Table XII)
5892 Amends Table III, stop intersections (Table III)
5893 Amends Table II, through streets (Table II)
5894 Amends Table XI, traffic control signals (Table XI)
5896 Creates §9.84.045, truancy (9.84)
5897 Amends Ch. 1.04, general provisions (1.04)
5899 Amends §8.32.021, mandatory collection of recyclables (8.32)
5903 Amends Title 14, waterworks (14.08, 14.12, 14.20)
5904 Amends §16.32.010, code adopted (16.32)
5905 Amends Table VIII, parking prohibited (Table VIII)
5906 Amends Table IX, parking during specified hours (Table IX)
5907 Amends Table XII, parking, stopping and standing prohibited (Table XII)
5907 Amends §10.20.080, meters--parking lots, ramps and streets (10.20)
5914 Amends §10.20.100, unmetered parking lots and parking ramps (10.20)
5915 Amends §3.16.010, policy--adopted (special assessments) (3.16)

5916 Amends Table III, stop intersections (Table III)
5917 Amends §5.56.055, applicability (massage therapy facilities, massage therapists and the practice of massage therapy) (5.56)
5919 Amends Ch. 8.32, refuse collection and disposal (8.32)
5920 Amends §2.84.160, fees and charges (cemeteries) (2.84)
5928 Amends Ch. 8.32, refuse collection and disposal (8.32)
5929 Amends Table IX, parking during specified hours (Table IX)
5930 Amends §3.16.010, policy--adopted (special assessments) (3.16)
5931 Amends Ch. 2.64, city waterways and parks commission (2.64)
5933 Amends Ch. 16.16, on-premise signs (16.16)
5934 Amends Table IX, parking during specified hours (Table IX)
5935 Amends §2.04.010, reorganization--aldermanic districts--council salaries (2.04)
5939 Amends Table I, speed limits (Table I)
5940 Amends Table VIII, parking prohibited (Table VIII)
5941 Amends Table IX, parking during specified hours (Table IX)
5943 Amends §18.65.060, community living arrangements-special zoning permission; distance exception (18.65)
5944 Amends §5.54.040, insurance coverage (vehicles for hire) (5.54)
5951 Amends Ch. 19.01, stormwater management services (19.01)
5952 Creates §16.04.285, structures listed on the national or state register of historic places (16.04)
5953 Creates Ch. 8.07, nude dancing in licensed establishments (8.07)
5954 Amends Ch. 5.26, cabaret license (5.26)
5955 Amends Title 18, zoning code (18.02, 18.05, 18.20)
5958 Amends Ch. 18.50, administration and enforcement (18.50)
5959 Amends Table VIII, parking prohibited (Table VIII)
5963 Amends §16.08.165, housing appearance (16.08)
5964 Amends §17.24.020, methods of financing (improvements-subdivisions) (17.24)
5967 Amends Table III, stop intersections (Table III)
5968 Amends Table VIII, parking prohibited (Table VIII)
5969 Amends Table VIII, parking prohibited (Table VIII)
5970 Amends Table I, speed limits (Table I)
5973 Amends §18.20.200, adult book store or adult cabaret (18.20)
5978 Amends Table IX, parking during specified hours (Table IX)
5979 Amends Table IX, parking during specified hours (Table IX)
5980 Amends Table IX, parking during specified hours (Table IX)
5981 Amends Table VIII, parking prohibited (Table VIII)
5985 Amends Table VIII, parking prohibited (Table VIII)
5996 Amends §8.32.021, mandatory collection of recyclables (8.32)
5997 Amends §10.24.020, physically disabled persons - parking (10.24)
5998 Amends Table I, speed limits (Table I)
5999 Amends Table I, speed limits (Table I)
6000 Amends Table XII, parking, stopping and standing prohibited (Table XII)
6001 Amends Table VIII, parking prohibited (Table VIII)
6002 Amends Table VIII, parking prohibited (Table VIII)
6003 Amends Table VIII, parking prohibited (Table VIII)
6005 Amends §10.20.100, unmetered parking lots and parking ramps (10.20)
6006 Creates §2.36.095, fingerprinting; fee (2.36)
6009 Amends §2.84.160, fees and charges (2.84)
6012 Amends §8.40.020, storm sewers--prohibited material (8.40)
6015 Amends §2.48.020, sessions (board of review) (2.48)
6016 Creates §2.48.030, confidentiality of financial information (board of review) (2.48)
6018 Amends §5.28.110, license fees (intoxicating liquor) (5.28)
6019 Creates ch. 8.05, smoking prohibited in indoor areas of restaurants (8.05)
6020 Amends §16.32.015, burning permits (16.32)
6021 Amends Table III, stop intersections (Table III)
6022 Amends Table III, stop intersections (Table III)
6023 Amends Table VIII, parking prohibited (Table VIII)
6024 Amends Table IX, parking during specified hours (Table IX)
6025 Amends Table VIII, parking prohibited, and Table IX, parking during specified hours (Tables VIII and IX)
6034 Amends §1.16.010, general code penalty (1.16)
6035 Amends ch. 2.92, city procurement (2.92)
6042 Amends Table IX, parking during specified hours (Table IX)

6043 Amends §2.60.020, membership--terms--qualifications, amends s. 2.60.040, meetings (2.60 charter ordinance)
6045 Amends Table III, stop intersections (Table III)
6046 Amends Table VIII, parking prohibited (Table VIII)
6051 Repeals and recreates Title 4, cable television (Title 4)
6057 Amends Table VIII, parking prohibited (Table VIII)
6058 Amends Table VIII, parking prohibited (Table VIII)
6059 Amends Table VIII, parking prohibited (Table VIII)
6060 Amends Table XII, parking, stopping and standing prohibited (Table XII)
6061 Amends Table III, stop intersections (Table III)
6062 Amends Table III, stop intersections (Table III)
6065 Amends Table III, stop intersections (Table III)
6066 Amends Table XII, parking, stopping and standing prohibited (Table XII)
6067 Amends Table I, speed limits (Table I)
6068 Amends Table VIII, parking prohibited (Table VIII)
6074 Amends Table III, stop intersections (Table III)
6075 Amends Table VIII, parking prohibited (Table VIII)
6084 Amends Table III, stop intersections (Table III)
6085 Amends Table III, stop intersections (Table III)
6086 Amends Table II, through streets (Table II)
6087 Amends Table IX, parking during specified hours (Table IX)
6088 Amends Table VIII, parking prohibited (Table VIII)
6089 Amends Table XII, parking, stopping and standing prohibited (Table XII)
6090 Amends ch. 1.24, citations for ordinance violations (1.24)
6094 Amends Table VIII, parking prohibited (Table VIII)
6095 Amends §10.24.020, physically disabled persons--parking (10.24)
6103 Creates §1.04.065, reorganization and modernization of chapter 66 of the Wisconsin Statutes (1.04)
6109 Amends Table IX, parking during specified hours (Table IX)
6110 Amends Table VIII, parking prohibited (Table VIII)
6111 Amends ch. 5.42, pool halls, billiard halls and bowling alleys (5.42)
6112 Amends §5.28.060, license--abandonment or non-use (5.28)
6113 Amends ch. 6.12, keeping certain animals (6.12)
6116 Amends Table XII, parking, stopping and standing prohibited (Table XII)
6117 Amends Table IX, parking during specified hours (Table IX)
6118 Amends Table VIII, parking prohibited (Table VIII)
6119 Amends Table III, stop intersections (Table III)
6120 Amends Table III, stop intersections (Table III)
6121 Amends Table VI, one way streets and alleys (Table VI)
6122 Amends Table I, speed limits (Table I)
6123 Amends Table I, speed limits (Table I)
6127 Amends §10.40.180, bus transfer station (10.40)
6128 Amends Table XII, parking, stopping and standing prohibited (Table XII)
6131 Amends ch. 14.20, rates and billing (14.20)
6132 Amends ch. 2.84, cemetery regulations (2.84)
6133 Amends ch. 8.32, refuse collection and disposal; amends ch. 16.08, housing code (8.32, 16.08)
6136 Amends Table XII, parking, stopping and standing prohibited (Table XII)
6137 Amends Table VIII, parking prohibited (Table VIII)
6138 Amends Table III, stop intersections (Table III)
6142 Amends Table III, stop intersections (Table III)
6143 Amends Table III, stop intersections (Table III)
6144 Amends Table VIII, parking prohibited (Table VIII)
6147 Amends Table III, stop intersections (Table III)
6155 Amends Table XII, parking, stopping and standing prohibited (Table XII)
6158 Amends Table VIII, parking prohibited (Table VIII)
6159 Amends §5.28.060, license--abandonment or non-use (5.28)
6161 Amends §13.12.025, skateboards, roller skates, roller skis, in-line skates or similar equipment (s. 13.12)
6162 Amends §9.84.055, restrictions on purchase or possession of cigarettes or tobacco products (9.84)
6163 Amends ch. 5.12, electrician's license; amends ch. 16.24, electrical code (5.12, 16.24)
6164 Amends ch. 16.04, building code (16.04)
6165 Amends ch. 16.28, heating code (16.28)

6166 Amends ch. 5.22, heating contractor (5.22)
6167 Amends ch. 15.08, sewer regulations (15.08)
6173 Amends §10.24.020, physically disabled persons--parking (10.24)
6178 Amends Table III, stop intersections (Table III)
6179 Amends Table VIII, parking prohibited (Table VIII)
6181 Amends §2.04.010, reorganization--aldermanic districts--council salaries (2.04 charter ordinance)
6184 Amends Title 18, zoning code (Title 18)
6192 Amends §18.02.020, definitions (zoning code) (18.02)
6194 Amends Table III, stop intersections (Table III)
6195 Amends Table III, stop intersections (Table III)
6196 Amends Table III, stop intersections (Table III)
6197 Amends Table III, stop intersections (Table III)
6198 Amends Table III, stop intersections (Table III)
6199 Amends Table VIII, parking prohibited (Table VIII)
6200 Amends §10.24.010, parking prohibited in specific places (10.24)
6201 Amends Table VIII, parking prohibited (Table VIII)
6202 Amends Table VIII, parking prohibited (Table VIII)
6203 Amends Table XII, parking, stopping and standing prohibited (Table XII)
6203 Amends Table IX, parking during specified hours (Table IX)
6205 Amends Table XII, parking, stopping and standing prohibited (Table XII)
6206 Amends Table VIII, parking prohibited (Table VIII)
6207 Amends Table VIII, parking prohibited (Table VIII)
6211 Amends Title 17, subdivisions (17)
6212 Amends Title 14, waterworks; Title 15, sewers and sewerage; Title 19, stormwater (14, 15, 19)
6213 Amends §9.84.045, truancy (9.84)
6214 Amends ch. 2.92, city procurement (2.92)
6218 Amends §18.02.020, definitions (zoning code) (18.02)
6219 Amends §1.24.030, deposit schedule (1.24)
6220 Amends §9.56.075, loud parties or gatherings (9.56)
6221 Amends Table VIII, parking prohibited (Table VIII)
6222 Amends Table VIII, parking prohibited (Table VIII)
6225 Amends Table XII, parking, stopping and standing prohibited (Table XII)
6227 Amends Table III, stop intersections (Table III)
6228 Amends Table II, through streets (Table II)
6233 Amends ch. 5.20, house movers; ch. 5.24, junk dealer; ch. 5.28, alcohol beverages; ch. 5.52, tree trimmer; ch. 5.54, vehicles for hire; ch. 5.56, massage therapy facilities, massage therapists and the practice of massage therapy (5.20; 5.24; 5.28; 5.52; 5.54; 5.56)
6234 Amends ch. 8.32, refuse collection and disposal (8.32)
6235 Amends ch. 9.04, false alarms (9.04)
6236 Amends ch. 9.32, fireworks and firearms (9.32)
6237 Amends ch. 10.44, penalties for traffic violations (10.44)
6238 Amends ch. 15.08, sewer regulations (15.08)
6239 Amends ch. 16.04, building code (16.04)
6240 Amends ch. 16.16, on-premise signs (16.16)
6241 Amends ch. 16.24, electrical code (16.24)
6242 Amends ch. 16.28, heating, ventilating, and air conditioning (HVAC) code (16.28)
6243 Amends §17.20.070, fees (subdivision code) and s. 18.50.080, fees (zoning code) (17.20; 18.50)
6246 Amends Table XII, parking, stopping and standing prohibited (Table XII)
6247 Amends Table XII, parking, stopping and standing prohibited (Table XII)
6249 Amends Table III, stop intersections (Table III)
6250 Amends Table IX, parking during specified hours (Table IX)
6252 Amends Table XII, parking, stopping and standing prohibited (Table XII)
6253 Amends Table XII, parking, stopping and standing prohibited (Table XII)
6254 Repeals and recreates Chapter 9.36, nuisances (9.36)
6258 Amends ch. 2.84, cemetery regulations (2.84)
6260 Amends Table III, stop intersections (Table III)
6261 Amends ch. 3.16, special assessments (3.16)
6263 Creates ch. 18.14, TND-traditional neighborhood development (18.14)
6264 Amends Table VIII, parking prohibited (Table VIII)
6270 Amends Table XII, parking, stopping and standing prohibited (Table XII)
6272 Creates ch. 10.48, truck traffic regulations (10.48)
6273 Amends ch. 10.44, penalties for traffic violations (10.44)

6274 Amends ch. 9.36, public nuisance (9.36)
6277 Amends Table III, stop intersections (Table III)
6278 Amends Table III, stop intersections (Table III)
6284 Amends Table XII, parking, stopping and standing prohibited (Table XII)
6285 Amends §13.04.010, installation of sidewalks--general; amends §17.12.280, sidewalks--plats approved after November 1, 1974 (13.04, 17.12)
6291 Amends Table III, stop intersections (Table III)
6297 Amends Table III, stop intersections (Table III)
6298 Amends Table III, stop intersections (Table III)
6299 Amends Table V, yield intersections (Table V)
6300 Amends Table VII, left turns prohibited (Table VII)
6301 Amends Table XII, parking, stopping and standing prohibited (Table XII)
6302 Amends §1.24.030, deposit schedule (1.24)
6303 Creates ch. 9.37, possession of marijuana (9.37)
6304 Creates ch. 9.61, trespass (9.61)
6305 Creates ch. 9.62, retail theft; repeals §9.84.075, juvenile shoplifting (9.62, 9.84)
6306 Creates ch. 9.63, damage to property (9.63)
6308 Amends Table III, stop intersections (Table III)
6313 Amends Table VIII, parking prohibited (Table VIII)
6314 Creates §8.32.215, screening of refuse containers on commercial property (8.32)
6315 Amends Table III, stop intersections (Table III)
6316 Amends Table III, stop intersections (Table III)
6320 Creates ch. 16.38, airport building and construction standards (16.38)
6321 Deletes §8.32.215, screening of refuse containers on commercial property (8.32)
6325 Amends Table VIII, parking prohibited (Table VIII)
6326 Amends Table IX, parking during specified hours (Table IX)
6327 Amends Table IX, parking during specified hours (Table IX)
6328 Amends Table IX, parking during specified hours (Table IX)
6329 Amends Table IX, parking during specified hours (Table IX)
6330 Amends §2.20.020, officials (election) (2.20)
6346 Amends Table XII, parking, stopping and standing prohibited (Table XII)
6347 Amends Table IX, parking during specified hours (Table IX)
6348 Amends Table XII, parking, stopping and standing prohibited (Table XII)
6349 Amends ch. 8.16, food service establishments (8.16)
6353 Amends Table I, speed limits (Table I)
6354 Amends Table III, stop intersections (Table III)
6355 Amends Table VIII, parking prohibited (Table VIII)
6356 Amends Table XII, parking, stopping and standing prohibited (Table XII)
6357 Amends Table VIII, parking prohibited (Table VIII)
6362 Amends ch. 16.08, housing code (Ch. 16.08)
6363 Amends various and sundry provisions of the code pertaining to fees for licenses, permits, and miscellaneous city services (Various)
6372 Amends §10.24.020, physically disabled persons--parking (10.24)
6373 Amends Table III, stop intersections (Table III)
6374 Amends Table VIII, parking prohibited (Table VIII)
6375 Amends Table IX, parking during specified hours (Table IX)
6380 Amends Table VIII, parking prohibited (Table VIII)
6381 Amends Table IX, parking during specified hours (Table IX)
6389 Amends §16.16.080, provisions for signs by zoning district (16.16)
6403 Amends Table VIII, parking prohibited (Table VIII)
6408 Creates §13.12.065, sidewalk cart food vendors (13.12)
6413 Amends Table I, speed limits (Table I)
6414 Amends Table VIII, parking prohibited (Table VIII)
6421 Amends ch. 14.20, (waterworks) rates and billing (14.20)
6424 Amends Table XII, parking, stopping and standing prohibited (Table XII)
6425 Amends Table IX, parking during specified hours (Table IX)
6427 Amends Table VIII, parking prohibited (Table VIII)
6428 Amends Table IX, parking during specified hours (Table IX)
6429 Amends Table XII, parking, stopping and standing prohibited (Table XII)
6436 Amends Table IX, parking during specified hours (Table IX)
6437 Amends Table IX, parking during specified hours (Table IX)

6438 Creates ch. 10.09, motor scooters; amends ch. 9.76, parks--public grounds; amends ch. 10.04, state statutes adopted; amends ch. 10.44, penalties for traffic violations; amends ch. 13.12, street use (10.09, 9.76, 10.04, 10.44, 13.12)
6445 Amends ch. 16.18, poster panel signs (16.18)
6446 Amends Table VIII, parking prohibited (Table VIII)
6447 Amends Table VIII, parking prohibited (Table VIII)
6448 Amends Table VIII, parking prohibited (Table VIII)
6449 Amends Table XI, traffic control signals (Table XI)
6450 Amends Table III, stop intersections (Table III)
6452 Amends Table II, through streets (Table II)
6453 Amends Table VIII, parking prohibited (Table VIII)
6454 Amends Table VIII, parking prohibited (Table VIII)
6457 Amends Table III, stop intersections (Table III)
6458 Amends Table XII, parking, stopping and standing prohibited (Table XII)
6459 Creates ch. 5.04, pawnbrokers (Ch. 5.04)
6461 Amends ch. 18.10, PD - planned development (18.10)
6462 Amends s. 15.04.030, water service charge (15.04)
6465 Amends ch. 8.36, inoperative motor vehicles (8.36)
6466 Amends s. 9.52.040, consumption of alcohol beverages or possession of open containers in city buildings, public parking lots and public parking ramps (9.52)
6467 Amends ch. 9.56, disorderly conduct (9.56)
6468 Amends ch. 1.24, citations for ordinance violations (1.24)
6469 Amends s. 1.24.040, issuance of citations (1.24)
6477 Creates s. 13.12.055, dumpsters and roll-off boxes in the public right-of-way (13.12)
6478 Amends Table I, speed limits (Table I)
6479 Amends Table III, stop intersections (Table III)
6480 Amends Table VIII, parking prohibited (Table VIII)
6482 Amends ch. 5.22, heating, ventilating, and air conditioning (HVAC) contractor (5.22)
6483 Amends ch. 8.40, miscellaneous sanitary regulations, and ch. 16.28, heating code (8.40, 16.28)
6484 Amends ch. 16.04, building code (16.04)
6485 Amends s. 16.24.150, wiring methods and installations (16.24)
6487 Amends Table IX, parking during specified hours (Table IX)
6488 Amends Table VIII, parking prohibited (Table VIII)
6501 Amends Table IX, parking during specified hours (Table IX)
6507 Amends Table III, stop intersections (Table III)
6513 Amends Table III, stop intersections (Table III)
6514 Amends Table IX, parking during specified hours (Table IX)
6515 Amends Table IX, parking during specified hours (Table IX)
6516 Amends ch. 10.24, special parking restrictions (10.24)
6517 Amends Table XI, traffic control signals (Table XI)
6518 Amends Table XII, parking, stopping and standing prohibited (Table XII)
6520 Amends ch. 3.16, special assessments (3.16)
6523 Amends s. 18.20.190, special setbacks (18.20)
6525 Amends ch. 9.24, boating regulations (9.24)
6528 Amends Table III, stop intersections (Table III)
6529 Amends Table VIII, parking prohibited (Table VIII)
6532 Amends Table III, stop intersections (Table III)
6533 Amends Table III, stop intersections (Table III)
6534 Amends Table III, stop intersections (Table III)
6535 Amends s. 10.40.130, parking citations; amends s. 10.44.070, late payment penalty (10.40, 10.44)
6536 Amends Table III, stop intersections (Table III)
6538 Amends ch. 16.16, on-premise signs (16.16)
6541 Amends Table VIII, parking prohibited (Table VIII)
6544 Amends Table II, through streets (Table II)
6545 Amends s. 9.30.020, hunting on city property; amends s. 9.32.030, discharging firearms (9.30, 9.32)
6548 Amends Table XII, parking, stopping and standing prohibited (Table XII)
6549 Amends Table IX, parking during specified hours (Table IX)
6553 Creates ch. 5.62, weights and measures (5.62)
6557 Amends Table III, stop intersections (Table III)
6558 Amends Table IX, parking during specified hours (Table IX)
6559 Amends Table IX, parking during specified hours (Table IX)

6560 Amends ch. 9.24, boating regulations (9.24)
6565 Amends Table IX, parking during specified hours (Table IX)
6566 Amends Table VIII, parking prohibited (Table VIII)
6567 Creates ch. 1.06, review of administrative determinations (1.06)
6571 Amends s. 9.24.060, Chippewa River--placement of buoys and markers (9.24)
6572 Amends various provisions relating to administrative appeal procedures (1.06, 2.16, 5.24, 5.26, 5.28, 5.34, 5.42, 5.46, 5.48, 5.52, 5.54, 5.56, 5.60, 6.08, 8.16, 8.20, 8.32, 16.28)
6579 Amends s. 1.06.030, determinations subject to review; creates ch. 9.58, block party (1.06, 9.58)
6580 Amends ch. 16.08, rooming houses (16.08)
6585 Amends Table VIII, parking prohibited (Table VIII)
6586 Amends s. 1.06.030, determinations subject to review; creates s. 13.12.062, sidewalk cafe permit (1.06, 13.12)
6587 Creates s. 5.28.037, sidewalk cafes (alcohol beverages) (5.28)
6590 Amends ch. 16.16, on-premise signs; amends ch. 16.18, poster panel signs (16.16, 16.18)
6592 Amends s. 1.06.030, determinations subject to review; creates ch. 9.59, special events (1.06, 9.59)
6593 Amends s. 1.06.030, determinations subject to review; creates ch. 9.60, assemblies and parades (1.06, 9.60)
6597 Amends Table XI, traffic control signals (Table XI)
6598 Amends Table III, stop intersections (Table III)
6599 Amends Table VIII, parking prohibited (Table VIII)
6600 Repeals ch. 2.66, cable television advisory committee (2.66)
6601 Amends s. 2.04.010, reorganization--aldermanic districts--council salaries (2.04)
6606 Amends s. 1.08.090, preservation through microfilm (public records) (1.08)
6607 Creates ch. 5.63, minimum wage (5.63)
6613 Amends Table VIII, parking prohibited (Table VIII)
6614 Amends Table III, stop intersections (Table III)
6615 Amends Table III, stop intersections (Table III)
6616 Amends Table V, yield intersections (Table V)
6617 Amends s. 9.56.070, prohibition of noises disturbing the peace (9.56.070)
6619 Amends Table II, through streets (Table II)
6620 Amends Table VIII, parking prohibited (Table VIII)
6621 Amends Table IX, parking during specified hours (Table IX)
6625 Repeals and recreates s. 9.84.010, hours prohibited in public (minors) (9.84.010)
6627 Amends ch. 16.16, on-premise signs (16.16)
6631 Amends Table III, stop intersections (Table III)
6632 Amends Table VIII, parking prohibited (Table VIII)
6633 Amends Table IX, parking during specified hours (Table IX)
6634 Amends Table XII, parking, stopping and standing prohibited (Table XII)
6635 Amends Table XII, parking, stopping and standing prohibited (Table XII)
6639 Amends Table III, stop intersections (Table III)
6640 Amends Table III, stop intersections (Table III)
6644 Amends Table IX, parking during specified hours (Table IX)
6653 Amends ch. 10.24, special parking restrictions (10.24)
6654 Amends Table VIII, parking prohibited (Table VIII)
6655 Amends Table IX, parking during specified hours (Table IX)
6656 Amends ch. 10.24, special parking restrictions (10.24)
6657 Amends Table VIII, parking prohibited (Table VIII)
6658 Amends Table VIII, parking prohibited (Table VIII)
6659 Amends Table III, stop intersections (Table III)
6660 Amends Table IX, parking during specified hours (Table IX)
6661 Amends Table III, stop intersections (Table III)
6662 Amends Table III, stop intersections (Table III)
6669 Amends ch. 10.44, penalties for traffic violations (10.44)
6670 Creates ch. 9.35, occupancy (9.35)
6672 Amends ch. 18.30, accessory uses, and ch. 18.35, conditional uses (18.30, 18.35)
6673 Repeals ch. 2.44, board of education, ch. 8.08, milk regulations, ch. 8.12, meat slaughter and sale, and title 11, airport (2.44, 8.08, 8.12, title 11)
6675 Amends ch. 8.28, weeds, yards, and lawns (8.28)
6681 Amends ch. 16.16, on-premise signs (16.16)
6682 Amends ch. 18.45, site plans (18.45)
6683 Amends ch. 18.05, commercial districts, ch. 18.06, industrial districts, ch. 18.35, conditional uses (18.05, 18.06, 18.35)

6684 Amends ch. 10.44, penalties for traffic violations (10.44)
6685 Amends ch. 16.36, standards for public and private development, ch. 18.04, residential districts, and ch. 18.25, off-street parking and loading requirements (16.36, 18.04, 18.25)
6691 Amends s. 9.32.024, fireworks and firearms, sale to minors (9.32)
6692 Creates ch. 2.66, bicycle/pedestrian advisory commission (2.66)
6693 Amends ch. 18.55, board of appeals (18.55)
6696 Amends Table VIII, parking prohibited (Table VIII)
6697 Amends Table VIII, parking prohibited (Table VIII)
6698 Amends Table III, stop intersections (Table III)
6703 Creates s. 6.08.045, dangerous dogs; amends s. 6.08.050, mad, vicious, suspicion of rabies--quarantine and/or destruction (6.08)
6706 Amends s. 13.12.065, sidewalk cart food vendors (13.12)
6708 Amends Table VIII, parking prohibited (Table VIII)
6709 Amends Table IX, parking during specified hours (Table IX)
6711 Amends ch. 14.20, (waterworks) rates and billing (14.20)
6712 Amends s. 13.12.055, dumpsters and roll-off boxes in the public right-of-way (13.12)
6713 Creates ch. 9.65, graffiti (9.65)
6721 Amends ch. 16.08, housing code (16.08)
6731 Repeals and recreates s. 18.40.030, nonconforming structures; amends s. 18.40.050, applicability (18.40)
6735 Repeals and recreates ch. 18.11, F -- floodplain overlay district (18.11)
6736 Amends Table II, through streets (Table II)
6737 Amends Table III, stop intersections (Table III)
6738 Amends Table VIII, parking prohibited (Table VIII)
6739 Amends s. 15.08.040, connection to sanitary sewer (15.08)
6740 Amends s. 14.04.025, rules and regulations--general (14.04)
6746 Amends ch. 1.06, review of administrative determinations, and ch. 5.04, pawnbrokers (1.06, 5.04)
6754 Amends s. 18.02.020, definitions, and s. 18.35.050, conditional uses (catering businesses) (18.02, 18.35)
6755 Amends s. 9.76.165, parks--intoxicants and s. 9.76.100, parks--commercial enterprises (9.76)
6760 Amends ch. 8.32, refuse collection and disposal (8.32)
6762 Amends s. 18.25.020, general provision, and s. 18.25.030, off-street parking requirements (18.25)
6763 Amends Table I, speed limits (Table I)
6764 Amends Table III, stop intersections (Table III)
6765 Amends Table VIII, parking prohibited (Table VIII)
6766 Amends Table IX, parking during specified hours (Table IX)
6776 Creates ch. 10.10, neighborhood electric vehicles (10.10)
6782 Amends Table VIII, parking prohibited (Table VIII)
6784 Amends s. 17.20.040, plats within the extraterritorial plat approval jurisdiction (17.20)
6785 Amends Table VIII, parking prohibited (Table VIII)
6791 Amends Table III, stop intersections, and Table V, yield intersections (Table III, Table V)
6792 Amends Table III, stop intersections (Table III)
6793 Amends Table II, through streets (Table II)
6796 Amends Table IX, parking during specified hours, and Table VIII, parking prohibited (Table IX, Table VIII)
6797 Amends Table III, stop intersections (Table III)
6798 Amends Table IX, parking during specified hours, and Table VIII, parking prohibited (Table IX, Table VIII)
6799 Amends Table VIII, parking prohibited (Table VIII)
6800 Amends ch. 15.04, sewerage service charge (15.04)
6803 Amends Table IX, parking during specified hours (Table IX)
6809 Amends ch. 16.16, on-premise signs (16.16)
6811 Amends Table III, stop intersections (Table III)
6815 Amends ch. 10.10, neighborhood electric vehicles (10.10)
6819 Repeals and re-creates ch. 8.05, smoking prohibited in indoor areas of restaurants (8.05)
6824 Amends s. 2.04.010, reorganization--aldermanic districts—council salaries (2.04 charter ordinance)
6830 Amends s. 16.16.080, provisions for signs by zoning district (16.16)
6839 Amends ch. 16.32, fire prevention code (16.32)
6840 Amends s. 2.16.040, issuance of certain licenses and permits (2.16)
6841 Amends ch. 5.04, pawnbrokers (5.04)

6842 Amends ch. 5.56, massage therapy facilities, massage therapists and the practice of massage therapy (5.56)
6843 Amends s. 10.12.060, removal of unlawfully parked vehicles (10.12)
6848 Amends Title 14, waterworks (14.04)
6850 Amends Table II, through streets (Table II)
6851 Amends Table XI, traffic control signals (Table XI)
6853 Amends ch. 1.24, citations for ordinance violations, and ch. 9.36, public nuisance (1.24, 9.36)
6856 Amends Title 17, subdivisions (Title 17)
6857 Amends ch. 3.20, room tax (3.20)
6859 Creates ch. 1.25, enforcement--orders--inspections (1.25)
6860 Amends ch. 15.04, sewerage service charge (15.04)
6864 Creates ch. 18.18, hotel & motel guest registration (18.18)
6865 Amends ch. 8.04, contagious disease (8.04)
6867 Amends ch. 18.11, F-floodplain overlay district (18.11)
6870 Amends s. 17.24.020, methods of financing (17.24.020)
6871 Amends ch. 16.18, poster panel signs (16.18)
6876 Amends ch. 14.20 (waterworks) rates and billing (14.20)
6880 Creates s. 8.28.102, boulevard planting, care, and maintenance (8.28)
6884 Amends Table VIII, parking prohibited and Table IX, parking during specified hours (Table VIII and Table IX)
6885 Amends Table VIII, parking prohibited and Table IX, parking during specified hours (Table VIII and Table IX)
6892 Creating s. 16.18.045, lease of city-owned property and amends s. 16.18.060, general provisions (16.18)
6893 Creating ch. 16.26, outdoor lighting and amends s. 18.45.050 review criteria (18.45)
6896 Amends ch. 18.10, pd planned development and ch. 18.45.030, site plans by zoning (18.10, 18.45)
6899 Amends ch. 15.04, Sewerage Service Charge (15.04)
6901 Amends ch. 10.20.100, unmetered parking lots and parking ramps (10.20)
6950 Amending ch 18.02, Definitions, adding definition for tavern (18.02)
6951 Amending s. 16.04.350 Special Building District Boundaries (16.04)
6953 Failed - Amending s. 6.08.020, (6.08)
6954 Withdrawn - Amend Table VIII, Parking Prohibited (Table VIII)
6955 Amending Table VIII, Parking Prohibited (Table VIII)
6956 Amending ch 16.16, On-premise Sign Code (16.16)
6957 Amending ch 16.16 On-premise Sign Code (16.16)
6965 Amending s. 16.16.070, Sign Code commercial attractions (16.16.70)
6975 Amends Table III, Stop Intersections (Table III)
6976 Failed – Creating Chapter 6.17, Educational Hen Keeping Initiative amended-Denied
6983 Amends ch. 14, Waterworks (14.20)
6980 Amends s. 2.04.010, reorganization—aldermanic districts—council salaries (2.04 charter ordinances)
6983 Amends Title 14, Waterworks (14.20)
6884 Repeals and re-creates s. 9.32.040, Possession of Firearms-Public Buildings, Business Establishments and Public Areas (9.32)
6985 Amends Table VIII, Parking Prohibited (Table VIII)
6987 Amends ch. 15.04, Sewerage Service Charge (15.04)
6989 Amends ch. 16.16, On-premise Sign Code (16.16)
6990 Amends s. 2.04.010, reorganization—aldermanic districts—council salaries (2.04 charter ordinances)
6992 Amends s. 17.20.040, Plats within the Extraterritorial Plat Approval (Title 17)
6993 Amends s. 18.06.030, Establishment of Uses (18.06)
6997 Amends Table VIII, Parking Prohibited (Table VIII)
6999 Creating ch. 18.15, MX Mixed-use Development Overlay District (18.15)
7002 Repeals and re-creates ch. 5.56, Massage Therapy and the Practice of Massage Therapy (Title 5.56)
7003 Amends s. 17.20.040, plats within the extraterritorial plat approval jurisdiction (17.20)
7006 Amending ch 16.16, On-premise Sign Code (16.16)
7009 Amends s. 2.04.010, reorganization—aldermanic districts—council salaries (2.04 charter ordinances)
7010 Repeals and re-creates ch. 8.32, Management of Waste and Recyclables (Title 8)
7014 Amends Table III, Stop Intersections (Table III)
7015 Amends s. 2.04.010, reorganization—aldermanic districts—council salaries (2.04 charter

ordinances)
7018 Amending ch 16.16, On-premise Sign Code (16.16)
7020 Amends s. 18.25, off-street parking requirements; creates s. 18.25.031, bicycle parking requirements (18.25)
7023 Amends ch. 15.04, sewerage service charge (15.04)
7030 Amends s. 1.06.030, Determinations subject to review and s. 5.28.020, license application-inspection and report (1.06, 5.28)
7031 Amends ch. 6.08, Animal control, and ch. 6.12, Keeping certain animals; (6.08, 6.12)
7035 Amends Table III, Stop Intersections (Table III)
7036 Amends Table III, Stop Intersections (Table III)
7037 Amends s. 3.16.020, Payments-Installments (3.16)
7038 Amends s. 15.04.040, Charges based upon water consumption (15.04)
7039 Amends s. 10.40.070, Wisconsin State College Grounds (10.40)
7042 Amends ch. 16.32, Fire Prevention Code, creates s. 16.32.017, Fire Performances (16.32)
7043 Amends s. 9.76.110, Parks-Hazardous activities prohibited (9.76)
7044 Amends ch. 14, Waterworks (14.20)
7051 Amends ch. 18.35, Conditional Uses, ch 18.55, Board of Appeals, ch. 18.65 Amendments and rezoning (18.35, 18.55, 18.65)
7052 Amends s. 16.28.230, Heating, ventilating and Air Conditioning (HVAC) (16.28)
7054 Amends s. 2.72.010, Pay Plan Adopted (2.72)
7055 Amends s. 2.72.020, Employment Code, amends s. 2.72.050, Amendments (2.72)
7057 Amends s. 16.16.070 and 16.16.080, Changing signs and Signs in Residential Districts (16.16)
7058 Amends ch. 16.16, On-premise Sign Code (16.16)
7059 Amends Table IX, parking during specified hours (Table IX)
7062 Amends ch. 19, Stormwater (s. 19.01.040, 19.01.050, 19.01.080, 19.01.090, and 19.01.120)
7064 Amends s. 2.04.040, City Departments (Denied-charter ordinance 2.04)
7067 Amends s. 6.08.045, Dangerous Dogs (6.08.045)
7068 Amending ch. 18.15, MX Mixed-use Development Overlay District (18.15)
7070 Amends s. 2.60.020, Membership-Terms—Qualifications and s. 2.60.030 Powers and Duties (ch. 2.60 charter ordinances)
7072 Amends ch. 15.04, sewerage service charge (15.04)
7073 Amends s. 2.72.010, Pay Plan Adopted (2.72)
7074 Amends s. 2.72.020, City of Eau Claire Employee Benefits and Leaves Plan (2.72.020)
7077 Creates ch. 2.06 Advisory Commission on Sustainability, (ch.2.06)
7079 Amends s. 18.45.020, site plans (18.45.020)
7080 Denied Charter Ord requiring certain building projects more than $1,000,000 be submitted to referendum
7081 Amends Table VIII, parking prohibited (Table VIII)
7082 Amends Table VIII, parking prohibited (Table VIII)
7083 Amends ch. 18.11, floodplain overlay district (ch. 18.11)
7084 Amends ch 2.06, Advisory Commission on Appointments (ch. 2.06)
7085 Amends ch. 14, Waterworks (ch. 14)
7086 Amends Table VIII, parking prohibited (Table VIII)
7087 Amends Table VIII, parking prohibited (Table VIII)
7088 Amends Table VIII, parking prohibited (Table VIII)
7090 Amends ch.18.20 and 18.45 Site plans (Ch 18.20, 18.45)
7093 Failed Table VIII, parking prohibited (Table VIII)
7094 Amends ch. 9.38, Smoking (s. 9.38.010, 9.38.012, and 9.38.015)
7100 Amends ch 9.16, Fair Housing (9.16)
7101 Amends ch. 9.32.030, Discharging Firearms (s. 9.32)
7102 Amends Table IX, parking during specified hours (Table IX)
7103 Amends Table X11, parking, stopping and standing prohibited (Table X11)
7106 Amends s. 2.04.010, reorganization—aldermanic districts—council salaries (2.04 charter ordinances)
7108 Amends Table VI, one way streets and alleys (Table VI)
7109 Amends Table IX, parking during specified hours (Table IX)
7110 Amends ch. 15.04.030, sewerage service charge (15.04)
7117 Amends ch. 18.45, zoning code, site plans pedestrian and bicycle access (18.45.050)
7120 Amends Table IX, parking during specified hours & Amends Table XII, parking, stopping and standing prohibited (Table IX & Table X11)
7121 Amends XI, traffic control signals (Table XI)
7122 Creates ch. 6.14 Keeping of Honey Bees, (ch. 6.14)
7123 Amends ch. 14.08, connections and installation (14.08)

7126 Amends s. 18.65.030, Provision for signs by zoning code (18.65.030)
7127 Repeals Title 4, Cable Television
7130 Amends ch. 2.92, city procurement (s. 2.92.210, 2.92.215)
7131 Amends ch. 16.32, fire prevention code (16.32.010, 16.32.035, 16.32.050)
7134 Amends Charter Ord. ch. 2.76, employees' retirement system (2.76.010)
7135 Amends Table VIII, parking prohibited, (Table VIII)
7137 Denied Charter Ord. ch. 2.04, city government, (s.2.04.055)
7138 Charter Ord. ch. 2.04, city government, meeting-attendance from remote location, (s.2.04.065)
7139 Denied Amends ch. 9.32.030, discharging firearms (s. 9.32)
7142 Amends Table IX, parking during specified hours, (Table IX)
7148 Amends Table VIII, parking prohibited, (Table VIII)
7149 Amends ch. 3.20, room tax, allocation of tax collected (3.20.025)
7152 Amends s. 6.25.010, hunting and s. 9.32.030 discharging firearms (6.25.010, 9.32.030)
7156 Amends ch. 18.04 residential districts, establishment of uses, rooming houses (18.04.030 and 18.04.050)
7159 Amends ch. 10.38 alternate side parking, snow event (10.38.010, 10.38.020, 10.38.030)
7160 Charter Ord. ch. 2.04, reappointment of aldermanic districts (s.2.04.010)
7161 Amends ch. 9.59 special events, ch. 9.76 parks-public grounds, ch. 9.24 boating regulations, ch. 9.32 fireworks and firearms, creates s. 5.28.033 temporary class b license (ch. 9.59, ch. 9.76, ch. 9.24, ch. 9.32, s. 5.28.033)
7162 Amends ch. 15.04.030, sewerage service charge (15.04)
7166 Amends ch. 10.38 alternate side parking, snow event and table VIII parking prohibited, (10.38.010, Table VIII)
7167 Amends ch. 10.20, parking meters and lots; table IX, parking during specified hours, table X, parking meter locations (10.20.010, Table IX, Table X)
7168 Amends s. 2.72, pay plan (2.72.010)
7175 Amending ch. 10.24 special parking restrictions (10.24)
7176 Amending ch. 5.56 massage therapy facilities (5.56)
7177 Amending ch. 5.04 pawnbrokers (5.04)
7180 Creating s. 13.12.066, mobile food establishments, amending s. 9.76.100, parks—commercial enterprises, amending s 13.12.060 sale of goods (13.12.066, 9.76.100, 13.12.066)
7183 Creating c. 5.57 escort service license (5.57)
7186 Amending s. 2.72, pay plan (2.72.010)
7187 Amending s. 2.72 pay plan (2.72.020)
7191 Denied - Charter Ord amending s. 2.04.010 reorganization -- Aldermanic districts -- Council salaries", para. B regarding City Council salaries – Failed
7192 Amending s. 9.32, firearms restricted in certain buildings, (9.32.040)
7193 Amending s. 1.06.050 administrative review board, s. 2.64.030 waterways and parks commission, s. 2.65.030 landmarks commission, s. 3.16.030 special assessment deferment (1.06.050, 2.64.030, 2.65.030, 3.16.030)
7197 Amending c. 10.30, right turns prohibited at signalized intersections (10.30)
7198 Denied- Amending c. 10.36 snow emergency regulations, Failed
7201 Charter ord. amending section 2.04.040 city departments (2.04.040)
7202 Repealing c. 2.32 parks & recreation and c. 2.40 department of public works and creating c. 2.40 department of community services and c. 2.45 department of engineering (2.32, 2.40, 2.45)
7204 Creating c. 14.10 wellhead protection
7205 Amending c. 10.08 bicycles (10.08)
7206 Amending Table VIII, parking prohibited (Tables VIII)
7207 Amending c. 3.16 special Assessments (3.16)
7208 Amending c. 15.04 sewerage service charge (15.04)
7209 Amending s. 2.72 pay plan (2.72.010)
7210 Amending s. 2.72 pay plan (2.72.020)
7213 Amending c. 8.20 trees (8.20)
7214 Amending c. 18.45 site plans zoning (18.45)
7215 Amending c. 2.06 advisory commission on sustainability, c. 2.66, bicycle/pedestrian advisory commission (2.06, 2.66)
7216 Amending c. 16.16 on-premise signs (16.16)
7221 Repeal & recreate c. 16.08 housing code and amending c. 1.25 enforcement orders ispections (16.08, 1.25)
7222 Amending c. 14.10, wellhead protection (14.10)
7224 Amending Table I, speed limits (Table I)
7225 Amending c. 13.10 street excavations openings (13.10)
7234 Charter ord. s. 2.04.010, reorganization aldermanic districts (2.04.010)

7239 Creating c. 19.10 stormwater management, amending c. 16.36, 18.08, 18.45 on standards for development relating to stormwater and storm sewer (19.10, 19.20, 19.30, 19.40, 16.36, 18.08, 18.45)
7241 Amending Title 10, vehicles and traffic and Tables sections related to parking restrictions, enforcement, and meter changes (10.20.080, 10.24.020, 10.24.025, Table VIII, Table IX)
7243 Amending c. 9.76 entitled parks – public grounds, public art (9.76.230, 9.65 graffiti)
7246 Amending c. 16.16 sign code, temporary, special use, exempt signs, CBD wall signs (16.16)
7254 Amending s. 2.72 pay plan (2.72.010)
7255 Amending s. 2.72 pay plan (2.72.020)
7256 Amending c. 15.04 sewerage service charge (15.04)
7259 Charter Ord amending s. 2.04.010 reorganization -- Aldermanic districts
7261 Amending Table VIII, parking prohibited; Table iX parking during specific hours (Tables VIII, IX)
7266 Amending s. 2.72 pay plan (2.72.010)
7267 Amending s. 2.72 pay plan (2.72.010)
7273 Amending s. 13.12.066 mobile food establishments (13.12)
7274 Amending ch. 3.12, tax rolls (3.12)
7275 Amending s. 8.28.010 yards and lawns (8.28)
7276 Amending s. 6.14.030, permits required, keeping of honey bees (6.14)
7277 Amending s. 2.72 pay plan (2.72.010)
7278 Amending s. 2.72 pay plan (2.72.010)
7279 Amending s. 2.72 pay plan (2.72.010)
7283 Amending s. 8.16.030 licenses-required; s. 13.12.065 sidewalk cart food vendors; s. 13.12.066 mobile food establishments (8.16, 13.12)
7289 Amending Table1 speed limits (Table l)
7290 Amending Table IX parking prohibited, parking during specific hours (Table lX)
7293 Charter ord. s. 2.04.010, reorganization aldermanic districts (2.04.010)
7297 Creating s. 9.52.045, public excessive intoxication, creating s. 9.36.015, community nuisance (9.52.045, 9.36.015
7298 Creating ch. 8.08, conversion therapy prohibited, (8.08)
7299 Amending Table IX parking prohibited, parking during specific hours (Table lX)
7300 Amending s. 10.44.070, late payment penalty, (10.44.070)
7301 Amending ch. 15.04 sewerage service charge (15.04)
7302 Amending s. 2.72 pay plan (2.72.010)
7303 Amending ch. 9.76, parks-public grounds (9.76)
7305 Charter ord. s. 2.04.010, reorganization aldermanic districts (2.04.010)
7307 Creating ch. 6.15, keeping of poultry (6.15)
7308 Amending s. 9.37.020, penalties, possession of marijuana, s. 1.24.030, deposit schedule (9.37.020, 1.24.030)
7309 Amending ch. 5.04, pawnbrokers (5.04)
7313 Amending Table VIII, parking prohibited (Table VIII)
7319 Amending ch 3.16, special assessments (3.16)
7320 Amending ch. 6.14, keeping of bees (6.14)
7321 Creating ch. 5.64, dockless bike share, amending ch. 10.08 parking (5.64, 10.08.100)
7322 Amending Table IX parking prohibited, parking during specific hours (Table IX)
7329 Charter ord. s. 2.04.010, reorganization aldermanic districts (2.04.010)
7336 Amending ch 10.38, alternate side parking (10.38
7337 Amending Table IX, parking during specific hours (Table lX)
7343 Charter ord. s. 2.04.010, reorganization aldermanic districts (2.04.010)
7344 Amending s. 2.72 pay plan (2.72.010)
7345 Amending s. 2.72 employee leave and benefits (2.72.020)
7346 Amending Table IX parking prohibited, parking during specific hours (Table lX)
7347 Amending c. 15.04 sewerage service charge (15.04)
7350 Amending for people first language, c. 8.32.050, responsibilities of refuse haulers, c. 10.16.010, motorized vehicles prohibited, c. 13.12.065, sidewalk cart food vendors, c. 18.02.020 zoning code definitions (8.32.050, 10.16.010, 13.12.065, 18.02.020)
7351 Amending s. 2.72.010, pay plan (2.72.010)
7352 Amending c. 18.45, multi-family housing design manual (18.45)
7355 Charter ord. s. 2.04.010, reorganization aldermanic districts (2.04.010)
7356 Amending s. 2.72.010, pay plan (2.72.010)
7357 Creating s. 14.04.110, lead service line (14.04.110)
7358 Amending c. 16.24, electrical code (16.24)
7359 Amending c. 10.20, parking meters and lots (10.20.080, 10.20.110)

7360 Creating c. 2.67, housing opportunities commission (2.67)
7365 Charter ord. s. 2.04.010, reorganization aldermanic districts (2.04.010)
7366 Amending c. 2.48, board of review (2.48)
7372 Charter ord. s. 2.04.010, reorganization aldermanic districts (2.04.010)
7378 Amending s. 13.12.062, sidewalk café permits and s. 5.28.037, sidewalk cafes in downtown and Water Street areas (13.12.062, 5.28.037)
7385 Charter ord. s. 2.04.010, reorganization aldermanic districts (2.04.010)
7386 Amending c. 9.38 smoking, vaping (8.05.020, 8.05.140, c. 9.38)
7390 Amending c. 2.08 remote meeting attendance (2.08.065)
7393 Amending s. 2.72.010, pay plan (2.72.010)
7397 Charter ord. s. 2.04.010, reorganization aldermanic districts (2.04.010)
7398 Amending Table XII parking, stopping and standing prohibited, (Table XII, c. 10.04)
7399 Amending ch. 15.04 sewerage service charge (15.04)
7400 Amending s. 2.72.010, pay plan (2.72.010)
7403 Charter ord. s. 2.04.010, reorganization aldermanic districts (2.04.010)
7406 Amending c. 10.20, parking meters and lots (10.20.080)
7413 Creating s. 13.12.063 street use, creating parklet and parklet café (13.12.063)
7414 Creating c. 5.65, scooter share (5.65)
7424 Charter ord. s. 2.04.010, reorganization aldermanic districts (2.04.010)
7425 Amending title 14 waterworks, title 15 sewer and sewerage (title 14, title 15)
7429 Charter ord. s. 2.04.010, reorganization aldermanic districts (2.04.010)
7432 Amending Table IX parking during specified hours (Table IX)
7438 Amending Table VIII parking prohibited, Table IX parking during specified hours (Tables VIII, IX)
7439 Amending c. 10.48.020, thru truck traffic limited (10.48.020)
7440 Amending c. 5.28, alcoholic beverages (5.28)
7442 Charter ord. s. 2.04.010, reorganization aldermanic districts (2.04.010)
7450 Amending Table IX parking during specified hours (Table IX)
7451 Amending Table III stop intersections, Table V yield intersections, (Tables III, V)
7452 Amending Table VIII parking prohibited (Table VIII)
7453 Charter ord. s. 2.04.010, reorganization aldermanic districts (2.04.010)
7455 Amending Table VIII parking prohibited,10.24.020, physically disabled persons parking (Table VIII, 10.24.020)
7456 Amending s. 2.72.010, pay plan (2.72.010)
7460 Amending s. 2.72.010, pay plan (2.72.010)
7464 Amending s. 2.72.010, pay plan (2.72.010)
7466 Amending c. 3.20, room tax (3.20)
7468 Charter ord. s. 2.04.010, reorganization aldermanic districts (2.04.010)
7474 Amending s. 1.06.050 administrative review board, (1.06.050)
7479 Amending Table X and 10.20.080 parking meters,10.24.030, business district parking , (Table X, 10.20.080, 10.24.030)
7484 Charter ord. s. 2.04.010, reorganization aldermanic districts (2.04.010)
7486 Amending Table XII parking stopping and standing, electric vehicle charging hub (Table XII)
7491 Amending s. 2.72 employee leave and benefits (2.72.020)
7492 Amending s. 2.72.010, pay plan (2.72.010)
7493 Charter ord. s. 2.04.010, reorganization aldermanic districts (2.04.010)

INDEX

- A -

ADMINISTRATION DEPARTMENT see FINANCE DEPARTMENT

ADMINISTRATIVE DECISIONS, REVIEW OF

ADMINISTRATIVE REVIEW BOARD 1.06.050
DETERMINATIONS SUBJECT TO REVIEW 1.06.030
LEGISLATIVE PURPOSE 1.06.010
PROCEDURE FOR REVIEW 1.06.060
REVIEW OF ADMINISTRATIVE DECISIONS 1.06.020

ADMINISTRATIVE REVIEW BOARD see ADMINISTRATIVE DECISIONS, REVIEW OF

ADULT-ORIENTED ESTABLISHMENTS

APPLICATION OF CHAPTER 8.06.040
DEFINITIONS 8.06.020
PENALTY 8.06.050
PURPOSE AND INTENT 8.06.010
REGULATION OF ADULT-ORIENTED ESTABLISHMENTS 8.06.030

ADVERTISING

See also SIGN CODE
BILLPOSTING RESTRICTIONS 9.72.010
DISTRIBUTION PROHIBITED WHEN 9.72.020
VIOLATION, PENALTY 9.72.030

(This page left blank.)

ALARM

See also Specific Alarm
FALSE
Charges for 9.04.040
Fire, police, prosecution 9.04.020
Generally, prosecution 9.04.010
Penalty, enforcement 9.04.030
PRIVATE SYSTEM
Central alarm station defined 9.10.020
Certain devices prohibited 9.10.030
Definitions, defined 9.10.020
Emergency communications center defined 9.10.020
Exception to provisions 9.10.050
Fire department defined 9.10.020
Monitoring 9.10.040
Police department 9.10.020
Premises, local alarm 9.10.020
Purpose of provisions 9.10.010
Telephone, electronic device defined 9.10.020
Violation, penalty 9.10.060

ALCOHOL BEVERAGES

CONSUMPTION/POSSESSION OF OPEN CONTAINERS IN CITY BUILDINGS, PUBLIC PARKING LOTS/RAMPS
Penalty 9.52.050
Prohibited 9.52.040
LICENSE, ALCOHOL
Application filing dates 5.28.025
Application for 5.28.020
“Class B” license for sale of intoxicating liquor 5.28.032
“Class B” Temporary 5.28.033
Display on premises 5.28.070

Fees
fermented malt beverage 5.28.100
intoxicating liquor 5.28.110
Granting of 5.28.040
Health and sanitation 5.28.080
Issuance restricted 5.28.050
Number limited 5.28.120
Regulations 5.28.030
Revocation upon abandonment of premises 5.28.060
State statutes adopted 5.28.010
Underage person on premise 5.28.035
LICENSE, BEVERAGE OPERATOR'S
Issuance of 5.28.090
Mandatory operator's training 5.28.095
Violation, Penalty 5.28.130

AMUSEMENT DEVICE

DEFINED 5.02.010
DEFINITIONS 5.02.010
LICENSE, OPERATOR'S
Fee, record inspection agreement 5.02.030
Issuance conditions, term 5.02.040
Required 5.02.020
Revocation, when 5.02.070
OPERATOR-POSSESSOR DEFINED 5.02.010
PHONOGRAPH, COIN-OPERATED, DEFINED 5.02.010
PRIZE OFFERING, PROHIBITED 5.02.050
QUALIFIED PERSON REQUIRED ON PREMISES 5.02.045
UNLICENSED, PROHIBITED 5.02.010
VIOLATION, PENALTY 5.02.060

ANIMAL

See also PET SHOP, KENNEL
BARNYARD SANITATION 6.12.060
CARE 6.08.030
CATTLE, GOATS
Keeping, restrictions 6.12.020
Registration 6.12.040
CERTAIN SPECIES PROHIBITED 6.12.010
COW See CATTLE,
GOATS CRUELTY TO, PROHIBITED 9.40.010
DOG See DOG EXCRETA REMOVAL, DISPOSAL 6.08.060
DOG, DANGEROUS 6.08.045
EXHIBITION, INDECENT
Prohibited 9.40.020
Violation, penalty, enforcement 9.40.030

HUNTING
Bow hunting of deer permitted conditionally 9.32.030
Prohibited generally 9.32.030
INHUMANE TREATMENT
Acts designated, prohibited 6.11.010
Violation, penalty 6.11.020
NUMBER PER FAMILY 6.08.020
PIGEONS
Defined 6.16.010
Definitions 6.16.010
Keeping, maintenance conditions 6.16.060
Loft, defined 6.16.010
Violation, penalty 6.16.070
RABIES
Quarantine, disposition 6.08.050
RUNNING AT LARGE PROHIBITED 6.08.010
SNAKES 6.12.015
SQUIRRELS
Hunting, by dog, prohibited 6.20.030
Nest, molesting prohibited 6.20.020
Protection 6.20.010
Traps, unlawful 6.20.040
SWINE
Keeping, restrictions 6.12.030
VACCINATION 6.08.055
VIOLATION, PENALTY 6.08.070, 6.12.070

APPEALS BOARD

See also ZONING
FLOOD PLAIN PERMIT ACTION 16.04.130
FUNCTIONS GENERALLY 16.04.180

ASSAULT, BATTERY

UNLAWFUL, PENALTY 9.12.010

ASSEMBLIES, PUBLIC; MARCHES

DEFINITIONS 9.60.010
EXCEPTION FOR CITY PARKS 9.60.030
HOURS 9.60.050
NOISE RESTRICTED 9.60.060
PARKS--PUBLIC GROUNDS 9.60.070
PERMIT
Appeal procedure 9.60.120
Application 9.60.080
Application time limit 9.60.090
Denial, notice of 9.60.110
Fees and costs 9.60.130
Required 9.60.020
Review and recommendation 9.60.100
SPECIAL EVENT PERMIT 9.60.040
VIOLATION--PENALTIES 9.60.140

ASSESSMENT, SPECIAL See FINANCE

ASTROLOGY See FORTUNETELLING

ATTORNEY, CITY

DUTIES GENERALLY 2.12.010
ORDINANCE CONSOLIDATION ACTION 2.08.140
POWERS GENERALLY 2.12.020

AUDITORIUM See ZONING

AUTOMOBILE

See JUNKED MOTOR VEHICLE
See VEHICLE
See ZONING

- B -

BAKERY See ZONING

BAND, MUNICIPAL

CREATED, DIRECTION 2.80.010

BANNERS, OVERHEAD

APPLICATION FOR 16.16.210
APPROVAL BY CITY MANAGER 16.16.210
DEFINED 16.16.210
INSURANCE REQUIREMENTS 16.16.260

BEVERAGE, ALCOHOLIC See ALCOHOL BEVERAGE

BICYCLE

BICYCLE WAY, DESIGNATION OF 10.08.120
DOCKLESS BICYCLE SHARE 5.64
HOURS OF OPERATION, AGE LIMIT 10.08.090
PARKING 10.08.100
RIDING ON SIDEWALKS OR THE BICYCLE WAY, RESTRICTIONS 10.08.110

BICYCLE/PEDESTRIAN ADVISORY COMMISSION/COMMITTEE

COMPOSITION 2.66.030
CREATION 2.66.010
DUTIES AND RESPONSIBILITIES 2.66.050
MEETINGS 2.66.060
PROCEDURE 2.66.040
PURPOSE AND INTENT 2.66.020

BILLIARD HALL See **POOL, BILLIARD HALL**

BLOCK PARTY

APPEAL 9.58.080
APPLICATION 9.58.030
APPROVAL 9.58.040
DEFINITIONS 9.58.010
HOURS 9.58.060
NOISE 9.58.050
PURPOSE 9.58.020
TERMINATION 9.58.070
VIOLATION--PENALTY 9.58.090

BOARD See Specific Board

BOARDINGHOUSE See **ZONING**

BOARDS AND COMMISSIONS

APPOINTMENT TO 2.04.050

BOAT See **ZONING**

BOATING REGULATIONS

CHIPPEWA RIVER
Bulkhead lines 9.24.050
Buoys and markers, placement of 9.24.060
HALF MOON LAKE
Buoys, placement of 9.24.070
Motor boats 9.24.030
Water ski exhibitions--permits 9.24.040
Water skiing 9.24.020
PURPOSE 9.24.010
SEVERABILITY 9.24.090
VIOLATIONS, PENALTIES 9.24.080

BODY PIERCING See **TATTOOING AND BODY PIERCING**

BOND

ASSEMBLY 9.60.100
BUILDING
Inspector 16.04.070
Mover 5.20.020
CABLE TELEVISION 4.04.210
COMPTROLLER 2.68.030
ELECTRICAL CONTRACTOR 16.24.070
HEATING CONTRACTOR 5.22.040
OBLIGATION ASSUMED BY CITY 2.68.020
PAWNBROKER 5.32.020
PLUMBING INSPECTOR 16.20.040
SIDEWALK CONSTRUCTION, REPAIR 13.04.040
STREET ENCROACHMENT 13.24.050
SUBDIVISION IMPROVEMENT PERFORMANCE 17.04.020
TREASURER RELIEVED OF 2.68.010

BOWLING ALLEY See POOL, BILLIARD HALL

BOULEVARD PLANTING, CARE, AND MAINTENANCE 8.28.102

BUILDING

See also ZONING CODE
See BUILDING CODE
DAMAGING 9.68.020
INSPECTOR See BUILDING INSPECTOR
MOVING
Application 5.20.020
Inspection procedure 5.20.040
License, required 5.20.010, 5.20.050
Owner notification 5.20.060
Permit, moving conditions 5.20.030
Violation, penalty 5.20.070
NUMBERING See STREETS AND SIDEWALKS

BUILDING CODE

ADMINISTRATION
- Alterations and repairs 16.04.120
  - major alterations and repairs 16.04.120
  - minor repairs 16.04.120
  - required 16.04.120
- Building code committee 16.04.160
  - amendments 16.04.160
  - appeals 16.04.160
  - application for approval of new materials or methods 16.04.160
  - creation and membership 16.04.160
  - meetings and rules 16.04.160
- Building inspector
  - qualifications--duties 16.04.070
- Building maintenance 16.04.140
- Building use changes 16.04.130
- Penalty and violations 16.04.150
  - citations 16.04.150
  - stop work order 16.04.150
- Permit
  - application--issuance 16.04.080
  - fees 16.04.090
  - general conditions 16.04.100
- Unsafe buildings
  - determination--abatement 16.04.110

AIRPORT, BUILDING AND CONSTRUCTION STANDARDS
- Procedure 16.38.030
- Purpose 16.38.010
- Review criteria 16.38.050
- Submittal requirements 16.38.040
- When required 16.38.020

CONSTRUCTION, GENERAL
- Construction requirements--applicability 16.04.180
  - accessory buildings and structures 16.04.180
    - concrete floors 16.04.180
    - eaves 16.04.180
    - foundations 16.04.180
    - pole type buildings 16.04.180
    - roofs, pitched 16.04.180
    - separation from dwelling units 16.04.180
    - wood floors 16.04.180
  - carports 16.04.180
  - garages, attached 16.04.180
  - one- and two-family dwellings 16.04.180
    - additions 16.04.180
    - alterations and repairs 16.04.180
    - balcony, exit, minimum floor level 16.04.180
    - energy conservation 16.04.180
    - minimum floor space and room arrangement 16.04.180
    - rooms, habitable, below grade 16.04.180
    - stairways, existing 16.04.180
    - stairways, main exit exterior 16.04.180
    - smoke detectors 16.04.180
- Requirements applying to all buildings 16.04.170

DEMOLITION OF STRUCTURES
General requirements 16.04.300
Permit required 16.04.280
Safety provisions 16.04.290
debris, containment of 16.04.290
dust, containment of 16.04.290
guards, barricades and fences 16.04.290
health and safety of public ensured 16.04.290
permit from city engineer, when required 16.04.290
street closing 16.04.290
Structures listed on the national or state register of historic places 16.04.285
GENERAL PROVISIONS
Definitions 16.04.050
Highest standards prevail 16.04.060
Purpose 16.04.030
Scope 16.04.040
Short title 16.04.020
Title 16.04.010
Uniform dwelling code 16.04.010
alterations, repairs, additions 16.04.010
appeal 16.04.010
definitions 16.04.010
fees 16.04.010
enforcement, method of 16.04.010
liability for damages 16.04.010
permits 16.04.010
purpose 16.04.010
state uniform dwelling code adopted 16.04.010
title 16.04.010
violation and penalty 16.04.010
MOVED STRUCTURES
Compliance 16.04.320
Permit required 16.04.310
Safety provisions 16.04.330
RETAINING WALLS
Construction and general design 16.04.210
Definitions 16.04.190
Permit required 16.04.200
Unsafe retaining walls--determination/abatement 16.04.220
SPECIAL BUILDING DISTRICT
Boundaries defined 16.04.350
Restrictions within 16.04.360
additions 16.04.360
alterations, exterior wall 16.04.360
changes, minor 16.04.360
damaged structures 16.04.360
exceptions 16.04.360
general 16.04.360
materials, decorative combustible 16.04.360
Scope 16.04.340

SWIMMING POOLS

Construction and structural design 16.04.260
Definitions 16.04.230
Fencing 16.04.250
Health department approval 16.04.270
Permit required 16.04.240

BUILDING INSPECTOR

AWNING INSPECTION 16.16.050
BUILDING
Moving
inspection 5.20.040
notification requirement 5.20.030
FERMENTED MALT BEVERAGE, LICENSE ACTION 5.28.070
INTOXICATING LIQUOR LICENSE ACTION 5.30.050
JUNKED MOTOR VEHICLE REMOVAL NOTICE 8.36.050
LAND USE MAP CONFORMANCE ENFORCEMENT 18.16.070
MASSAGE ESTABLISHMENT INSPECTION, INVESTIGATION AUTHORITY 5.56.030
MATERIALS, NEW, INVESTIGATION, RECOMMENDATION 16.04.160
MOBILE HOME INSPECTION 16.12.050
QUALIFICATIONS, DUTIES GENERALLY 16.04.070
RECORDKEEPING REQUIREMENT 16.04.070
SIGN PERMIT PLAN INSPECTION 16.16.040
UNSAFE BUILDING DETERMINATION, ABATEMENT 16.04.110

BUS See ZONING

BUSINESS LICENSE

See Specific Business

CABARET LICENSE

APPLICATION 5.26.060
CIVIC CENTER EXEMPTION 5.26.080
CONDITIONS 5.26.070
REQUIRED
Class A 5.26.020
Class B, dancing prohibited 5.26.030
Generally 5.26.010
REVOCATION 5.26.050
TERM 5.26.040
TRANSFERABILITY 5.26.040
VIOLATION, PENALTY 5.26.090

CABLE TELEVISION

TITLE 4 REPEALED IN ITS ENTIRETY ON FEBRUARY 24, 2015, ORDINANCE #7127

CAFE, SIDEWALK

PERMIT REQUIRED 13.12.062
SIDEWALK CAFES IN THE DOWNTOWN AND WATER STREET AREAS 5.28.037

CAMPING

DEFINITIONS 9.74.020
ON CITY PROPERTY 9.74.030
PENALTY 9.74.040
PURPOSE 9.74.010

CAR WASH See ZONING, AUTOMOBILE

CAT
See ANIMAL
See DOG, CAT LICENSE

CEMETERY

COLUMBARIA 2.84.165
DEFINITIONS 2.84.015
DISINTERMENT 2.84.100
FEE, CHARGE SCHEDULE 2.84.160
FUND See CEMETERY FUND
INTERMENT
Baby 2.84.140
Generally 2.84.090
Ownership rights 2.84.050
Veteran 2.84.200
LANDSCAPING, LIABILITY, CITY ACTION 2.84.070
LOT
Purchase 2.84.040
MAINTENANCE AND CARE 2.84.060
MARKER, MONUMENT 2.84.110
MONUMENTATION STRUCTURES 2.84.120
PLANT, FLOWER, DECORATION PLACEMENT 2.84.130
POLICY STATEMENT 2.84.030
PURPOSE OF REGULATIONS 2.84.010
RULES PAMPHLETS ADOPTED 2.84.020

VIOLATION, PENALTY 2.84.210
VISITING RESTRICTIONS 2.84.080

CEMETERY FUND

ASSESSMENT, DELINQUENT, STATUTE ADOPTION 3.08.020
CREATION 3.08.010

CENTRAL EQUIPMENT, STORES AGENCY

ACCOUNTING, OPERATIONAL PROCEDURES 2.24.130
CREATED 2.24.030
EQUIPMENT
- Director of finance responsibility 2.24.020
- Purchase 2.24.120
- Rental
  - basis 2.24.080
  - charge 2.24.090
- Replacement 2.24.110
- Sale 2.24.100

FUND, RENTAL ACCOUNT SEGREGATION 2.24.140
INVENTORY SYSTEM, OPERATION 2.24.060
JURISDICTION 2.24.050
PURPOSE, FUNCTION 2.24.040

CHARITABLE SOLICITATION 5.37; repealed by ordinance #4394, August 24, 1983

CHICKENS See **KEEPING OF POULTRY** 6.15

CHURCH See ZONING

CIGARETTE VENDOR

LICENSE
Application, contents fee 5.06.030
Required 5.06.010
Term 5.06.020
VIOLATION, PENALTY 5.06.040

CITATION See PENALTY, GENERAL

CITY

CLAIMS AGAINST See CLAIMS AGAINST CITY
DEPARTMENTS DESIGNATED 2.04.040
OFFICIALS--ELECTION 2.04.015
RECORDS, PUBLIC
Definitions 1.08.010
Destruction of 1.08.070
Duty to maintain 1.08.020
Photocopying, cost to public 1.08.040
Preservation through reproduction methods 1.08.090
Public access to 1.08.040

CIVIL DEFENSE see EMERGENCY PREPAREDNESS

CLAIRVOYANCE See FORTUNETELLING

CLEANING, DYEING PLANT See ZONING

CLERK, CITY

ALCOHOL BEVERAGE LICENSES
Application notification 5.28.020
Issuance of 5.28.040
AMUSEMENT DEVICE LICENSE FORM ACTION 5.02.040
CEMETERY LOT OWNER AGREEMENT FILING, RECORDATION 2.84.050
DIRECT SELLERS LICENSE 5.34.010
DUTIES GENERALLY 2.16.010
ELECTION CANVASS 2.20.050
HEALTH DEPARTMENT LICENSES, RESTAURANT AND RETAIL MEAT 2.16.040
HEATING CONTRACTOR LICENSE ISSUANCE 5.22.050
LICENSE, APPEAL TO CITY COUNCIL 2.16.030
PAWNBROKER LICENSE ISSUANCE 5.32.030
PIGEON LICENSE APPLICATION, ISSUANCE 6.16.030
REFUSE COLLECTION
License issuance
to applicant 8.32.020
to transferee 8.32.030
Vehicle permit issuance 8.32.070
RESTAURANT LICENSE APPLICATION 8.16.020
SEWER CONNECTION NOTIFICATION 16.20.440
SUBDIVISION
Final plat action 17.20.020
Preliminary plat action 17.16.020
TAX ROLL COMPUTATION PROCEDURE 3.12.010

CLINIC See ZONING

CLUB, PRIVATE See ZONING

CODE

ACTS PROHIBITED
Causing, permitting, effect 1.04.070
Principal, agent commission, effect 1.04.030
ADOPTION 1.01.010
CITY DEFINED 1.04.010
CODIFICATION AUTHORITY 1.01.020
COMPUTATION OF TIME DEFINED 1.04.010
CONSTITUTIONALITY 1.01.100
COUNCIL DEFINED 1.04.010
COUNTY DEFINED 1.04.010
DEFINITIONS 1.04.010
EFFECTIVE DATE 1.01.090
EFFECT OF ADOPTION ON PAST ACTIONS, OBLIGATIONS 1.01.080
GRAMMATICAL INTERPRETATION 1.04.040
HEADINGS NOT TO GOVERN 1.01.060
LAW DEFINED 1.04.010
MAY DEFINED 1.04.010

MONTH DEFINED 1.04.010
MUST, SHALL DEFINED 1.04.010
OATH DEFINED 1.04.010
ORDINANCE See ORDINANCE
OWNER DEFINED 1.04.010
PENALTY
Indigent imprisonment not authorized 1.16.050
Not specified, effect 1.16.010
PRECEDING, FOLLOWING DEFINED 1.04.010
PROPERTY
Defined 1.04.010
Personal, defined 1.04.010
Real, defined 1.04.010
REFERENCE APPLIES TO AMENDMENTS 1.01.050
SIDEWALK DEFINED 1.04.010
STATE DEFINED 1.04.010
STREET DEFINED 1.04.010
TENANT, OCCUPANT DEFINED 1.04.010
TITLE, CITATION, REFERENCE 1.01.020
TITLE OF OFFICE DEFINED 1.04.010
VIOLATION
Imprisonment authorized when 1.16.040
Misdemeanor, when 1.16.030
Second, subsequent, effect 1.16.020
WORDS, PHRASES 1.04.020
WRITTEN DEFINED 1.04.010
YEAR DEFINED 1.04.010

COMMISSIONS AND BOARDS

APPOINTMENT TO 2.04.050

COMMUNICATION SYSTEMS, PRIVATE

PERMITS FOR USE OF RIGHT OF WAY FOR PRIVATE TELECOMMUNICATIONS SYSTEMS
COMPENSATION REQUIRED; LICENSE FEE 5.60.030
DEFINITIONS 5.60.010
EXISTING PRIVATE COMMUNICATIONS SYSTEMS 5.60.100
FEE ADJUSTMENT 5.60.040
INDEMNIFICATION; INSURANCE 5.60.080
PENALTY 5.60.240
PERMIT
Locations 5.60.060
Nonexclusive; term 5.60.050
Required 5.60.020
Revocation 5.60.230
STREETS AND POLE ATTACHMENTS, USE OF 5.60.070
TRANSFERS OR ASSIGNMENTS 5.60.090

PERMITS FOR USE OF RIGHT OF WAY FOR WIRELESS COMMUNICATIONS AND WIRELESS COMMUNICATIONS SYSTEMS
CELL SITES, REMOVAL OF 5.60.200
COMPENSATION REQUIRED; LICENSE FEE 5.60.130
DEFINITIONS 5.60.110
EXISTING PRIVATE COMMUNICATIONS SYSTEMS 5.60.220
FEE; ADJUSTMENT; SAVINGS CLAUSE 5.60.140
INDEMNIFICATION; INSURANCE 5.60.210
PENALTY 5.60.240
PERMIT
Locations 5.60.160
Nonexclusive, term 5.60.150
Revocation 5.60.230
Required 5.60.120
PRIVATE PROPERTY, PLACEMENT ON 5.60.190
STREETS AND POLE ATTACHMENTS, USE OF 5.60.170
TRANSFERS OR ASSIGNMENTS 5.60.180

COMMUNITY CENTER See ZONING

COMMUNITY DEVELOPMENT DEPARTMENT

APPOINTMENT--DUTIES 2.54.020
CREATED 2.54.010

COMPTROLLER, CITY

FEE CERTIFICATION 2.28.100

CONCEALED CARRY

FIREARMS RESTRICTED IN CERTAIN BUILDINGS 9.32.040

CONCRETE See ZONING

CONSERVANCY DISTRICT See ZONING

CONTAGIOUS DISEASE See HEALTH

CONVALESCENT HOME See ZONING

CONVENT See ZONING

CONVERSION THERAPY See 8.08

COUNCIL, CITY

BEVERAGE OPERATOR'S LICENSE ISSUANCE 5.28.090
BOARD OF PUBLIC WORKS ROLE 2.08.150
BUILDING CODE AMENDMENT ACTION 16.04.260
DUTIES AND RESPONSIBILITIES 2.04.011
EMERGENCY PROCLAMATION REVIEW 9.88.040
INDUSTRIAL HAULER LICENSE CONSIDERATION 8.32.060
MEETING
- Agenda 2.08.075
- Location, date, time 2.08.010
- Order 2.08.060
- Public 2.08.050
- Remote Attendance 2.08.065
- Special 2.08.020

OFFICER ELECTION
- Generally 2.08.020
- President 2.08.040

ORDER OF BUSINESS 2.08.080
ORDINANCE
- Introduction, passage 2.08.120
- Numbering 2.08.140
- Reading 2.08.130

ORGANIZATION, COMPOSITION, SALARIES 2.04.010
PLUMBING SUPERINTENDENT APPOINTMENT 15.08.030
POLICE UNIFORM ALLOWANCE 2.36.050
REORGANIZATION 2.04.030
RESOLUTION
- Introduction, passage 2.08.110
- Written 2.08.100

SEWER
- Appeal board member 15.04.080
- Duties 15.04.120
- Wastewater service charge billing interval establishment 15.04.030

STREET NAME ACTION 13.28.010
SUSPENSION OF RULES, WHEN 2.08.090
VOTING
- Reconsideration 2.08.095
- Record 2.08.070
- Rules 2.08.030

COURTS, YARDS See ZONING

CURFEW

HOURS PROHIBITED IN PUBLIC 9.84.010

DANCING, NUDE **See NUDE DANCING**

DAY CARE CENTERS **See ZONING**

DEPARTMENT, ADMINISTRATIVE See Specific Department

DIRECT SELLERS

APPEAL 5.34.060
EXEMPTIONS 5.34.030
INVESTIGATION 5.34.050
RECORDS 5.34.080
REGISTRATION
Procedures for 5.34.040
Required 5.34.010
REGULATION OF 5.34.070
REVOCATION BY CITY COUNCIL 5.34.090
SEVERANCE CLAUSE 5.34.110
SHOWS AND EXHIBITIONS 5.34.025
VIOLATION, PENALTY 5.34.100

DISCRIMINATION **See HOUSING**

DISORDERLY CONDUCT

DEFECATION PROHIBITED 9.56.055
DEFINED 9.56.010
HARBORING OF JUVENILES WITHOUT PARENTAL CONSENT PROHIBITED 9.56.020
NOISES DISTURBING THE PUBLIC PEACE, PROHIBITION OF 9.56.070
PARTIES OR GATHERINGS, LOUD 9.56.075
PENALTY, ENFORCEMENT OF 9.56.040
PUBLIC GOOD ORDER 9.56.050
RELIGIOUS ASSEMBLY, DISTURBANCE OF 9.56.030
RESPONSIBILITY OF OWNER OR OCCUPANT 9.56.090
URINATION PROHIBITED 9.56.055
VIOLATION, PENALTY 9.56.060 and 9.56.080

DOG

See ANIMAL
See DOG, CAT LICENSE
See PET SHOP, KENNEL

DOG, CAT LICENSE

PURPOSE 6.04.005
REQUIRED, FEE 6.04.010
TAGS 6.04.020
VIOLATION, PENALTY 6.04.030

DOG POUND

See ZONING

DRIVEWAY SURFACING - See BUILDING CODE

DUMP See ZONING

DUMPSTERS AND ROLL-OFF BOXES IN THE PUBLIC RIGHT-OF-WAY - See STREETS AND SIDEWALKS

DUTCH ELM DISEASE See TREE

DWELLING

See also ZONING
UNIFORM CODE ADOPTED 16.04.005

- E -

ECONOMIC DEVELOPMENT FUND

APPROPRIATIONS See FISCAL CONTROL ESTABLISHMENT DETERMINATION 3.30.010
EXPENDITURES
Approval 3.30.040
Eligible projects 3.30.030
FISCAL CONTROL 3.30.050
PURPOSE 3.30.020
REGULATIONS 3.30.060

ECONOMIC DEVELOPMENT FUND REVIEW COMMITTEE

ESTABLISHMENT 3.30.060

ELECTION

CITY OFFICIALS 2.04.015
DUTIES DISTRIBUTED 2.20.020
OFFICIALS
Compensation 2.20.030
Number required 2.20.010
POLL, HOURS OPEN 2.20.040

ELECTRICAL

CODE See ELECTRICAL CODE
INSPECTOR See ELECTRICAL CODE LICENSE
Application
deposit required 5.12.040
submittal, review 5.12.030
Classes 5.12.020
Fees 5.12.050
Renewal 5.12.055
Required 5.12.010

ELECTRICAL CODE

CIRCUIT, SEPARATE, REQUIRED WHEN 16.24.170
CITY NONLIABILITY 16.24.090
CONDUIT ABOVE ROOFLINE, SPECIFICATIONS 16.24.200
CONTRACTOR
Insurance requirement 16.24.080
EMERGENCY WORK 16.24.250
GROUNDING 16.24.160
INSPECTION CERTIFICATE 16.24.240
INSPECTOR
Appointment 16.24.010
Certificate issuance 16.24.240
Duties
concurrent with fire chief 16.24.030
generally 16.24.020
Findings, action 16.24.220
Right of entry 16.24.230
OUTDOOR LIGHTING 16.26
PERMIT
Fee schedule 16.24.130
Issuance 16.24.120
Required 16.24.100
STANDARDS, MINIMUM
Outlet, switch installation 16.24.210
State statutes adopted 16.24.140
SWITCH See OUTLET, SWITCH
UNDERGROUND SERVICE SPECIFICATIONS 16.24.190
VIOLATION, PENALTY 16.24.260
WIRING, ABANDONED 16.24.180
WIRING METHODS, INSTALLATIONS 16.24.150
WISCONSIN STATE ELECTRICAL CODE ADOPTED 16.24.145

ELECTRONIC CIGARETTE E-Cigarette, Vaping See Smoking 9.38.010, 9.38.012, 9.38.015

EMERGENCY PREPAREDNESS

APPOINTMENT; POWERS, DUTIES AND RESPONSIBILITIES 2.88.010

EMPLOYEE, CITY

BENEFIT FROM CITY CONTRACT, DISCLOSURE REQUIRED 2.92.230
CODE
Adopted 2.72.010
Amendments 2.72.030
EMPLOYMENT, PRIVATE, RESTRICTIONS 2.92.250
RECEIPT OF GIFTS, GRATUITIES, PROHIBITED 2.72.130
RETIREMENT FUND, ENACTMENT 2.76.010

ENCROACHMENTS see STREETS AND SIDEWALKS

ENERGY CONSERVATION STANDARDS See DWELLING

ENFORCEMENT--ORDERS--INSPECTIONS
ENFORCEMENT ORDER 1.25.010
REINSPECTION FEE FOR FAILURE TO COMPLY 1.25.020

ENGINEER, CITY

SEWER CONNECTION ACTION 15.08.060

ESCORT SERVICE

LICENSE 5.57

EXHIBITION DRIVING see **TRAFFIC**

EXHIBITION, PUBLIC See **PERFORMANCE, PUBLIC**

EXPLOSIVES

See also FIREWORKS
PERMIT REQUIRED 9.28.010
VIOLATION, PENALTY 9.28.020

- F -

FAIR HOUSING See **HOUSING**

FARM See **ZONING**

FENCE

BARBED WIRE PERMITTED WHEN 9.64.010
ELECTRIC 9.64.015
HEIGHT, LIMITATION 18.30.040
NUISANCE, WHEN 9.64.020
SPITE, STATUTE ADOPTION 9.64.030
STANDARDS, SPECIFIC 18.30.040
SWIMMING POOL 16.04.250
VIOLATION, PENALTY 9.64.040

FERMENTED MALT BEVERAGE see **ALCOHOL BEVERAGE**

FINANCE DEPARTMENT

ASSESSMENTS, SPECIAL
Payment of
deferment 3.16.030
installment 3.16.020
Policy adopted 3.16.010
CENTRAL EQUIPMENT AND STORES AGENCY 2.24.030
CREATED 2.24.010
DIRECTOR, APPOINTED, DUTIES 2.24.020

FIRE

See also FIRE DEPARTMENT
ALARM
False, prosecution 9.04.010
Imitating, prosecution 9.04.020
PREVENTION CODE See FIRE PREVENTION CODE
PROTECTION SERVICE See FIRE DEPARTMENT
See WATER

FIREARM

DISCHARGE PROHIBITED, WHEN 9.32.025

FIRE DEPARTMENT

BUILDING INSPECTOR ASSISTANCE, WHEN 16.04.210
BUREAU OF FIRE PREVENTION See FIRE PREVENTION CODE
CHIEF
Alcohol beverage license action 5.28.020
Electrical inspector duties 16.24.030
Fire prevention bureau role 16.32.020
Responsibilities generally 2.28.010
EMERGENCY EMPLOYMENT AUTHORIZATION 2.28.030
MOBILE HOME INSPECTION 16.12.050
ORGANIZATION 2.28.020
SALARIES, CLASSIFICATIONS 2.28.040
SERVICE OUTSIDE CITY AUTHORIZATION 2.28.060
SUPERVISION 2.28.010

FIRE PREVENTION CODE

ADOPTION 16.32.010
BUREAU OF FIRE PREVENTION
Chief, defined 16.32.030
Definitions 16.32.030
Established 16.32.020
BURNING CONDITIONS 16.32.015
FIRE DEPARTMENT CHIEF DEFINED 16.32.030
FIRE PERFORMANCES 16.32.017
INSPECTIONS, FREQUENCY OF 16.32.035
INSPECTORS APPOINTED, WHEN 16.32.040
SMOKE DETECTOR REQUIREMENTS 16.32.050
STORAGE TANKS 16.32.055
VIOLATION, PENALTY 16.32.060

FIREWORKS

See also EXPLOSIVES
DEFINITION 9.32.010
DISCHARGING, PROHIBITED 9.32.025
PERMIT FEE--CONDITIONS--TERM 9.32.023
PROHIBITED 9.32.020
PYROTECHNIC COMPOSITION DEVICE VENDOR PERMIT 9.32.022
SALE TO MINORS PROHIBITED 9.32.024
VIOLATION, PENALTY 9.32.030

FLOODPLAIN

See BUILDING CODE
See ZONING

FORESTER, CITY **See** **TREE**

FOR-HIRE VEHICLE

DRIVER, LICENSE REQUIRED 5.54.060
FAILURE TO PAY FARE 9.79.010
IDENTIFICATION REQUIRED 5.54.050
INSURANCE REQUIRED 5.54.040
LICENSE
Application 5.54.070
Fee 5.54.080 Issuance conditions 5.54.020
Required 5.54.010
Revocation
authorization 5.54.090
grounds 5.54.100
VIOLATION, PENALTY 5.54.100

FORTUNETELLING

PROHIBITED 5.16.010
VIOLATION, PENALTY 5.16.020

FRATERNITY HOUSE **See** **ZONING**

FUND See Specific Fund

FURNITURE

IMPROPER OUTSIDE STORAGE OF 8.32.235

FRAUD ON RESIDENTIAL LANDLORDS

APPLICABILITY 9.77.020
PENALTY 9.77.030
UNLAWFUL ACTS DEFINED 9.77.010

- G -

GAMBLING

DEVICE
Prohibited 9.44.010
Seizure, destruction 9.44.030
HOUSE
Prohibited 9.44.010
Right of entry 9.08.030
VIOLATION
Fine 9.44.020
Imprisonment, when 9.44.040

GARAGE **See** **ZONING**

GARBAGE See **MANAGEMENT OF WASTE AND RECYCLABLES**

GAS See **ZONING**

GASOLINE See **ZONING**

GENERAL PENALTY See **PENALTY, GENERAL**

GOLF COURSE See **ZONING**

GRAFFITI

ABATEMENT OF 9.65.070
DEFINED 9.65.020
FAILURE TO ABATE--PUBLIC NUISANCE 9.65.080
LIABILITY 9.65.050
NOTICE TO POLICE DEPARTMENT 9.65.060
OTHER METHODS NOT EXCLUDED 9.65.090
PROHIBITED 9.65.040
PUBLIC NUISANCE 9.65.030
PURPOSE 9.65.010
VIOLATION--PENALTY 9.65.100

GRAVEL PIT See **ZONING**

- H -

HALF MOON BEACH See **PARK**

HANDBILL See **ADVERTISING**

HAWKER See **DIRECT SELLERS**

HEALTH

COAL DUST, EXPOSURE TO WIND 8.40.130
DEPARTMENT
Established 2.52.020
Food, drink inspection authority 8.40.080
Inspection, right of entry 8.40.090
Inspection duties generally 8.40.150
Statutes adopted 8.40.010
DISEASE, CONTAGIOUS
Food handling, statutes adopted 8.04.030
Quarantine, statutes adopted 8.04.020
Report of cases, statutes adopted 8.04.010
NOXIOUS GASES, ODORS PROHIBITED 8.40.140
OFFICER See HEALTH OFFICER
PREMISES INSPECTION, RIGHT OF ENTRY 8.40.090
PROVISIONS
Enforcement, police, inspector duties 8.40.150
Violation, penalty 8.40.160
RUBBER BURNING REGULATIONS 8.40.120

SANITARY REGULATIONS
Food, drink examination 8.40.080
Food processing, storage buildings 8.40.060
Odorous premises prohibited 8.40.040
Privy cleaning 8.40.050
Rubbish disposal 8.40.030
Secondhand goods, clean before sale 8.40.100
Streets, prohibited materials 8.40.020
Violation, penalty 8.40.160
SMOKE, DENSE, NUISANCE WHEN 8.40.110

HEALTH, BOARD OF

BOARD OF HEALTH 2.52.030
BUDGET; APPROPRIATION; FUND 2.52.070
DEFINITIONS 2.52.010
DIRECTOR 2.52.060
HEALTH DEPARTMENT ESTABLISHED 2.52.020
POWERS AND DUTIES 2.52.040
REGULATIONS 2.52.050

HEALTH OFFICER

DEFINED 8.16.010
FERMENTED MALT BEVERAGE LICENSE ACTION 5.28.070
HOUSING
Advisory board, role 16.08.140
Appeals duties 16.08.150
Inspection authorization, action 16.08.130
INTOXICATING LIQUOR LICENSE ACTION 5.30.050
MOBILE HOME INSPECTION 16.12.050
RESTAURANT INSPECTION, REPORT 8.16.070
ROOMING HOUSE LICENSE ACTION 16.08.160
UNFIT DWELLING CONDEMNATION ACTION 16.08.170

HEATING, VENTILATING, AND AIR CONDITIONING (HVAC) CODE

BOARD OF HEATING EXAMINERS
Appeals 16.28.090
Appointment 16.28.070
Created 16.28.050
Duties 16.28.090
Membership 16.28.060
Terms 16.28.080
CODES
Adopted 16.28.160
On file 16.28.270
CONNECTIONS, PROHIBITED 16.28.180
DEFINITIONS 16.28.040
ENFORCEMENT 16.28.200
EQUIPMENT TESTING
Leaks 16.28.230
Procedure 16.28.220
Required 16.28.210

HEATING INSPECTOR
Appointed 16.28.100
Created 16.28.100
Disconnection orders 16.28.250
Duties 16.28.110
Existing buildings--unsafe orders 16.28.140
Inspections 16.28.120
Power to deem unsafe 16.28.130
Right of entry 16.28.240
Qualifications 16.28.110
INSTALLATIONS
Gas pipe 16.28.170
Prohibited 16.28.190
LIABILITY, MUNICIPAL 16.28.260
PERMIT FEES -- HEATING, VENTILATING AND COOLING INSTALLATION 16.28.150
PURPOSE 16.28.020
SCOPE 16.28.030
TITLE 16.28.010
VIOLATIONS--PENALTIES 16.28.280

HEATING, VENTILATING, AND AIR CONDITIONING (HVAC) CONTRACTOR

INSURANCE REQUIRED 5.22.040
LICENSE
Application 5.22.020
Fee, examination 5.22.030
Issuance 5.22.050
Required, classification 5.22.010
Suspension, revocation
notice, hearing 5.22.070
when 5.22.060

HEATING INSPECTOR See HEATING CODE

HISTORICAL SITE See LANDMARK

HORSE See ZONING

HOSPITAL See ZONING

HOTEL See ZONING

HOTEL & MOTEL GUEST REGISTRATION

DEFINITIONS 8.18.020
OTHER METHODS NOT EXCLUDED 8.18.080
PENALTY 8.18.090
PUBLIC NUISANCE 8.18.070
PURPOSE 8.18.010
REFUSAL OF ACCOMMODATION 8.18.050
REGULATIONS 8.18.030
RESPONSIBILITY OF GUESTS 8.18.040
RESPONSIBILITY OF OWNER 8.18.060

HOUSE

MOVING See BUILDING
NUMBERING See STREETS AND SIDEWALKS

HOUSING

CODE See HOUSING CODE
FAIR
Accommodation defined 9.16.010
Acts prohibited 9.16.030
Definitions 9.16.010
Discrimination defined 9.16.010
Exemptions 9.16.040
Housing defined 9.16.010
Opportunities Commission 2.67
Purpose 9.16.020
References, requiring permitted 9.16.050
Violation, penalty 9.16.060

HOUSING CODE Chapter 16.08

ABANDONED DWELLINGS
Defined 16.08.060
Inspections 16.08.150
APPEARANCE 16.08.140
APPLICABILITY 16.08.050
APPROVED DEFINED 16.08.060
ASBESTOS DEFINED 16.08.060
BASEMENT DEFINED 16.08.060
BATHROOM
Defined 16.08.060
Requirements 16.08.080
BUILDING
Defined 16.08.060
Substandard, Defined 16.08.060
Finding, Declared 16.08.020
DECLARATION OF NECESSITY 16.08.020
DEFINITIONS 16.08.060
DETERIORATION DEFINED 16.08.060
DILAPIDATED DEFINED 16.08.060
DORMITORY
See also ROOMING
Defined 16.08.060
DWELLING
Defined 16.08.060
Multiple, Defined 16.08.060
Unit, Defined 16.08.060
Unfit
condemnation procedure 16.08.170
defined 16.08.060
minimum requirements 16.08.070
ENFORCEMENT, NOTICE, HEARING 16.08.200
EVICTION, RETALIATORY PROHIBITED 16.08.180
EXTERMINATION DEFINED 16.08.060
FACILITIES MAINTENANCE
Safety 16.08.090
Sanitary 16.08.070

FRIABLE ASBESTOS DEFINED 16.08.060
GRADE DEFINED 16.08.060
GUEST DEFINED 16.08.060
HEATING
Minimum requirements 16.08.080
System, central, defined 16.08.060
HOUSEHOLD DEFINED 16.08.060
HOUSING
Advisory board
defined 16.08.060
enforcement 16.08.200
powers, duties 16.08.190
Inspector
defined 16.08.060
duties 16.08.150
Housing Opportunities Commission 2.67
Temporary, defined 16.08.060
INFESTATION DEFINED 16.08.060
INSPECTION 16.08.170
INTERPRETATION 16.08.010
KITCHEN Defined 16.08.060
Requirements 16.08.060
LIGHT System 16.08.100
OCCUPANCY
Defined 16.08.060
Duties 16.08.070
OWNER
Defined 16.08.060
Duties 16.08.070
PEST management 16.08.120
PLUMBING
Defined 16.08.060
Requirements 16.08.080
PREMISES DEFINED 16.08.060
PRIVACY DEFINED 16.08.060
PURPOSE 16.08.030
REGULATIONS 16.08.230
RESIDENT DEFINED 16.08.060
RESIDENTIAL TENTAL DWELLING UNIT Registration 16.08.160
ROOM
Defined 16.08.060
Habitable, defined 16.08.060

SHORT TITLE 16.08.040
SPACE HEATER DEFINED 16.08.060
STRUCTURE, ACCESSORY DEFINED 16.08.060
SUMMER CONDITIONS, Air Conditioning 16.08.110
UNSANITARY CONDITION DEFINED 16.08.060
VENTILATION
Defined 16.08.060
Requirements 16.08.110
VIOLATION, PENALTY 16.08.200
WATER
Hot, Heated 16.08.080
WINTER CONDITIONS Heat 16.08.110

HUMAN RESOURCES DEPARTMENT

CREATED 2.70.010
DIRECTOR APPOINTED, POWERS, DUTIES GENERALLY 2.70.020

HUNTING

BOW HUNTING OF DEER ALLOWED CONDITIONALLY 9.32.030
CITY PROPERTY, PROHIBITED ON 9.30.020
DEFINITIONS 9.30.010
HUNTING 6.25.010
PENALTY 9.30.030
PROHIBITED GENERALLY 9.32.030

- I -

ICE CREAM VENDORS

SALE OF GOODS PROHIBITED 13.12.060

INOPERATIVE MOTOR VEHICLE

DEFINITIONS 8.36.010
NOTICE OF REMOVAL 8.36.040
STORAGE--PERMITTED WHEN 8.36.030
STORAGE PROHIBITED 8.36.020
VIOLATION--PENALTIES 8.36.050

INTOXICATING LIQUOR see ALCOHOL BEVERAGE

See also CABARET LICENSE
BOATING PROHIBITIONS 9.24.060, 9.24.070
CONSUMPTION ON STREET 9.52.030
SCHOOL-SPONSORED EVENTS 9.52.020
SPECTATOR FACILITY
Container
throwing prohibited 9.50.020
Violation, penalty 9.50.030

- J -

JOBBING ESTABLISHMENT See ZONING

JUNK DEALER

AUTOMOBILE
Defined 5.24.020
Junk, defined 5.24.020
DEFINITIONS, DEFINED 5.24.020
HAULING, VEHICLE REQUIREMENTS 5.24.075
JUNK DEFINED 5.24.020
LICENSE
Additional, required when 5.24.040
Display 5.24.070
Fee 5.24.040
Filing period, conditions 5.24.050
Required 5.24.030
Revocation, hearing 5.24.060
STATE STATUTES ADOPTED 5.24.010
STORAGE RESTRICTIONS 5.24.080
VIOLATION, PENALTY 5.24.090

JUNKED MOTOR VEHICLE See INOPERATIVE MOTOR VEHICLE

JUVENILES See MINORS

- K –

K-2 See Synthetic Cannabinoid Prohibited 9.375

KENNEL See PET SHOP, KENNEL

- L -

LANDMARKS

APPEALS 2.65.090
COMMISSION
Composition & Terms 2.65.030
Powers and Duties 2.65.040
CONDITIONS DANGEROUS TO LIFE, HEALTH OR PROPERTY 2.65.070
CONFORMANCE WITH REGULATIONS 2.65.060
DEFINITIONS 2.65.020
DESIGNATION PROCEDURE 2.65.050
MAINTENANCE OF 2.65.070
PURPOSE & INTENT 2.65.010
TRANSITIONAL PROVISION 2.65.100
VIOLATION, PENALTY 2.65.110

LAND USE See **ZONING**

LAWN See **ZONING**

LIBRARY

See also ZONING
ARCHIVES DEFINED 9.82.010
DEFINED 9.82.010
MATERIALS
Defined 9.82.010
Regulations generally 9.82.020
Theft prohibited 9.82.010
UNAUTHORIZED/FRAUDULENT ACCESS TO SERVICES 9.82.025
UNAUTHORIZED PRESENCE 9.82.027
VIOLATION, PENALTY 9.82.030

LICENSE

APPEAL TO CITY COUNCIL 2.16.030
ASSEMBLY 9.60.040
BUSINESS See Specific Business
CABARET 5.26.010
DIRECT SELLER 5.34
DOG, CAT 6.04.010
FERMENTED MALT BEVERAGE 5.28.100
INTOXICATING LIQUOR 5.28.110
MASSAGE ESTABLISHMENT 5.56
PET SHOP, KENNEL 6.10.020
PIGEON 6.16.020
REFUSE COLLECTION 8.32.020
RESTAURANT 8.16.020
ROOMINGHOUSE 16.08.160
TATTOO FACILITIES, TATTOO ARTISTS 5.58
TAX CLEARANCE 2.16.020
TREE REMOVAL 8.20.080

LIQUOR See **ALCOHOL BEVERAGE**, **INTOXICATING LIQUOR**

LITTERING 13.16.030

LODGE See **ZONING**

LODGINGHOUSE See **ZONING**

LOT See **ZONING**

MANAGER, CITY

ACTING CITY MANAGER 2.04.060
BEAUTIFICATION ADVISORY COMMITTEE APPOINTMENTS 2.64.020
CABLE TELEVISION
Responsibilities generally See CABLE TELEVISION
ECONOMIC DEVELOPMENT FUND REPORT 3.30.060
EMERGENCY PROCLAMATION AUTHORITY 9.88.010
EQUIPMENT PURCHASE APPROVAL 2.24.120
FINANCE DIRECTOR APPOINTMENT 2.24.020
FOR-HIRE VEHICLE LICENSE ACTION 5.54.040
HOUSING ADVISORY BOARD ACTION 16.08.140
HUMAN RESOURCES DEPARTMENT DIRECTOR APPOINTMENT 2.70.020
PARKING METER INSTALLATION SUPERVISION 10.20.080
PLAN COMMISSION PRESIDING OFFICER 2.56.020
PLANNING AND DEVELOPMENT DIRECTOR APPOINTMENT 2.54.020
POWERS OF; APPOINTMENTS 2.04.013
PROCUREMENT POLICY APPROVAL AUTHORITY 2.92.075
PUBLIC WORKS DIRECTOR APPOINTMENT 2.40.030
QUALIFICATIONS, SELECTION, REMOVAL 2.04.012
SEWER APPEALS BOARD MEMBERS APPOINTMENT 15.04.080
TRANSIT COMMISSION APPOINTMENTS 2.60.020
WEED ABATEMENT, NOTICE PUBLISHING 8.28.050

MANAGEMENT OF WASTE AND RECYCLING

ASHES DEFINED 8.32.010
ASHES DISPOSED 8.32.010
BURNING RESTRICTION 8.32.110, 16.32.015
COLLECTION BUSINESS
Annexed area, operator continuance 8.32.040
Collection service
charge 8.32.040
frequency, types 8.32.050
License
fees 8.32.020
number granted, transferability 8.32.040
refuse hauler 8.32.020, 8.32.040
required 8.32.020
revocation, suspension 8.32.040
up-the-drive 8.32.040, 8.32.050
yard waste 8.32.110
Industrial hauler See INDUSTRIAL HAULER LICENSE
Liability insurance required 8.32.020
Requirements 8.32.090
COMPOSTING 8.32.110
CONSTRUCTION/DEMOLITION
Defined 8.32.010
License 8.32.020, 8.32.080
Requirements 8.32.090
CONTAINERS, Garbage, Trash, Recycling 8.32.050, 8.32.090
Disturbance of 8.32.120
DEFINITIONS 8.32.010
DEPOSIT FOR COLLECTION 8.32.120
D.N.R. DEFINED 8.32.010
DUMPING PROHIBITED WHERE 8.32.120
FILLING REAL PROPERTY 8.32.120
FURNITURE, IMPROPER STORAGE OF 8.32.120

GOVERNMENT ENTITIES 8.32.100
HEALTH DEPARTMENT DEFINED 8.32.010
HEALTH DIRECTOR DEFINED 8.32.010
INDUSTRIAL HAULER LICENSE 8.32.060
LAWS, COMPLIANCE WITH 8.32.020
MANURE STORAGE 8.32.120
MIXED, DEFINED 8.32.010
PREPAID BAG DEFINED 8.32.010, 8.32.050
PRIVATE DUMP SITE 8.32.120
PROHIBITED PRACTICES 8.32.120
RECYCLABLES
Collection 8.32.050
License required for collection 8.32.020, 8.32.070
Materials defined 8.32.010
REFUSE ACCUMULATION, NUISANCE WHEN 8.32.120
SPECIAL COLLECTION 8.32.010, 8.32.050
TRASH
Defined 8.32.010
VEHICLE
Inspection 8.32.030
Permits 8.32.030
Requirements 8.32.090
Street use 8.32.190

VIOLATION, PENALTY 8.32.140
YARD WASTE
Defined 8.32.010
Disposal of 8.32.110
Hauling 8.32.090
Mandatory Separation of 8.32.050

MARCHES See ASSEMBLIES, PUBLIC

MARIJUANA, POSSESSION OF

Penalties 9.37.020
Possession 9.37.010
SYNTHETIC CANNABINOID PROHIBITED 9.375

MASSAGE THERAPY, FACILITIES, AND THERAPISTS

CONDUCT PROHIBITED 5.56.080
DEFINITIONS 5.56.010
EXEMPTIONS 5.56.120
INSURANCE REQUIREMENTS 5.56.055
LICENSE/PERMIT
Expiration 5.56.110
State license required 5.56.050
Denial, revocation, suspension, appeal 5.56.065
Therapy facility license required 5.56.040
ON-SITE THERAPY 5.56.035
PENALTY 5.56.090
SALE OR TRANSFER 5.56.100
THERAPY FACILITY 5.56.020
THERAPY FACILITY--OPERATION 5.56.030
VIOLATION 5.56.070

MEASURES See WEIGHTS AND MEASURES

MEETING HALL See ZONING

MERCHANT, TRANSIENT See **DIRECT SELLER**

MINIMUM WAGE

ABILITY OF EMPLOYERS TO PAY MORE THAN MINIMUM WAGE 5.63.060
APPLICABILITY OF MINIMUM WAGE 5.63.050
CADDIES 5.63.170
COMPLIANCE, DETERMINATION OF 5.63.080
DECLARATION OF POLICY 5.63.010
DEDUCTIONS AND RECORD KEEPING 5.63.120
DEDUCTIONS FOR MEALS AND LODGING 5.63.100
DEFINITIONS 5.63.020
DOMESTIC SERVICE EMPLOYMENT; CASUAL EMPLOYMENT 5.63.150
EXCEPTIONS 5.63.110
HOURS WORKED, INTERPRETATION OF 5.63.130
INTIMIDATING WITNESS, PENALTY FOR 5.63.200
MINIMUM WAGE PRESCRIBED 5.63.030
MINIMUM WAGE RATES 5.63.070
PROHIBITION OF DISPLACEMENT 5.63.140
PROOF OF PREVIOUS EMPLOYMENT 5.63.090
RECREATIONAL OR EDUCATIONAL CAMPS 5.63.160
STUDENT WORKLIKE ACTIVITIES AND EMPLOYMENT 5.63.180
SUB MINIMUM WAGE LICENSES 5.63.190
UNLAWFUL WAGES 5.63.040
VIOLATION, DEFINITION OF 5.63.210

MINOR

ALCOHOL BEVERAGES, POSSESSION, CONSUMPTION PROHIBITED 9.84.050
CIGARETTE SALE PROHIBITED 9.84.055
CIRCUIT COURT JURISDICTION 9.84.040
CURFEW 9.84.010
DEFINED 9.43.010
EXPOSURE TO HARMFUL MATERIALS
- Defenses and exemptions 9.43.030
- Definitions 9.43.010
- Unlawful acts designated 9.43.020
- Violation, penalty 9.43.040

JUVENILE SHOPLIFTING 9.84.075
LOITERING ON SCHOOL PROPERTY PROHIBITED 9.84.070
TRUANCY 9.84.045
VANDALISM PROHIBITED 9.84.060
VIOLATION
- Parent liability 9.84.030
- Sections 9.84.050, 9.84.060, 9.84.070, penalty 9.84.080
- Warning, prosecution 9.84.020

MOBILE HOME CODE

See also ZONING
COMMON AREA DEFINED 16.12.020
DEFINITIONS 16.12.020
ENFORCING AGENCY DEFINED 16.12.020
FUEL OIL DISTRIBUTION SYSTEM 16.12.110
GARBAGE COLLECTION 16.12.090
GAS DISTRIBUTION SYSTEM 16.12.100
LICENSE
- Application procedure, fee 16.12.040
- Defined 16.12.020
- Revocation, suspension 16.12.160

LICENSEE DEFINED 16.12.020
MOBILE HOME
Dependent, defined 16.12.020
Defined 16.12.020
Nondependent, defined 16.12.020
Park See PARK
Stand, defined 16.12.020
OPEN SPACE DEPTH DEFINED 16.12.020
PARK
Defined 16.12.020
Design
specifications 16.12.060
standards generally 16.12.030
Existing, effect of regulations 16.12.170
Inspection 16.12.050
License See LICENSE
Management, responsibility 16.12.130
Resident, responsibility 16.12.140
Service building specifications 16.12.120
POWER SUPPLY ASSEMBLY DEFINED 16.12.020
PURPOSE, SCOPE 16.12.010
SECTIONAL HOME DEFINED 16.12.020
SEWER
Connection, defined 16.12.020
System requirements 16.12.080
SITE DEFINED 16.12.020
STRUCTURE, ACCESSORY, DEFINED 16.12.020
VIOLATION, PENALTY 16.12.150
WATER
Connection, defined 16.12.020
Riser pipe, defined 16.12.020
Supply, distribution system 16.12.070

MORTUARY See ZONING

MOTOR SCOOTERS See SCOOTERS, MOTOR

MOVIE HOUSE See THEATER

MUSEUM See ZONING

- N -

NOISE

ALARM, FALSE 9.04.010, 9.04.020
AMPLIFYING EQUIPMENT 9.56.070, 9.56.080
ASSEMBLY, RESTRICTED 9.60.070

NUDE DANCING

AUTHORITY AND PURPOSE 8.07.010
DEFINITIONS 8.07.020
EXEMPTIONS 8.07.040
PENALTIES 8.07.050
PROHIBITED IN LICENSED ESTABLISHMENTS 8.07.030
SEVERABILITY 8.07.060

NUISANCE, PUBLIC

ALLOWING, UNLAWFUL 9.36.010
FENCE, WHEN 9.64.020
GARBAGE ACCUMULATION 8.32.230
SMOKE, DENSE, WHEN 8.40.110
TREE
    Abatement 8.20.070
    Designated 8.20.100
VIOLATION, PENALTY 9.36.020

- O -

OBSCENE MATERIALS AND SUPPLIES

DEFINITION 9.24.010
PENALTY 9.24.030
PROHIBITION 9.24.020

OCCUPANCY

ENFORCEMENT 9.35.040
REQUIREMENTS 9.35.010
UNLAWFUL TO OVERPOPULATE BUILDINGS 9.35.020
UNLAWFUL USE OF PLACARD 9.35.030
VIOLATION--PENALTY 9.35.050

OFFICER, CITY

See Specific Officer
see EMPLOYEE, CITY

OFF-STREET PARKING

See PARKING
See ZONING

OIL See ZONING

ORDINANCE

CODE REFERENCES, EFFECT 1.01.070
CONSTRUCTION 1.04.080
DEFINED 1.04.010
EFFECTIVE DATE 1.04.060
INTRODUCTION, PASSAGE 2.08.120
NUMBERING 2.08.140
PASSED PRIOR TO CODE ADOPTION 1.01.040
PUBLICATION OF 1.04.110
READING 2.08.130
REPEAL, EFFECT 1.04.090
SEVERABILITY, INVALIDITY 1.04.050

- P -

PALMISTRY See FORTUNETELLING

PARKS

See also ZONING
ACTIVITIES, HAZARDOUS, PROHIBITED 9.76.110
ANIMAL
Dog, horse 9.76.150
Wildlife protected 9.76.120
ASSEMBLY 9.76.170
BOULEVARD DEFINED
Area defined 10.24.010
Defined 10.24.010
CAMPING 9.76.130
COMMERCIAL ENTERPRISES REGULATED 9.76.100
FIRE PERFORMANCES 16.32.017
GAMES RESTRICTED 9.76.090
HAZARDOUS ACTIVITIES 9.76.110
HALF MOON BEACH
Loitering 9.76.060
HOURS 9.76.167
INTOXICANTS PROHIBITED 9.76.165
LITTERING 9.76.080
MOTORIZED EQUIPMENT GENERALLY 9.76.210
POOL, CITY SWIMMING
Presence after hours 9.76.175
PROPERTY, DEFACING, REMOVING 9.76.070
SKATEBOARDS, ROLLER SKATES, ROLLER SKIS, IN-LINE SKATES OR SIMILAR EQUIPMENT
Permitted where 9.76.055
SNOWMOBILE
Use restricted 9.76.190
Violation, penalty 9.76.200
SWIMMING 9.76.140
TRAFFIC
One-way drives
designated 9.76.020
Putnam Drive 9.76.030

Restrictions 9.76.010
Signs 9.76.050
Speed limit 9.76.040
VIOLATION, PENALTY 9.76.180

PARKING

See also TRAFFIC
See also ZONING
ALTERNATE SIDE PARKING
General provisions 10.38.010
Violation, penalty 10.38.030
BUS TRANSFER STATION 10.40.180
CITATION 10.40.130
HEAVY VEHICLES 10.24.015
LOT See UNMETERED LOT
METER
Coin substitutes prohibited 10.20.030
Defacement, destruction 10.20.040
Lot, ramp, street, municipal 10.20.080
Moneys collected, use 10.20.050
Space, coin deposit 10.20.010
Use time 10.20.020
Violation, continued 10.20.090
Waiver 10.20.095
OVERTIME, PROHIBITED 10.20.070
PARKLET and PARKLET CAFÉ 13.12.063
PHYSICALLY DISABLED PERSONS 10.24.020
PROHIBITED IN SPECIFIC PLACES 10.24.010
PROVISIONS CONSTRUCTION 10.20.060
RAMP, UNMETERED 10.20.100
REGULATIONS, SPECIAL 10.12.020
SCHOOL LOTS, REGULATIONS 10.40.055
UNLAWFULLY PARKED VEHICLES, REMOVAL OF 10.12.060
UNMETERED LOT
Hours, rates designated 10.20.100
Violation, penalty 10.20.110

PARKING LOT SURFACES See BUILDING CODE

PARKS AND RECREATION DEPARTMENT

DIRECTOR
Defined 8.20.030
Forester, city, appointment 8.20.040
Municipal bond supervision 2.80.010
DIVISIONS 2.32.010
SUPERINTENDENT
Office created 2.32.020
Operation, maintenance responsibility 2.32.040
Personnel supervision 2.32.030

PAWNBROKERS

DEFINITIONS 5.04.020
INSPECTION OF ITEMS 5.04.030
LICENSE
Application 5.04.070
Denial, suspension, revocation 5.04.140
Display 5.04.060
Fees 5.04.150
Issuance 5.04.090
Investigation of applicant 5.04.080
Required 5.04.010
PENALTY 5.04.160
PROHIBITED ACTS 5.04.130
PURPOSE 5.04.010
REQUIREMENTS 5.04.100
Label required 5.04.120
Receipt required 5.04.110
SEVERABILITY 5.04.170

PEDDLER See DIRECT SELLER

PENALTY, GENERAL

AIDING AND ABETTING ORDINANCE VIOLATIONS 1.16.020
CITATION
Form, contents 1.24.020
Deposit schedule 1.24.030
Issuance authorized when 1.24.040
Method 1.24.010
Nonexclusive 1.24.060
Procedure 1.24.050
GENERAL CODE PENALTY 1.16.010
IMPRISONMENT
Authorized when 1.16.040
Indigent, not authorized 1.16.050
VIOLATION NOT MISDEMEANOR 1.16.030

PERMIT

BUILDING 16.04.080
BUILDING MOVER 5.20.030
BUILDING SEWER 15.08.060
DIRECT SELLERS 5.34.040
ELECTRICAL WIRING 16.24.100
EXPLOSIVES 9.28.010
MARQUEE INSTALLATION 16.16.080
MASSAGE PRACTITIONER 5.56.050
PARADE 9.60.160

REFUSE COLLECTION VEHICLE 8.32.070, 8.32.090
ROOMINGHOUSE 16.08.160
SIGN ERECTION 16.16.040
STREET, SIDEWALK EXCAVATION 13.08.010
TREE PLANTING, TREATMENT, REMOVAL 8.20.050
WATER CONNECTION 14.04.060

PERSONNEL See EMPLOYEE, CITY

PET SHOP, KENNEL

DEFINED 6.10.010
LICENSE
Required, application, term 6.10.020
Suspension, revocation 6.10.040
OPERATION REQUIREMENTS 6.10.030
STATE LAW ADOPTED 6.10.015
VIOLATION, PENALTY 6.10.050

PHOTOGRAPHER, TRANSIENT

DEFINED 5.40.010
LICENSE
Application, bond 5.40.040
Fee 5.40.030
Required, issuance 5.40.020
Transferability 5.40.050
VIOLATION, PENALTY 5.40.060

PIERCING, BODY See TATTOOING AND BODY PIERCING

PIGEON See ANIMAL

PLAN COMMISSION

See also ZONING
CHAIRPERSON, ELECTION OF 2.56.025
COMPOSITION 2.56.020
CREATED 2.56.010
EMPLOYEE, TEMPORARY USE OF EXPERTS 2.56.080
MEMBER
Appointment 2.56.030
Compensation, oath 2.56.050
Vacancy, effect 2.56.040
ORGANIZATION, RECORDS, QUORUM 2.56.070
POWERS, DUTIES 2.56.060
RULES 2.56.090
SUBDIVISION
Final plat consideration 17.20.020
Preliminary plat consideration 17.16.020

PLANNING AND DEVELOPMENT DEPARTMENT

See COMMUNITY DEVELOPMENT DEPARTMENT

PLANNING AND DEVELOPMENT DIRECTOR

APPOINTMENT, DUTIES 2.54.020
PLANNING AND DEVELOPMENT DEPARTMENT SUPERVISION 2.54.010

PLAYGROUND See ZONING

PLUMBING CODE

ADOPTED, REGULATIONS 15.08.030

PLUMBING INSPECTOR

CONNECTION, SHUTOFF LOCATION, RECORDATION 14.04.050
SERVICE INSTALLATION SUPERVISION 14.04.060

PLUMBING SUPERINTENDENT

POWERS, DUTIES See PLUMBING SUPERVISOR

PLUMBING SUPERVISOR

APPOINTMENT, DUTIES 15.08.030
DEFINED 15.04.020
POWERS, DUTIES 15.08.040
SEWER CONNECTION RECORDKEEPING 15.08.060

POLICE CHIEF See POLICE DEPARTMENT

POLICE DEPARTMENT

AIRPORT SECURITY POLICE APPOINTMENT 2.36.090
ARREST PROCEDURE, SUMMARY 9.56.020
ASSISTING, REFUSAL 9.08.020
BOATING REGULATION ENFORCEMENT 9.24.100
CHIEF
- Alcohol beverage license action 5.28.020
- Emergency proclamation authority, when 9.88.030
- Massage technician permit applicant investigation 5.56.050
- Pawnbroker property action 5.32.050
- Peace, morals enforcement 9.08.010
- School police appointment 10.40.050
- Special traffic regulations, prescription authorization 10.12.020
- Supervision responsibility 2.36.070

EMERGENCY EMPLOYMENT AUTHORIZATION 2.36.020
FINE PAYMENT RECEIPT
Authorization 2.36.100
Delivery deadline 10.40.150
Procedure 2.36.100 10.40.140
FINGERPRINTING FEE 2.36.095
HEALTH, SANITATION PROVISIONS ENFORCEMENT 8.40.150
MASSAGE THERAPY FACILITY INSPECTION, INVESTIGATION AUTHORITY 5.56.0430
MOBILE HOME INSPECTION 16.12.050
OATH OF OFFICE 2.36.015
ORGANIZATION 2.36.010
PEACE, MORALS ENFORCEMENT 9.08.010
PROPERTY, ABANDONED, DISPOSAL OF 2.36.110
RESERVE OFFICER APPOINTMENT 2.36.080
SALARIES, CLASSIFICATIONS 2.36.030
SCHOOL POLICE SUPERVISION 10.40.050
SIREN, IMITATING 9.04.020
STATE STATUTES ADOPTED 2.36.130
STREET DEBRIS REMOVAL ACTION 13.16.020
SUPERVISION 2.36.070
UNIFORM ALLOWANCE 2.36.050

POOL, BILLIARD HALL

CLOSING HOURS 5.42.055
INSPECTION 5.42.050
LICENSE
Application, procedure 5.42.020
Application, qualifications 5.42.035
Fee 5.42.030
Required 5.42.010
Revocation 5.42.065
MINORS 5.42.060
REGULATIONS COMPLIANCE REQUIRED 5.42.040
VIOLATION, PENALTY 5.42.070

POOL, CITY SWIMMING See PARKS

POULTRY, See KEEPING **OF POULTRY** 6.15

PRETREATMENT, INDUSTRIAL See SEWER

PREVAILING WAGE See **PROCUREMENT**

PRIVATE ALARM See ALARM

PROCUREMENT

APPLICABILITY 2.92.030
BIDDING
Required 2.92.100
Procedure 2.92.110
BLIND TRUST DEFINED 2.92.050
BUSINESS DEFINED 2.92.050
CENTRALIZATION 2.92.090
CITY DEFINED 2.92.050
CONFIDENTIAL INFORMATION DEFINED 2.92.050
CONSTRUCTION DEFINED 2.92.050

CONTINGENT FEES PROHIBITED 2.92.260
CONTRACT
Defined 2.92.050
Modification 2.92.160
CONTRACTOR DEFINED 2.92.050
COOPERATIVE PURCHASING
Defined 2.92.050
Procedure 2.92.155
DEBARMENT DEFINED 2.92.050
DEFINITIONS, DEFINED 2.92.050
DESIGNEE DEFINED 2.92.050
DETERMINATIONS
Filing required 2.92.040
Final 2.92.180
EMERGENCY 2.92.150
EMPLOYEE
Defined 2.92.050
Restrictions waiver 2.92.320
ETHICAL STANDARDS 2.92.220
EXCESS SUPPLIES DEFINED 2.92.050
FINANCIAL INTEREST DEFINED 2.92.050
GOOD FAITH REQUIRED 2.92.020
GRATUITY
Defined 2.92.050
Prohibited 2.92.240
IMMEDIATE FAMILY DEFINED 2.92.050
INFORMATION
Confidential, use restricted 2.92.270
Public access 2.92.280
INVITATION FOR BIDS DEFINED 2.92.050
KICKBACK See GRATUITY
POLICY APPROVAL AUTHORITY 2.92.075
PREVAILING WAGE
On building or work financed in whole or in part with city financial assistance 2.92.210
Regulation of public work 2.92.215
PROPOSAL PERMITTED WHEN, PROCEDURE 2.92.120
PROTESTED AWARDS, RESOLUTION 2.92.195
PURCHASING AGENT
Appointment 2.92.060
Defined 2.92.050
Delegation of authority 2.92.080
Powers, duties generally 2.92.070
PURPOSE OF PROVISIONS 2.92.010
REQUEST FOR PROPOSALS DEFINED 2.92.050
RESPONSIBLE BIDDER DEFINED 2.92.050
RESPONSIVE BIDDER DEFINED 2.92.050
SERVICES DEFINED 2.92.090
SMALL PURCHASE PROCEDURE 2.92.130
SOLE SOURCE CONTRACT 2.92.140
SOLICITATION CANCELLATION 2.92.170
SPECIFICATIONS
Defined 2.92.050
Designated 2.92.190
SUPPLIES
Defined 2.92.050
Management 2.92.200
Surplus, defined 2.92.050

SUSPENSION DEFINED 2.92.050
USING DEPARTMENT DEFINED 2.92.050
VIOLATION
Remedy
against employee 2.92.290
against nonemployee 2.92.300
Value recovery 2.92.310

PROFESSIONAL OFFICE See ZONING

PROPERTY

ABANDONED REFRIGERATOR See REFRIGERATOR
DAMAGE TO
Damage to property 9.63.010
Liability 9.63.020
Penalty 9.63.030
DAMAGING
Generally, penalty 9.68.020
Park 9.76.070
Sidewalks
defacing 9.68.050
spitting on 9.68.040
Wells, cisterns, penalty 9.68.010
DEFINED 1.04.010
PERSONAL, DEFINED 1.04.010
REAL, DEFINED 1.04.010
HOUSE
Keeping prohibited 9.48.010
Right of entry 9.08.030
PENALTY, ENFORCING 9.48.020

PUBLIC WORKS DEPARTMENT

CITY COUNCIL ROLE 2.40.020
CREATED 2.40.010
DIRECTOR
Appointed 2.40.030
Refuse disposal site rules promulgated 8.32.110
Special traffic regulation promulgation 10.12.020
DIVISIONS DESIGNATED, SUPERVISION 2.40.040

- R -

RADIO See ZONING

RAILROAD

See also ZONING
FLAGMEN REQUIRED 10.32.060
OBSTRUCTING STREET CROSSING
More than one train 10.32.040
Operating 10.32.020

Passenger receiving, discharge 10.32.030
Standing 10.32.010
Violation, penalty 10.32.050
SWITCHES, UNLAWFUL
Penalty, violation 10.32.080
Regulation 10.32.010

RECORDS, PUBLIC See CITY

RECREATION

See PARKS AND RECREATION DEPARTMENT
See ZONING

RECYCLING

CONTAINERS 8.32.050, 8.32.090
FEES AND REPORTING 8.32.040
LICENSE REQUIRED 8.32.050
MANDATORY COLLECTION 8.32.021
MATERIALS
Materials defined 8.32.010
Placement of materials 8.32.050, 8.32.090
RECYCLABLE HAULERS 8.32.020, 8.32.032
SEPARATION, 8.32.050, 8.32.120
VEHICLES, 8.32.030, 8.32.090

REFRIGERATOR

ABANDONED, DOOR, LATCH REMOVAL 9.20.010
ABANDONED, VIOLATION 9.20.020

REFUSE- SEE MANAGEMENT OF WASTE and RECYCLING. Repealed and recreated Ord 7010.

RENT ABSCONDING See FRAUD ON RESIDENTIAL LANDLORDS

RESTAURANT

See also ZONING
ADULTERATION DEFINED 8.16.010
APPROVED DEFINED 8.16.010
DEFINED 8.16.010
DEFINITIONS, DEFINED 8.16.010
EMPLOYEE
- Defined 8.16.010
- Disease control 8.16.290
- Infection suspected, procedure 8.16.300
- Regulations 8.16.240

FOOD, DRINK EXAMINATION 8.16.060
FOOD SERVICE ESTABLISHMENT DEFINED 8.16.010
HEALTH OFFICER DEFINED 8.16.010
INSPECTION, REPORT 8.16.070
ITINERANT
- Defined 8.16.010
- Sanitation requirement 8.16.260

LICENSE
- Application 8.16.020
- Display 8.16.050
- Fee 8.16.030
- Reinstatement 8.16.280
- Suspension, revocation 8.16.040

OPERATION, CONFORMANCE WITH REQUIREMENTS 8.16.270
POTENTIALLY HAZARDOUS FOOD DEFINED 8.16.010

SANITATION
Door, window requirement 8.16.110
Employee cleanliness 8.16.240
Floor 8.16.090
Food, drink
storage, display 8.16.230
wholesomeness 8.16.220
Generally 8.16.080
Itinerant See ITINERANT
Lighting 8.16.120
Manual, adoption 8.16.310
Miscellaneous 8.16.250
Refrigeration 8.16.210
Toilet facilities 8.16.140
Utensils, equipment
cleaning 8.16.180
construction 8.16.170
storage, handling 8.16.190
Ventilation 8.16.130
Wall, ceiling, requirement 8.16.100
Waste disposal 8.16.200
Water supply 8.16.150
STATE STATUTES ADOPTED 8.16.320
UTENSILS
Defined 8.16.010
Sanitation See SANITATION
VIOLATION, PENALTY 8.16.330

RETAIL THEFT See THEFT, RETAIL

RETIREMENT FUND

ENACTMENT 2.76.010

REVENUE See FINANCE

REVIEW BOARD

COMPOSITION 2.48.010
SESSIONS 2.48.020

RIGHT OF ENTRY

ILLEGAL PREMISES 9.08.030

ROLLER SKATING RINK

CLOSING HOURS 5.48.080
DEFINED 5.48.010
LICENSE
Display 5.48.040
Fee 5.48.030

Required 5.48.020
Revocation 5.48.050
PROHIBITIONS 5.48.070
REGULATIONS COMPLIANCE REQUIRED 5.48.040
STANDARDS 5.48.060
VIOLATION, PENALTY 5.48.090

ROOM TAX

ADMINISTRATION 3.20.030
ALLOCATION OF TAX COLLECTED 3.20.025
CONFIDENTIALITY
Responsibility 3.20.170
Who may have access to information 3.20.160
DEFINITIONS 3.20.010
FIELD AUDIT 3.20.090
GROSS RECEIPTS DEFINED 3.20.010
HOTEL DEFINED 3.20.010
INTEREST RATE 3.20.110
LEVY 3.20.020
MOTEL DEFINED 3.20.010
OFFICE AUDIT 3.20.080
PAYMENT, RESPONSIBILITY 3.20.070
PERMIT
Application, fee 3.20.040
Issuance, display 3.20.050
Revocation, suspension 3.20.060
RATE 3.20.020
RECORDKEEPING 3.20.150
RETURNS
Delinquent, fee 3.20.120
Evasion, negligence 3.20.130
Failure to file 3.20.100
Generally 3.20.030
SECURITY DEPOSIT 3.20.140
SUCCESSOR, LIABILITY FOR PAYMENT 3.20.070
TRANSIENT DEFINED 3.20.010
VIOLATION, PENALTY 3.20.180
WAIVER OF INTEREST, PENALTY, LATE FEE 3.20.135

- S -

SANITATION

See HEALTH
See ZONING

SCHOOL

See also PARKING
See ZONING
INTOXICATING LIQUOR, CONSUMPTION See INTOXICATING LIQUOR
SMOKING ON SCHOOL GROUNDS 9.38.015
UNAUTHORIZED PRESENCE PROHIBITED 9.76.220

SCOOTERS, MOTOR

DEFINITION 10.09.010
OPERATION 10.09.020
PARKING 10.09.060
RESPONSIBILITY OF PARENT OR GUARDIAN 10.09.070
RIGHT OF WAY 10.09.030
RULES, SPECIAL 10.09.040
SIGNS 10.09.050

SCOOTER SHARE 5.65

SERVICES See ZONING

SEWER and SEWERAGE

PRETREATMENT, INDUSTRIAL
Bypass 15.08.050
Charges to industry 15.12.030
Confidentiality 15.12.130
Discharge, accidental 15.12.040
Enforcement 15.12.140
General 15.12.010
Intent, notice of 15.12.060
Penalty 15.12.150
Permit
application and issuance 15.12.080
conditions 15.12.090
modifications 15.12.090
wastewater discharge 15.12.070
Premises, entry of 15.12.120
Reporting requirements 15.12.110
Standards 15.12.020

SEWER REGULATIONS
Building sewers and connections 15.08.060
Definitions 15.08.020
Administrative Code definitions 15.08.010
Disposal--septage and holding tank waste 15.08.055
Inspections--procedure 15.08.033
Penalty 15.08.100
Plumbing code 15.08.030
Plumbing supervisor or superintendent--powers and authority 15.08.090
Power to deem unsafe 15.08.037
Private sewage disposal 15.08.050
Prohibitions--general discharge 15.08.070
Sanitary sewer, connection to 15.08.040
Service outside corporate limits 15.08.045
System or plant--damage to 15.08.080

SEWERAGE SERVICE CHARGE
Billing and collection 15.04.120
Charge
Based upon water consumption 15.04.040
Minimum 15.04.120
Consumption not yet determined, measurement of 15.04.060
Estimate by city 15.04.070
Seasonal 15.04.090
Wastewater 15.04.030
Wholesale 15.04.035
Winter quarter 15.04.060
Definitions 15.04.020
General 15.04.010
Installation--meter equipment 15.04.050
Occupancy change regulations 15.04.110
Officials--duties and powers 15.04.130
Water bill estimate 15.04.100

SHOPLIFTING, JUVENILE See MINORS

SHORELAND-WETLANDS

ABROGATION AND GREATER RESTRICTIONS 18.95.060
ADMINISTRATIVE PROVISIONS 18.95.120
AMENDING SHORELAND-WETLAND ZONING REGULATIONS 18.95.140
BOARD OF APPEALS 18.95.130
COMPLIANCE 18.95.040
DEFINITIONS 18.95.030
ENFORCEMENT AND PENALTIES 18.95.150
FINDINGS OF FACT AND PURPOSE 18.95.020
INTERPRETATION 18.05.070
MUNICIPALITIES AND STATE AGENCIES REGULATED 18.95.050
NONCONFORMING STRUCTURES AND USES 18.95.110
PERMITTED USES 18.95.090
PROHIBITED USES 18.95.100
STATUTORY AUTHORIZATION 18.95.010
ZONING DISTRICT 18.95.080

SHOW, PUBLIC See PERFORMANCE, PUBLIC

SHRUBS See TREE

SIDEWALKS

DEFERRAL OF INSTALLATION 13.04.020
DESIGN & CONSTRUCTION 13.04.030
INSTALLATION - GENERAL 13.04.010
MATERIALS ON
Cleaning of snow and ice required 13.20.010
Articles for delivery 13.20.020
PLATS APPROVED AFTER NOV. 1, 1974 17.12.280
PUBLIC ART ENCROACHMENT 9.76.230, 9.65.020

SIGNS, ON-PREMISE

See also ZONING
ADMINISTRATION AND ENFORCEMENT 16.16.020
APPEAL AUTHORITY 16.16.160
CONFLICTING CODES AND ORDINANCES 16.16.200
DEFINITIONS 16.16.030
INTERPRETATION 16.16.190
LICENSING AND INSURANCE REQUIREMENTS 16.16.170
MAINTENANCE AND REPAIR 16.16.060
NON-CONFORMING 16.16.140
PERMITS 16.16.040
PERMITS NOT REQUIRED 16.16.050
PROHIBITED 16.16.130
PROVISIONS FOR SIGNS BY ZONING DISTRICT 16.16.080
PURPOSE AND INTENT 16.16.010
REMOVAL OF CERTAIN SIGNS 16.16.150
REQUIREMENTS BY TYPE OF SIGN 16.16.070
SCOPE 16.16.005
SIGNS EXEMPT FROM SIGN PERMITS 16.16.120
SIGNS NOT REGULATED BY ORDINANCE 16.16.180
SPECIAL DISTRICT SIGN REGULATIONS 16.16.090
SPECIAL USE SIGNING 16.16.100
TEMPORARY 16.16.110
VESTED RIGHT 16.16.210
VIOLATIONS AND PENALTIES 16.16.220

SIGNS, POSTER PANEL

ADMINISTRATION AND ENFORCEMENT 16.18.020
CONFLICTING CODES AND ORDINANCES 16.18.110
DEFINITIONS 16.18.030
GENERAL PROVISIONS 16.18.060
INTERPRETATION 16.18.100
LEASE OF CITY-OWNED PROPERTY 16.18.045
LICENSING AND INSURANCE REQUIREMENTS 16.18.090
NON-CONFORMING SIGNS 16.18.070
PERMITS FOR POSTER PANELS 16.18.040
PERMITS NOT REQUIRED 16.18.050
PURPOSE AND INTENT 16.18.010
REMOVAL OF SIGNS 16.18.080
VESTED RIGHT 16.18.120
VIOLATIONS AND PENALTIES 16.18.130

SITE PLANS

PLAN COMMISSION ACTION AND REVIEW CRITERIA 18.30.050
PROCEDURE 18.30.030
PURPOSE AND INTENT 18.30.010
REQUIRED, WHEN 18.30.020
SUBMITTAL REQUIREMENTS 18.30.040

SKATEBOARDS, ROLLER SKATES, ROLLER SKIS, IN-LINE SKATES, ETC.

PERMITTED WHERE 9.76.055
PROHIBITED WHERE 13.12.025

SMOKE DETECTORS See FIRE PREVENTION CODE

SMOKING

CITY BUILDINGS 9.38.012
ELECTRONIC CIGARETTE E-Cigarette, Vaping 9.38.010, 9.38.012, 9.38.015
LOCATIONS WHERE PROHIBITED 9.38.010
PROHIBITED
- Additional private prohibitions 8.05.090
- Definitions 8.05.020
- Effective date 8.05.140
- Enforcement 8.05.080
- Exceptions 8.05.060
- Liberal construction 8.05.110
- Other applicable laws or regulations 8.05.100
- Outdoor areas 8.05.050
- Penalty 8.05.120
- Places of employment 8.05.040
- Public places 8.05.030
- Purpose 8.05.010
- Severability 8.05.130
- Signs required 8.05.070

PUBLIC SCHOOL GROUNDS AND PREMISES, PROHIBITED ON 9.38.015
VIOLATION, PENALTY 9.38.020

SNOW

EMERGENCY
Declaration, notice 10.36.010
Route, parking prohibited 10.36.020
Violation
generally 10.36.030
penalty 10.36.050
removal authorization 10.36.040
REMOVAL RESPONSIBILITY 13.20.010

SNOWMOBILE

OBEDIENCE TO TRAFFIC RULES 10.04.030
REGULATION OF 10.40.160

SPECIAL EVENTS

ALCOHOL SALES 9.59.060
APPEAL 9.59.120
CONCESSION SALES 9.59.070
DEFINITIONS 9.59.010
EXCEPTIONS 9.59.015
LIABILITY AND INSURANCE 9.59.110
NOISE 9.59.080
PARKS--PUBLIC GROUNDS 9.59.090
PERMIT
Application 9.59.040
Required 9.59.020
Review and approval 9.59.030
PURPOSE 9.59.005
SPECIAL EVENT FEES 9.59.050
STREETS AND SIDEWALKS 9.59.100
VIOLATION--PENALTY 9.59.140

SOLICITOR 5.36 Repealed by ordinance #4394, August 24, 1983. **See DIRECT SELLER**

SORORITY HOUSE See ZONING

SQUIRREL See ANIMAL

STORMWATER MANAGEMENT SERVICES

APPEAL 19.01.110
AUTHORITY 19.01.030
BILLING AND COLLECTION 19.01.070
CLASSIFICATIONS OF CUSTOMERS 19.01.060
CONSTRUCTION, NEW 19.01.100; EROSION CONTROL, 19.20
CREATION 19.01.020
CUSTOMER CLASSIFICATIONS 19.01.090
DEFINITIONS 19.01.040, 19.10
DISCHARGE 19.40
MANAGEMENT 19.30
PENALTY 19.01.130
PURPOSE AND NECESSITY; AUTHORIZATION 19.01.010
RATES AND CHARGES 19.01.050

STREETS AND SIDEWALKS

See also SUBDIVISIONS
ENCROACHMENT
- Application 13.24.030
- Conditions
  - mandatory 13.24.050
  - optional 13.24.060
- Council action 13.24.040
- Mailboxes, neighborhood, permitted 13.24.075
- Privileges designated 13.24.020
- Public Art 9.76.230, 9.65.020
- Responsibility, liability, exceptions 13.24.070
- Statutes adopted 13.24.010
- Violation, penalty 13.24.080

EXCAVATION AND OPENING
- Bond 13.10.040
- Definitions 13.10.010
- Emergency 13.10.090
- Fees 13.10.070
- Insurance 13.10.050
- Limited in new streets 13.10.080
- Permit
  - denial 13.10.110
  - not required 13.10.030
  - required 13.10.020
- Regulations 13.10.060
- Settlement of pavement and surfacing 13.10.100

HOUSE NUMBERING
- Information requirement 13.28.080
- Map 13.28.040
- Placement 13.28.060
- Responsibility 13.28.050
- Second floor 13.28.070
- Violation, penalty 13.28.090

OBSTRUCTION
- Litter, vegetation prohibited when 13.16.010
- Removal responsibility 13.16.020

PAPER DISTRIBUTION PROHIBITED, WHEN 13.16.030
SELLING, VENDING ON, PROHIBITED 13.12.060
SIDEWALKS
- Construction
  - deferral of 13.04.020
  - design 13.04.030
- Defacing 9.68.050
- Installation, general 13.04.010
- Obstruction See OBSTRUCTION
- Skateboards, roller skates, roller skis, in-line skates, etc. restrictions 18.12.025
- Snow, ice removal responsibility 13.20.010
- Spitting on 9.68.040
- Statutes adoption 13.04.010
- Storage on, restrictions 13.20.020
- Violation, penalty 9.68.060

STREETS
Alley use regulations 10.40.040
Barricade, light, tampering with prohibited 13.12.040
Boxes, roll-off, in the public right-of-way 13.12.055
Conduct 9.56.050
Consumption of intoxicating liquor 9.52.030
Dumpsters in the public right-of-way 13.12.055
Encroachment See ENCROACHMENT
Excavation See EXCAVATION AND OPENING
Fires prohibited 13.12.010
Game playing in, prohibited 13.12.020
Hauling restrictions 13.12.050
Light, warning, required when 13.12.030
Mobile Food Establishments 13.12.066
Name
change, by ordinance 13.28.030
council authority 13.28.010
hearing, notice 13.28.020
Obstruction See OBSTRUCTION
Opening See EXCAVATION AND OPENING
Skateboards, roller skates, roller skis, in-line skates, etc. restrictions 13.12.025
Superintendent, excavation supervision 13.08.020
Vacation
fee 13.32.020
utility reservation 13.32.010
Violation, penalty 13.12.070

SUBDIVISIONS

See also STREETS AND SIDEWALKS
APPLICABILITY 17.04.015
BLOCKS, CROSSWALKS WHERE 17.12.170
CHAPTER PURPOSE 17.04.010
DEFINED 17.08.070
DESIGN REQUIREMENTS 17.12
ENVIRONMENTALLY SENSITIVE AREAS 17.12.290
FINAL PLAT
Compliance with state statutes required 17.20.040
Copies, modifications 17.20.030
Review 17.20.020
Submission, time limitation 17.20.010
HIGHWAY
See also STREET
Limited access, design requirements 17.12.040
Major, defined 17.08.030
IMPROVEMENT
Performance bond required 17.04.020
Utility See UTILITY
LOT
At right angle to adjoining lot 17.12.220
Conformance with municipal boundaries 17.12.250
Corner 17.12.200
Dimensions 17.12.190
Double frontage, permissible when 17.12.260
Generally 17.12.180
Line 17.12.230
Major 17.08.070
Minor 17.08.080
Re-subdividable 17.12.240
Street access requirement 17.20.210

MONUMENTS REQUIRED 17.24.010
PENALTIES, REMEDIES 17.04.060
PLAN COMMISSION See PLAN COMMISSION
PLAT
Extra territorial, approval jurisdiction 17.08.020
Final See FINAL PLAT
Preliminary See PRELIMINARY PLAT
Recordation, exceptions 17.04.040
Type filed, compliance required 17.04.030
PROCEDURES
Condominium plats 17.20.035
Consolidating parcels 17.20.060
Consultation, preliminary 17.20.010
Creating additional lots in platted subdivisions 17.20.050
Fees 17.20.070
Plats with extraterritorial plat approval jurisdiction 17.20.040
Subdivision
major 17.20.020
minor 17.20.030
PUBLIC SITE, LAND RESERVATION 17.12.270
RAILROAD RIGHT-OF-WAY 17.12.040
SEWER See UTILITY SIDEWALKS 17.12.280
STREETS
See also HIGHWAY
Alley 17.12.150
Arrangement 17.12.030
Collector, defined 17.08.010
Cul-de-sac, dead-end 17.12.110
Curve
horizontal 17.12.080
tangent required when 17.12.090
Defined 17.08.060
Design, generally 17.12.020
Grade 17.12.070
Grading 17.24.050
Half-street 17.12.130
Intersections 17.12.140
Major
defined 17.08.030
design requirements 17.12.050
Marginal access, defined 17.08.040
Minor, defined 17.08.050
Names 17.12.100
Reserve strip 17.12.120
Tree plan compliance required 17.12.125
Width specifications 17.12.060
SUBMITTAL REQUIREMENTS
Consultation, preliminary 17.16.010
Drawing contents, specifications 17.16.020
UTILITY
Installation procedure 17.24.020
Sewer, sanitary, requirements 17.24.040
Technical requirements 17.24.030
Underground required, exceptions 17.24.060
VARIANCES, WHEN PERMITTED 17.04.050
ZONING ORDINANCE, COMPLIANCE WITH 17.12.015

SUPERVISOR OF INSPECTIONS See BUILDING INSPECTOR

SUSTAINABILITY Sustainability Advisory Committee 2.06

SWIMMING POOLS

APPROVAL OF HEALTH DEPARTMENT 16.04.270
CITY SWIMMING POOL
Presence after hours 9.76.175
CONSTRUCTION & DESIGN 16.04.260
DEFINITIONS 16.04.230
FENCING 16.04.250
PERMIT REQUIRED 16.04.240

SYNTHETIC CANNABINOID PROHIBITED 9.375

- T -

TATTOOING AND BODY PIERCING

ADMINISTRATION 5.58.030
APPEALS 5.58.080
APPLICABILITY 5.58.010
DEFINITIONS 5.58.020
HEALTH AND SANITARY REQUIREMENTS 5.58.050
PERMIT REQUIRED 5.58.040
RECORD RETENTION 5.58.070
REGULATIONS, RULES AND LAWS ADOPTED BY REFERENCE 5.58.100
TEMPORARY FACILITY OR TEMPORARY COMBINED FACILITY 5.58.060
VIOLATION -- PENALTIES 5.58.090

TAX

PAYMENT DEADLINE REVISION 3.12.020
ROLL, COMPUTATION, PAYMENT RECEIPT 3.12.010

TAXI

See FOR-HIRE VEHICLE

TELEVISION

See CABLE TELEVISION
See ZONING

TENNIS COURT See ZONING

THEATER

See also PERFORMANCE, PUBLIC
ZONING DEFINED 5.46.020
LICENSE
Application, conditions 5.46.030
Fee 5.46.050
Required 5.46.010
Revocation 5.46.040
VIOLATION, PENALTY 5.46.060

THEFT, RETAIL

DEFINITIONS 9.62.010
DETENTION 9.62.030
EVIDENCE 9.62.040
PENALTY 9.62.060
RETAIL THEFT 9.62.020
SEVERABILITY 9.62.050

TOBACCO VENDOR See CIGARETTE VENDOR

TOURIST HOME See ZONING

TRACTOR

TRANSPORTATION OF 10.40.080

TRAFFIC

See also PARK
See SNOW
ACCIDENT REPORT
Enforcement 10.40.110
Filing 10.40.100
ANNEXED AREAS, REGULATIONS 10.04.055
CHAPTER CONSTRUCTION 10.04.050
CITATION, UNIFORM 10.40.120
COLLEGE GROUNDS REGULATIONS 10.40.070
EXHIBITION DRIVING 10.40.170
GRAND AVENUE BRIDGE RESTRICTIONS 10.16.010
MOTOR-DRIVEN CYCLE, ALL-TERRAIN VEHICLE See VEHICLE
NONCOMPLIANCE WITH POLICE 10.12.010
PARKING See PARKING
PUBLIC EMPLOYEE REGULATIONS 10.12.030
RAILROAD See RAILROAD
RECKLESS DRIVING see EXHIBITION DRIVING
RIGHT TURNS PROHIBITED WHERE 10.30.010
SCHOOL GROUNDS, REGULATIONS 10.40.055
SIGN, SIGNAL, MARKING
Erection, maintenance 10.12.040
Removal of unofficial 10.12.050
SNOW EMERGENCY REGULATIONS See SNOW
SPECIAL REGULATIONS, RECORD 10.12.020
STATE STATUTE ADOPTION
Certain provisions incorporated by reference 10.04.050
Forfeiture law 10.04.010
Sections designated 10.04.020
UNLAWFULLY PARKED VEHICLE, REMOVAL OF 10.12.060
VIOLATION, PENALTY
Conformance with state statute 10.44.020
Continued violations 10.44.060
Forfeiture 10.44.010
Late payment, penalty 10.44.070
Parking 10.44.050
Special local regulations 10.44.030
WEIGHT LIMITATION, SPECIAL, SEASONAL 10.40.090

TRAILER See MOBILE HOME CODE

TRANSIENT MERCHANTS-5.38 Repealed by ordinance #4394, August 24, 1983.

TRANSIENT PHOTOGRAPHERS-5.40 Repealed by ordinance #4394, August 24, 1983.

TRANSIT COMMISSION

CREATED 2.60.010
MEETINGS 2.60.040
MEMBER, TERM, QUALIFICATION 2.60.020
POWERS, DUTIES 2.60.030

TRASH See MANAGEMENT OF WASTE AND RECYCLING

TREASURER, CITY

CEMETERY FUND DONATION ACTION 3.08.010
DOG, CAT TAG ISSUANCE 6.04.020
ROOM TAX
Administration authority 3.20.030
Permit issuance 3.20.050
TAX ROLL RECEIPT PRINTING SUPERVISION 3.12.010
TRAFFIC FINE ACTION 10.40.150

TREE

ACTS PROHIBITED 8.20.060
DEFINITIONS 8.20.030
DIRECTOR DEFINED 8.20.030
DUTCH ELM DISEASE DEFINED 8.20.030
FORESTER, CITY
Appointment, powers, duties generally 8.20.040
Defined 8.20.030
Nuisance abatement, notice 8.20.070
Permit issuance 8.20.050
NUISANCE
Abatement 8.20.070
Designated 8.20.100
Public, defined 8.20.030
OAK MAINTENANCE 8.20.090
PARK DEFINED 8.20.030
PERMIT REQUIRED WHEN 8.20.050
PLACE, PUBLIC, DEFINED 8.20.030
PLANTING STRIP DEFINED 8.20.030
PURPOSE OF PROVISIONS 8.20.020
TITLE OF PROVISIONS 8.20.010
TRIMMER See TREE TRIMMER
VIOLATION, PENALTY 8.20.110

TREE TRIMMER

LICENSE
Liability insurance required 5.52.020
Required, application 5.52.010
Revocation, when 5.52.030
Violation, penalty 5.52.040

TRESPASS

CONSTRUCTION SITE 9.61.030
DWELLINGS 9.61.020
LAND 9.61.010
PENALTIES 9.61.040

TRUANCY See MINOR

TRUCK See ZONING

- U -

USED CAR LOT See ZONING

UTILITY APPEALS BOARD

AUTHORITY 2.50.030
DECISIONS, BOARD 2.50.050
ESTABLISHMENT 2.50.010
MEMBERSHIP, ORGANIZATION 2.50.020
PROVISIONS, INTERPRETATION OF 2.50.040

UTILITY, PUBLIC

See also ZONING
OBTAINING SERVICE BY FRAUD
Applicability 9.78.020
Unlawful acts designated 9.78.010
Violation, penalty 9.78.030
UNDERGROUND UTILITIES REQUIRED
Adaptation required 8.44.020
Area affected 8.44.030
Purpose 8.44.010
Violation, penalty 8.44.040

VEHICLE

ABANDONED
Defined 10.42.020
Removal and storage 10.42.030
Sale of 10.42.040
State statutes adopted 10.42.010
Unlawful 10.42.050
ELECTRIC
Charging Hubs Tables XII
Penalty 10.44.050
FOR HIRE See FOR HIRE VEHICLE
HEAVY, PARKING OF 10.24.015
JUNKED See JUNKED MOTOR VEHICLE
MOTOR-DRIVEN CYCLE, ALL-TERRAIN VEHICLE
See also TRAFFIC
Regulations generally 10.40.160
NEIGHBORHOOD ELECTRIC
Definitions 10.10.020
License 10.10.060
Operation 10.10.050
Penalty 10.10.070
Permitted users 10.10.040
Purpose 10.10.010
Use permitted on city streets 10.10.030
SNOW EMERGENCY REGULATIONS See SNOW
UNATTENDED
Generally 10.40.010
Keys left in 10.40.020
Storage 10.40.030
UNLAWFULLY PARKED, REMOVAL OF 10.12.060

VENDOR, SIDEWALK CART FOOD

SIDEWALK CART FOOD VENDOR 13.12.065

WAGE
MINIMUM See MINIMUM WAGE
PREVAILING See PROCUREMENT

WATERWORKS

AGENT DEFINED 14.04.020
BILLING
Combined metering 14.20.025
Dates designated 14.20.040
Late payment charge 14.20.020
Lateral installation charge 14.20.150
Leak, determination 14.08.090
Lien on property, when 14.20.030
Meter failure, determination 14.12.050
Procedure 14.20.010
Reconnection charge 14.20.070
Service contract 14.20.105
Unmetered service, determination 14.20.090

BULK WATER 14.20.140
CONNECTION
- Cross 14.08.115
- Disconnection 14.08.080
- Leak, repair 14.08.090
- Location, recordation 14.04.050
- Permit, issuance 14.04.060
- Single premises service 14.08.060

COUNCIL DEFINED 14.04.020
DAMAGE, LIABILITY 14.04.080
DEFINITIONS 14.04.020
DEPARTMENT, DEFINED 14.04.020
FIRE PROTECTION SERVICE
- Private
  - generally 14.08.130
  - rate schedule 14.20.100
- Public 14.20.050

HYDRANT
- Connection rates 14.20.140
- Opening 14.16.040

INSTALLATION
- Application, contents 14.08.030
- Cost assessment 14.08.050
- Water lateral 14.20.150
- When 14.08.040

LEAD SERVICE LINE REPLACEMENT 14.04.110
LEAKAGE
- Billing determination 14.08.090
- Notification of 14.12.060
- Repair 14.08.090

MAIN
- Defined 14.04.020
- Ownership See PIPE
- Repairs to 14.08.095

METER
- Complaint testing 14.12.070
- Failure to read 14.12.040
- Failure to register 14.12.050
- Inspection of premises 14.12.035
- Installation of 14.12.010
- Rates 14.20.060
- Remote reading register 14.12.080
- Removal of 14.12.030
- Repairs to 14.12.020
- Service piping 14.12.015
- Surreptitious use of water 14.12.090

OFFICE DEFINED 14.04.020
OWNER DEFINED 14.04.020
PIPE
- Depth 14.08.065
- Ownership 14.08.010

PREMISES DEFINED 14.04.020
PROTECTIVE DEVICES 14.08.105

SERVICE
Alteration, addition procedure 14.08.070
Billing See BILLING
Connection See CONNECTION
Defined 14.04.020
Frozen
precautionary procedure, billing 14.16.030
thawing, responsibility 14.16.010
Initiation fee 14.20.055
Installation See INSTALLATION
Laterals, maintenance, replacement 14.16.050
Lead Service Line 14.04.110
Outside city limits
application, rate 14.20.130
generally 14.08.140
Pipe See PIPE
Public 14.20.135
Rules and regulations, general 14.04.025
Seasonal 14.20.095
Suburban 14.20.110
Unit of, defined 14.04.020
Unmetered 14.20.090
Vacation of premises 14.08.085
SEWER, OBSTRUCTION, PROHIBITED 14.04.040
SHUTOFF VALVE
Location, recordation 14.04.050
Required, maintained 14.08.100
Stop, waste 14.08.110
SPRINKLING BAN AUTHORIZED WHEN 14.04.090
STATE STATUTES ADOPTED 14.08.020
STREET REPAIRS 14.08.120
SUBDIVISION INSTALLATION 14.08.150
VIOLATION, PENALTY 14.08.070
WASTE PROHIBITED 14.04.030
WELL ABANDONMENT PROCEDURES 14.04.100
WELLHEAD PROTECTION 14.10
WELL OPERATION PERMIT 14.04.100

WATERWAYS AND PARKS COMMISSION

COMPOSITION 2.64.030
CREATION 2.64.010
DUTIES AND RESPONSIBILITIES 2.64.050
MEETINGS 2.64.060
PROCEDURE 2.64.040
PURPOSE AND INTENT 2.64.020

WEAPON See FIREARM

WEED
See also YARD
CITY ACTION 8.28.040
DESTRUCTION NOTICE
Published 8.28.050
Special 8.28.070
ENFORCEMENT DATES 8.28.080
OBJECTIONABLE SPECIES 8.28.030
PROVISIONS APPLICATION 8.28.060
VIOLATION, PENALTY 8.28.110
WAIVERS 8.28.105
YARD, LAWN REGULATION 8.28.100

WEIGHTS AND MEASURES

FALSE PROHIBITED 9.80.010
VIOLATION, PENALTY 9.80.010

FEE ASSESSMENT 5.62.020
FEE PAYMENT 5.62.040
NOTICE OF INVOICE 5.62.030
PURPOSE 5.62.010

WETLANDS See SHORELAND-WETLANDS

WHOLESALE ESTABLISHMENT See ZONING

- Y -

YARD See ZONING

- Z -

ZONING

ACCESSORY USES
- Accessory building, one-and two-family dwelling, standards 18.30.030
- Determination 18.30.020
- Purpose 18.30.010
- Standards, specific 18.30.040

ADMINISTRATION AND ENFORCEMENT
- Administration defined 18.50.010
- Administrator, zoning, duties of 18.50.020
  - Building permits 18.50.040
  - Certificate
    - of occupancy 18.50.050
    - of occupancy, temporary 18.50.060
    - of zoning compliance 18.50.030
- Enforcement and violation 18.50.070
- Fees 18.50.080

AMENDMENTS AND REZONING
- Amendment initiation 18.65.020
- Community living arrangements 18.65.060
- Conditions may be attached 18.65.040
- Fact finding 18.65.050
- Procedure 18.65.030
- Purpose 18.65.010

APPEALS, BOARD OF
- Board created 18.55.010
- Board decision, when final 18.55.060
- Court review 18.55.070
- Hearing, notice of 18.55.040
- Membership 18.55.020
- Organization and rules 18.55.030
- Powers 18.55.050

CONDITIONAL USES
- Authority to impose conditions 18.35.030
- Procedure 18.35.020
- Provisions
  - general 18.35.040
  - specific 18.35.050
- Purpose 18.35.010

DEFINITIONS
Definitions 18.02.020
Interpretations, general 18.02.010
DISTRICTS
C -- Commercial district
Districts, established 18.05.020
Purpose 18.05.010
Restrictions, general 18.05.060
Standards, design and dimensional 18.05.050
Uses
established 18.05.030
general, defined 18.05.040
CV - Conservancy district
Conditional uses 18.08.030
Purpose 18.08.010
Uses permitted 18.08.020
F -- Floodplain overlay district
Administration 18.11.160
Amendments
general 18.11.230
procedures 18.11.230
Appeals, board of
appeals 18.11.190
disputes, boundary 18.11.190
powers and duties 18.11.190
review of permit denials 18.11.200
variance 18.11.190
Authorization, statutory 18.11.010
Definitions 18.11.050
Enforcement 18.11.240
Finding of fact 18.11.020
Floodfringe areas
non-conforming uses and structures
modification or addition to 18.11.150
sewage disposal systems 18.11.150
variance 18.11.150
wells 18.11.150
standards for development in 18.11.110
accessory structures and uses 18.11.110
commercial uses 18.11.110
disposal sites, solid waste 18.11.110
manufacturing and industrial uses 18.11.110
materials, deposition of 18.11.110
mobile and manufactured homes 18.11.110
residential uses 18.11.110
sewage systems 18.11.110
storage materials 18.11.110
utilities, streets and bridges 18.11.110
variance 18.11.150
wells 18.11.110
Floodfringe district (FF)
applicability 18.11.100
uses permitted 18.11.100
Floodproofing 18.11.210
Floodway areas
modification or addition to nonconforming structure 18.11.140
sewage disposal system 18.11.140
standards for development in
fills, deposition of materials 18.11.090
general 18.11.090
structures 18.11.090

uses prohibited 18.11.090
utilities, streets and bridges 18.11.090
wells 18.11.140
Floodway district (FW)
applicability 18.11.080
uses permitted 18.11.080
General floodplain district (GFP)
applicability 18.11.120
determining limits 18.11.120
development in, standards for 18.11.120
uses permitted 18.11.120
Information, public 18.11.220
Penalties 18.11.240
Plan commission 18.11.180
Procedures, administrative
compliance, certificate of 18.11.170
land use permit 18.11.170
permits, other 18.11.170
Provisions, general
abrogation 18.11.060
annexed areas 18.11.060
areas to be regulated 18.11.060
boundaries, locating 18.11.060
compliance 18.11.060
districts, establishment of 18.11.060
interpretation 18.11.060
lands, removal of 18.11.060
liability, warning and disclaimer of 18.11.060
map, official 18.11.060
municipalities and state agencies regulated 18.11.060
severability 18.11.060
Purpose, statement of 18.11.030
Standards applicable to all floodplain districts
development, chapter 30, 31, Wis. Stats. 18.11.070
general 18.11.070
hydraulic and hydrologic analyses 18.11.070
watercourse alterations 18.11.070
Title 18.11.040
Uses, nonconforming 18.11.130
H -- Highway overlay district
Purpose 18.09.010
Setback requirements for buildings and structures 18.09.040
Standards, design and dimensional 18.09.030
Uses generally 18.09.020
I -- Industrial districts
Districts, establishment of 18.06.020
Purpose 18.06.010
Uses
Definition of general 18.06.040
Establishment of 18.06.030
Restrictions, general 18.06.060
Standards, design and dimensional 18.06.050
P -- Public properties district
Procedure 18.07.030
Provision, general 18.07.040
Purpose 18.07.010
Uses permitted 18.07.020

PD -- Planned development
Standards and special requirements for
Commercial and industrial planned development 18.10.060
Residential planned development 18.10.050
Procedure 18.10.030
Provisions, general 18.10.020
Purpose 18.10.010
Review criteria 18.10.040
R -- Residential districts
Districts, establishment of 18.04.020
Purpose 18.04.010
Standards, design and dimensional 18.04.040
Uses, establishment of 18.04.030
R-1B -- Mobile home park districts
Accessory structures, detached 18.13.065
Building height limit 18.13.040
Density 18.13.050
Non-conforming 18.13.110
Parking, off-street requirements 18.13.100
Purpose 18.13.010
Recreation areas 18.13.090
Separation between mobile homes required 18.13.060
Setback required 18.13.070
Spaces and facilities, minimum 18.13.080
Uses
Conditional 18.13.030
Permitted 18.13.020
SW -- Shoreland-Wetlands Overlay District
Abrogation and greater restrictions 18.12.060
Administrative provisions 18.12.120
Amending shoreland-wetland zoning regulations 18.12.140
Appeals, board of 18.12.130
Authorization, statutory 18.12.010
Compliance 18.12.040
Definitions 18.12.030
Enforcement and penalties 18.12.150
Interpretation 18.12.070
Findings of fact and purpose 18.12.020
Municipalities and state agencies regulated 18.12.050
Shoreland-wetland zoning district 18.12.080
Structures and uses, nonconforming 18.12.110
Uses
Nonconforming 18.12.110
Permitted 18.12.090
Prohibited 18.12.100

DISTRICTS AND MAPS
Districts established 18.03.010
R-1A Non-sewered one-family district
R-1 One-family district
R-2 One- and two-family district
R-M Mixed residential district
R-3 Low-rise multiple-family district
R-4 High-rise multiple-family district
R-1B Mobile home park district
C-1A Office/professional district
C-1 Limited neighborhood shopping district
C-2 Neighborhood shopping district
C-3 Community shopping district
CBD Central business district
I-1 Light industrial district
I-2 Heavy industrial district
P Public properties district
CV Conservancy district
H Highway overlay district
PD Planned development overlay district
F Flood plain overlay district
W Shoreland-wetlands overlay district
Interpretation
and conflict 18.03.060
of district boundaries 18.03.030
Map of districts 18.03.020
Provisions, scope of 18.03.050
Regulations, application of 18.03.040
Repeal 18.30.090
Severance clause 18.30.070
Vested right 18.30.080
MIXED-USE DEVELOPMENT OVERLAY DISTRICT
Purpose 18.15.010
General Provisions 18.15.020
Procedure 18.15.030
Review Criteria 18.15.040
Standards and Special Requirements for a MX District 18.15.050
NONCONFORMING USES, STRUCTURES AND LOTS
Applicability 18.40.050
Grandfather rights 18.40.060
Purpose 18.40.010
Lots, nonconforming 18.40.040
Structures, nonconforming 18.40.030
Uses, nonconforming 18.40.020
OFFICIAL MAP
Changes and additions 18.60.050
Effect 18.60.040
Established 18.60.020
Filing 18.60.030
Permits, building 18.60.070
Purpose 18.60.010
Subdivision and plat conformity 18.60.060
Violations and penalty 18.60.080
PARKING AND LOADING REQUIREMENTS, OFF-STREET
Loading requirements, off-street 18.25.060
Parking
design standards, off-street 18.25.040
residential off-street 18.25.050
requirements, off-street 18.25.030
Provisions, general 18.25.020

Adequate spacing between rows of racks:

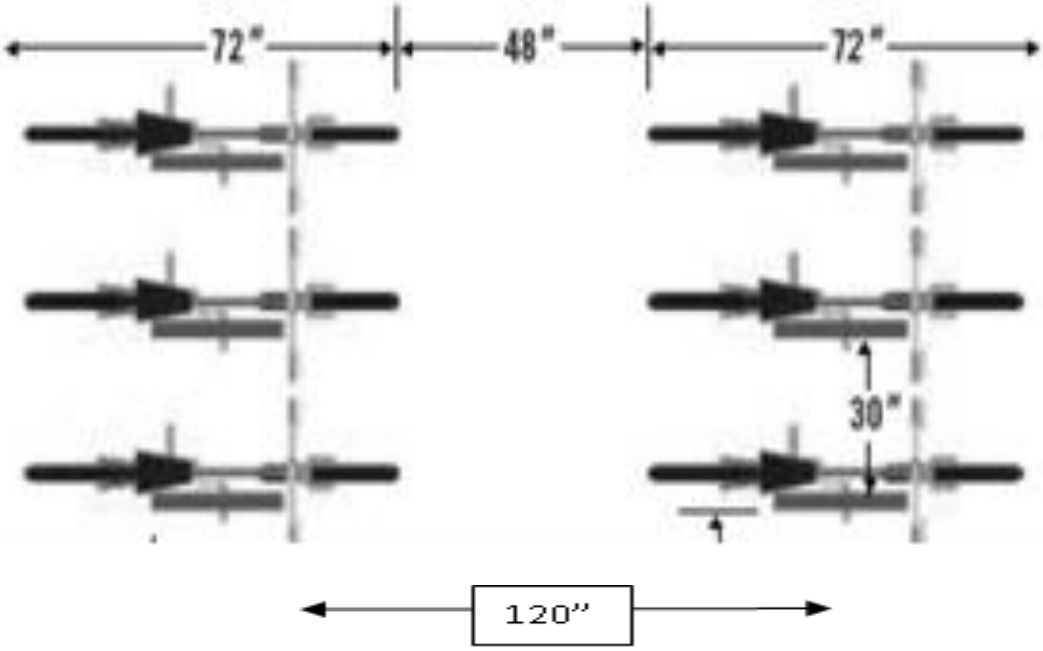

Adequate spacing between racks:

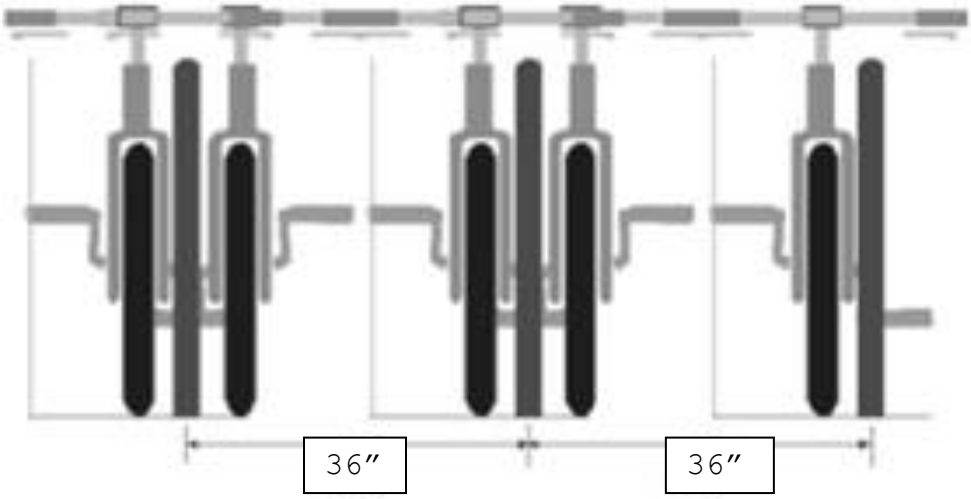

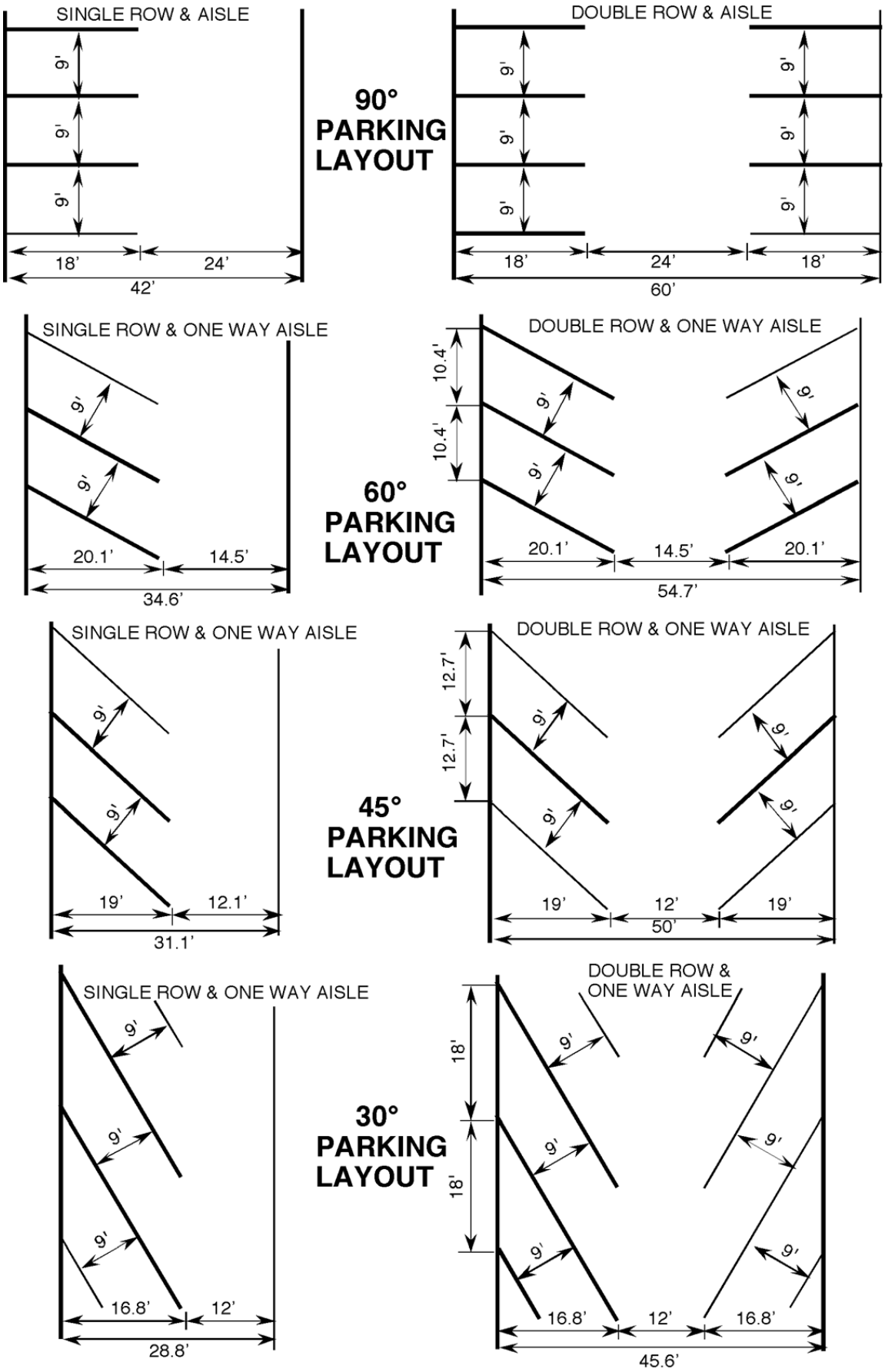
SINGLE ROW & AISLE
9'
9'
9'
18'
24'
42'
90° PARKING LAYOUT
DOUBLE ROW & AISLE
9'
9'
9'
9'
9'
9'
18'
24'
18'
60'
SINGLE ROW & ONE WAY AISLE
9'
9'
20.1'
14.5'
34.6'
60° PARKING LAYOUT
DOUBLE ROW & ONE WAY AISLE
10.4'
10.4'
9'
9'
9'
9'
20.1'
14.5'
20.1'
54.7'
SINGLE ROW & ONE WAY AISLE
9'
9'
19'
12.1'
31.1'
45° PARKING LAYOUT
DOUBLE ROW & ONE WAY AISLE
12.7'
12.7'
9'
9'
9'
9'
19'
12'
19'
50'
SINGLE ROW & ONE WAY AISLE
9'
9'
9'
16.8'
12'
28.8'
30° PARKING LAYOUT
DOUBLE ROW & ONE WAY AISLE
18'
18'
9'
9'
9'
9'
9'
9'
16.8'
12'
16.8'
45.6'

PLAN COMMISSION
- Authority and functions 18.70.010
- Duties and powers 18.70.020

SITE PLANS
- Procedure 18.45.030
- Purpose 18.45.010
- Required, when 18.45.020
- Review criteria 18.45.050
- Submittal requirements 18.45.040

SPECIAL PROVISIONS
- Adult book store or adult cabaret 18.20.200
- Buildings
  - One per lot 18.20.020
  - Temporary, use of 18.20.140
  - Unsafe 18.20.010
- Height requirements exception 18.20.130
- Lots
  - Area allocation 18.20.050
  - Flag, use of 18.20.160
  - Lake and river frontage, requirements for 18.20.100
  - Corner, requirements for side yards on 18.20.120
  - Double frontage, requirements for 18.20.110
  - Residential, two-family, splitting of 18.20.040
- Manufactured homes 18.20.220
- Recycling facilities 18.20.210
- Rooming houses and lodging houses 18.20.180
- Sales area, temporary 18.20.150
- Screening, between districts 18.20.170
- Setbacks, special 18.20.190
- Street access 18.20.030
- Vision triangle 18.20.070
- Yard
  - Encroachments permitted 18.20.060
  - Front 18.20.080
  - Rear 18.20.090

TRADITIONAL NEIGHBORHOOD DEVELOPMENT
- Definitions 18.14.020
- Design standards 18.14.050
- General provisions 18.14.010
- Procedures 18.14.030
- Review criteria 18.14.040